# INDEX

**Foreword - Company introduction**

**Section 1 – Mini-Flush Flushing Bypass Assemblies**

**Section 2 – Taco Setter balancing**

**Section 3 – Nova Drive actuators, manifolds, thermostats and wiring centres**

**Section 4 – Nova Mix mixing valves**

**Section 5 – Air Removal**

**Section 6 – Danfoss Automatic balancing and standard commissioning valves**

**Section 7 – Danfoss Differential Pressure Control valves**

**Section 8 – Danfoss Differential Pressure Relief valves**

**Section 9 – Danfoss thermal balancing and temperature control valves**

# INTRODUCTION

Tacotherm Ltd have supplied the UK market with our full range of Taconova products for over 50 years along with the Danfoss range of hydronic controls.

Over this period Taconova products have been the preferred choice of specifiers, OEM manufacturers and distributors throughout Europe. All Taconova products are quality engineered within an ISO9001 (EN29001) environment.

Taconova is the trade name for a range of high quality innovative products for controlling and balancing HVAC water circuits which includes:

**Balancing**

**Mini-Flush Flush Bypass Assemblies–** These are UK manufactured assemblies for Fan-coil control, each assembly can be bespoke allowing for a multitude of designs and variations.

**TacoSetter AV23–** These direct reading flow measurement and balancing valves are ideal for heating and cooling circuits, especially fan coil units. The size range DN15 to DN100.

**TacoSetter Rondo AV23 –** A simple direct reading flow measurement and balancing valve, these are ideal for heating and cooling circuits (fan coils), radiators (replaces the conventional lock shield valve) and underfloor heating manifolds. DN15 straight pattern.

**Controls**

**NovaDrive Actuators** – Thermoelectric actuators to replace thermostatic radiator valves or for use on under floor heating manifolds.
These are directly compatible with our TacoSys manifolds and Novastat/ NovaMaster controls

**Mixing**

**Novamix Compact Thermostatic Mixing Valve –** this neat valve provides "safe" temperature controlled water to basins or sinks and complies with **WRAS/TMV2** requirements. 15mm compression connections are available.

**Novamix Thermostatic Mixing Valves -** provide "safe" temperature controlled water to basins, sinks, baths or group showers with either 15mm, 22mm or 28mm connections

**Venting**

**EL43 Airscoop –** Cast iron air separator to eliminate air from water in wet systems.DN20 to DN100.
**ES42 Hy -Vent –** Automatic air vent for the venting of air in heating and cooling systems.
**ER40 Vent Valves –** Automatic air vent for the venting of small quantities of air in radiators or small bore pipework.

Other Products Available in the UK include:

**Danfoss Hydronic Controls:**
Tacotherm Ltd supply a range of Danfoss control and balancing valves which includes :

AB-QM - Pressure independent control valves 10mm – 250mm
ASV-PV & ASV-PI – Automatic balancing valves – for variable flow systems. 15mm to 100mm
MSV-O & MSV-F – Manual balancing valves.
AVP – Differential control valves 15mm – 50mm
AFP – Differential pressure control valves 40mm - 250mm
AVDA – Differential pressure relief valves 15mm – 25mm
AVPA – Differential pressure control valves 15mm – 50mm
AFPA – Differential pressure control valves 40mm – 250mm

for use on fan coils and chilled beams are also supplied to customer requirements

**Comprehensive technical data sheets are available for all of the above products.**

**Extensive stocks are held at our Warehouse in Totton, Nr Southampton, Hampshire, ensuring a speedy and efficient delivery services to anywhere in the UK, generally within 24 hours.**

**Technical sales engineers are available to discuss the product range in detail and to advise on specific applications or projects.**

Working in partnership with

Product Sheet

# Pre-Fabricated Flushing Bypass Assembly for Terminal Applications Mini-Flush 40

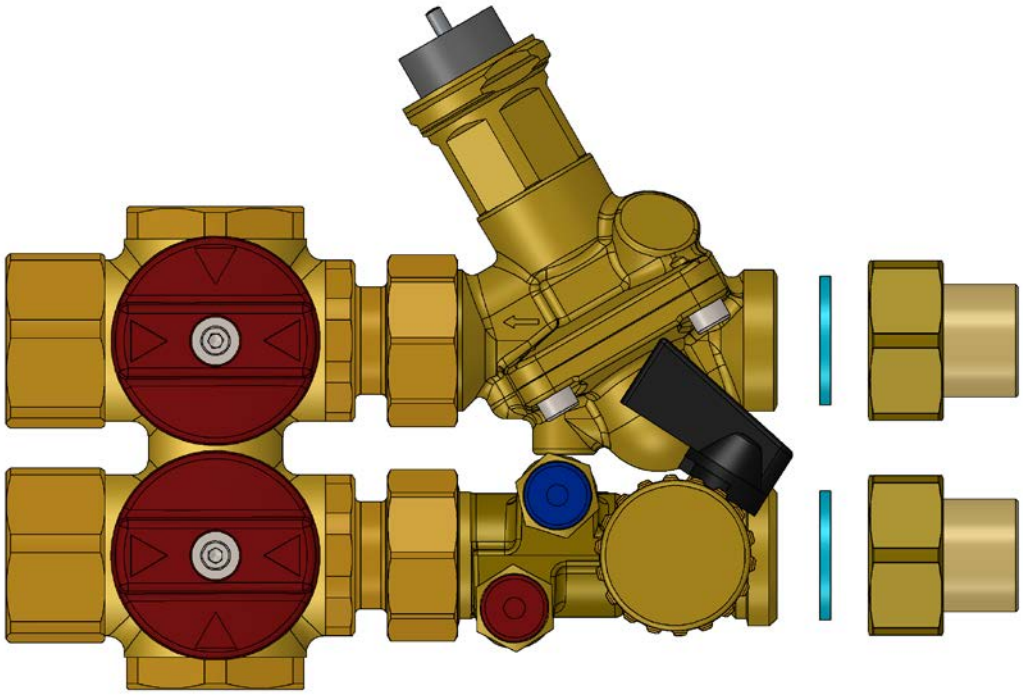

## Description

Miniflush 40 is a pre-fabricated, flushing bypass arrangement for balance, control, isolation, and operation of terminal devices. It is designed for use with fan coil units, chilled beams, and other terminal devices, where the flow is controlled via a pressure independent control valve, and isolation, drain, flushing bypass, and flow measurement is required.

Key features include:
A compact, pre-fabricated design
Factory pressure tested assembly
Each assembly is labelled with FCU location and Miniflush 40 instructions
High flow DN15 option for direct connection to CHW terminals with flows up to 0.315 l/s
Low flow option for LTHW flow rates down to 0.008 l/s
Left and right-handed versions to prevent clashes within the fan coil
A wide range of connection options, including BSP, compression, and solder connections to the coil
Danfoss AB-QM type pressure independent control valve for balance at full or partial loads
A comprehensive compatible range of actuators to enable it to be connected to a building management system or other controllers
Flow mounted drain for flushing and quick drain-downs
Flow measurement function in all sizes

Tacotherm, Unit 40, Hampshire Business Park, Brunel Road, Totton, Hampshire, SO40 3SA, UK.
T: 02380 663163 E: sales@tacotherm.co.uk

Tacotherm accept no liability for possible errors in this product sheet. Tacotherm reserve the right to alter this product without notice. This product us supplied by Tacotherm Limited

## Schematic and Design

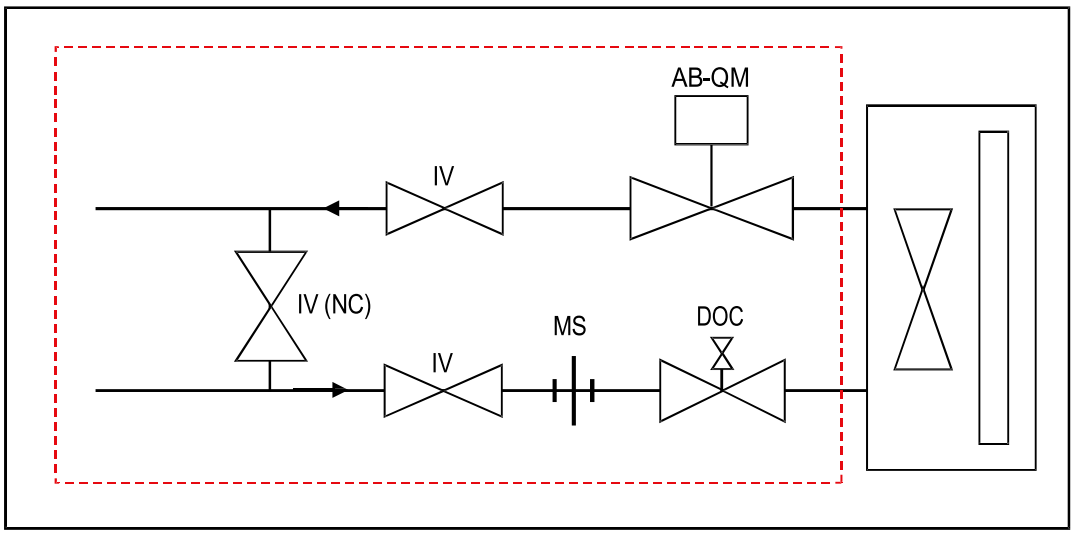


Schematic Symbol Guide

| | |
|---|---|
| AB-QM | -Pressure Independent Control Valve (actuator supplied separately) |
| DOC | -Drain point |
| IV | -Isolation valve |
| MS | -Measuring station |

## Ordering

| Type | Position of Terminal | Nominal Valve Flow Rate l/h | Recommended Q Max (l/h) | Recommended Q Min (l/h) | Orifice kVs | Connection Size | Connection Type Pipework | Connection Type Terminal | Actuator Type Modulating | Actuator Type 3-Point | Actuator Type Thermic |
|---|---|---|---|---|---|---|---|---|---|---|---|
| Miniflush 40 10LF 0.3 | Left Handed | 150 | 60 | 30 | 0.3 | 3/4" BSP | Internal Threaded | Solder | AME 110NL | AMV 110NL | TWA-Z |
| Miniflush 40 15LF 0.6 | Left Handed | 275 | 90 | 60 | 0.6 | 3/4" BSP | Internal Threaded | Solder | AME 110NL | AMV 110NL | TWA-Z |
| Miniflush 40 15LF 0.9 | Left Handed | 275 | 230 | 90 | 0.9 | 3/4" BSP | Internal Threaded | Solder | AME 110NL | AMV 110NL | TWA-Z |
| Miniflush 40 15 2.1 | Left Handed | 450 | 450 | 230 | 2.1 | 3/4" BSP | Internal Threaded | Solder | AME 110NL | AMV 110NL | TWA-Z |
| Miniflush 40 15HF 4.0 | Left Handed | 1135 | 600 | 450 | 4.0 | 3/4" BSP | Internal Threaded | Solder | AME 110NL | AMV 110NL | TWA-Z |
| Miniflush 40 15HF 5.6 | Left Handed | 1135 | 1135 | 600 | 5.6 | 3/4" BSP | Internal Threaded | Solder | AME 110NL | AMV 110NL | TWA-Z |
| Miniflush 40 10LF 0.3 | Right Handed | 150 | 60 | 30 | 0.3 | 3/4" BSP | Internal Threaded | Solder | AME 110NL | AMV 110NL | TWA-Z |
| Miniflush 40 15LF 0.6 | Right Handed | 275 | 90 | 60 | 0.6 | 3/4" BSP | Internal Threaded | Solder | AME 110NL | AMV 110NL | TWA-Z |
| Miniflush 40 15LF 0.9 | Right Handed | 275 | 230 | 90 | 0.9 | 3/4" BSP | Internal Threaded | Solder | AME 110NL | AMV 110NL | TWA-Z |
| Miniflush 40 15 2.1 | Right Handed | 450 | 450 | 230 | 2.1 | 3/4" BSP | Internal Threaded | Solder | AME 110NL | AMV 110NL | TWA-Z |
| Miniflush 40 15HF 4.0 | Right Handed | 1135 | 600 | 450 | 4.0 | 3/4" BSP | Internal Threaded | Solder | AME 110NL | AMV 110NL | TWA-Z |
| Miniflush 40 15HF 5.6 | Right Handed | 1135 | 1135 | 600 | 5.6 | 3/4" BSP | Internal Threaded | Solder | AME 110NL | AMV 110NL | TWA-Z |

Notes:
-The recommended flow rates are to enable accurate measurement of flow
-Actuators need to be ordered separately
-Options are available for connection to the pipework and terminal. Please discuss with your representative prior to ordering

Tacotherm, Unit 40, Hampshire Business Park, Brunel Road, Totton, Hampshire, SO40 3SA, UK.
T: 02380 663163 E: sales@tacotherm.co.uk

Tacotherm accept no liability for possible errors in this product sheet. Tacotherm reserve the right to alter this product without notice. This product us supplied by Tacotherm Limited

# Operational Modes

## Supply

This is the normal operation of the Mini-flush, with flow going through terminal, and out through the return, back to the system.
The AB-QM valve will balance by limiting the flow to the coil, and the actuator will control flow as per the temperature requirement.

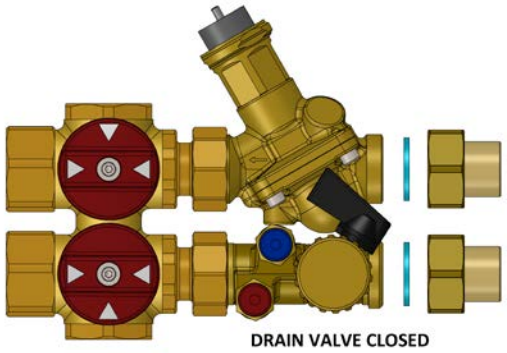


## Flushing

During system flushing, the terminal will be isolated, but a flow around the main system is required. To enable bypassing we have positioned a flushing bypass within the Mini- flush assembly, which can open a link between flow and return, to enable mainline system flow for flushing.

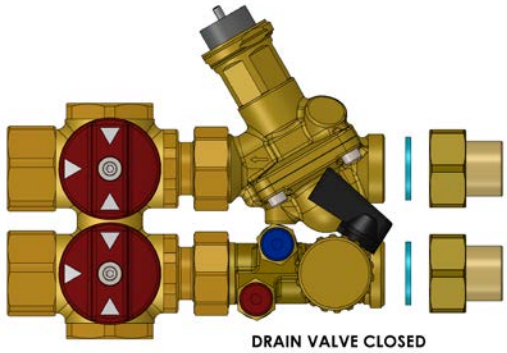


## Back Flushing

To enable flushing through the terminal, the return can be opened, with the flow and bypass isolation valves closed. The drain is then opened, to allow flow through the coil, and any coil debris will be released through the flow side drain point.

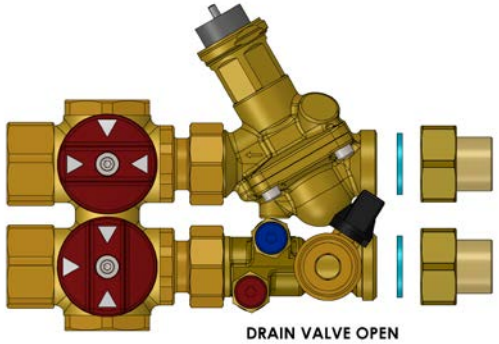


## Isolation

For a variety of reasons, it may be required to completely isolate the terminal. For this we can isolate the flow and return, and close the bypass, to remove all flow through the coil and bypass.

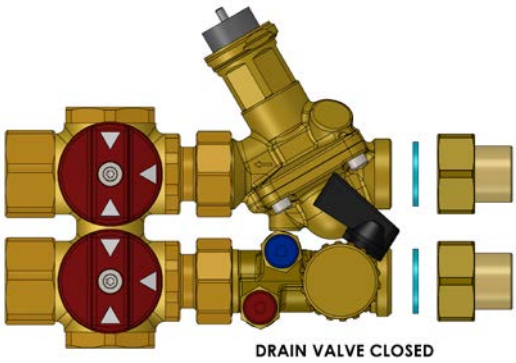


Tacotherm, Unit 40, Hampshire Business Park, Brunel Road, Totton, Hampshire, SO40 3SA, UK.
T: 02380 663163 E: sales@tacotherm.co.uk

Tacotherm accept no liability for possible errors in this product sheet. Tacotherm reserve the right to alter this product without notice. This product us supplied by Tacotherm Limited

# Pressure Independent Control Valve Specification

## Description

The precise flow control performance of the AB-QM with a Danfoss actuator provides increased comfort and superior Total Cost of Ownership because of savings made on:

- Efficient energy transfer and minimal pumping costs since there are no overflows at partial loads because of the exact pressure independent flow limitation.
- Smaller pump investments and lower energy consumption as the pump head needed are lower than in the traditional setup. With the built-in test plugs, it is easy to troubleshoot and find the optimal setpoint for the pump.
- Reduced movements of the actuator since the built-in differential pressure controller ensure the pressure fluctuations do not influence the room temperature.
- Achieving a stable temperature in a room leading to a lower average temperature at the same comfort level.
- Minimal flow complains as the valve performs as designed.
- Minimal blockage complains as the membrane design makes AB-QM less susceptible to blockage than a cartridge type constriction.
- Trouble-free segmentation of the building project. When sections of a project are finished, they can normally not be handed over to the customer with a fully functional HVAC installation. However, the AB-QM with a Danfoss actuator will automatically control the flow, even when other parts of the installation are still unfinished. It's not needed to adjust the AB-QM after finalisation of the project.
- Commissioning costs, the costs are close to zero because of a convenient setting procedure without the need for flow charts, calculations, or measuring equipment. The AB-QM valves can be set to a precise design value even when the system is up and running.
- Halved mounting costs as the AB-QM valve covers two functions, Balancing & Control

## Operation of the AB-QM Balancing and Control Valve

Differential pressure controller DPC

The differential pressure controller maintains a constant differential pressure across the control valve. The pressure difference ΔpCv (P2-P3) on the membrane is balanced with the force of the spring. Whenever the differential pressure across the control valve changes (due to a change in available pressure, or movement of the control valve) the hollow cone is displaced to a new position which brings a new equilibrium and therefore keeps the differential pressure at a constant level.

Control valve Cv

The control valve has a linear characteristic. It features a stroke limitation function that allows adjustment of the Kv value. The percentage marked on the scale equals the percentage of 100 % flow marked on the pointer. Changing the stroke limitation is done by lifting the locking mechanism and turning the top of the valve to the desired position, shown on the scale as a percentage. A blocking mechanism automatically prevents unwanted changing of the setting.

**Design**

1. Spindle
2. Stuffing box
3. Pointer
4. Control valve's cone
5. Membrane
6. Main spring
7. Hollow cone (pressure controller)
8. Vulcanized seat (pressure controller)

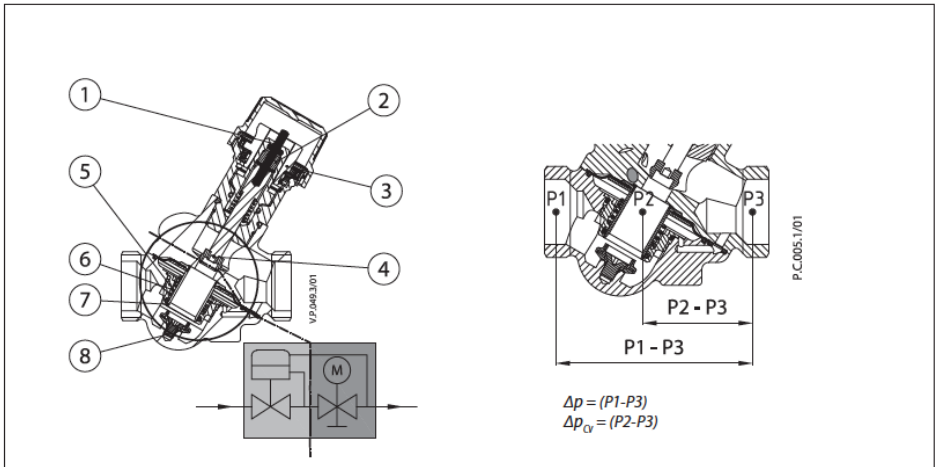


AB-QM DN 10-32

## PICV Technical Details

| Size | | 10LF | 15LF | 15 | 15HF |
|---|---|---|---|---|---|
| Flow Range l/s | Nom | 0.042 | 0.076 | 0.125 | 0.315 |
| | Min | 0.008 | 0.015 | 0.025 | 0.063 |
| Standard Setting Range | 20-100% | | | | |
| Starting Differential Pressure | kPa | 16 | 16 | 16 | 35 |
| Max Differential Pressure | Bar | 6 | 6 | 6 | 6 |
| Control Range | 1:1000 | | | | |
| Control Characteristic | Linear/Logarithmic with actuator | | | | |
| Leakage Rate | No visible leakage | | | | |
| Flow Medium | Water and water mixtures for closed heating and cooling systems according to plant type I for DIN EN14868 | | | | |
| Pressure Rating | PN | 16 | | | |
| Medium Temperature | ºC | -10…+120 | | | |
| Storage and Transport Temp | ºC | -40…70 | | | |
| Stroke | mm | 2.25 | | | |
| PICV Connection | Union Threaded/Solder | | | | |
| Body Material | DZR Brass | | | | |
| Membrane and O-Ring Material | EPDM | | | | |
| Control Valve Cone Material | CuZn40Pb3-CW614N | | | | |

Tacotherm, Unit 40, Hampshire Business Park, Brunel Road, Totton, Hampshire, SO40 3SA, UK.
T: 02380 663163 E: sales@tacotherm.co.uk

Tacotherm accept no liability for possible errors in this product sheet. Tacotherm reserve the right to alter this product without notice. This product us supplied by Tacotherm Limited

## Selection Chart

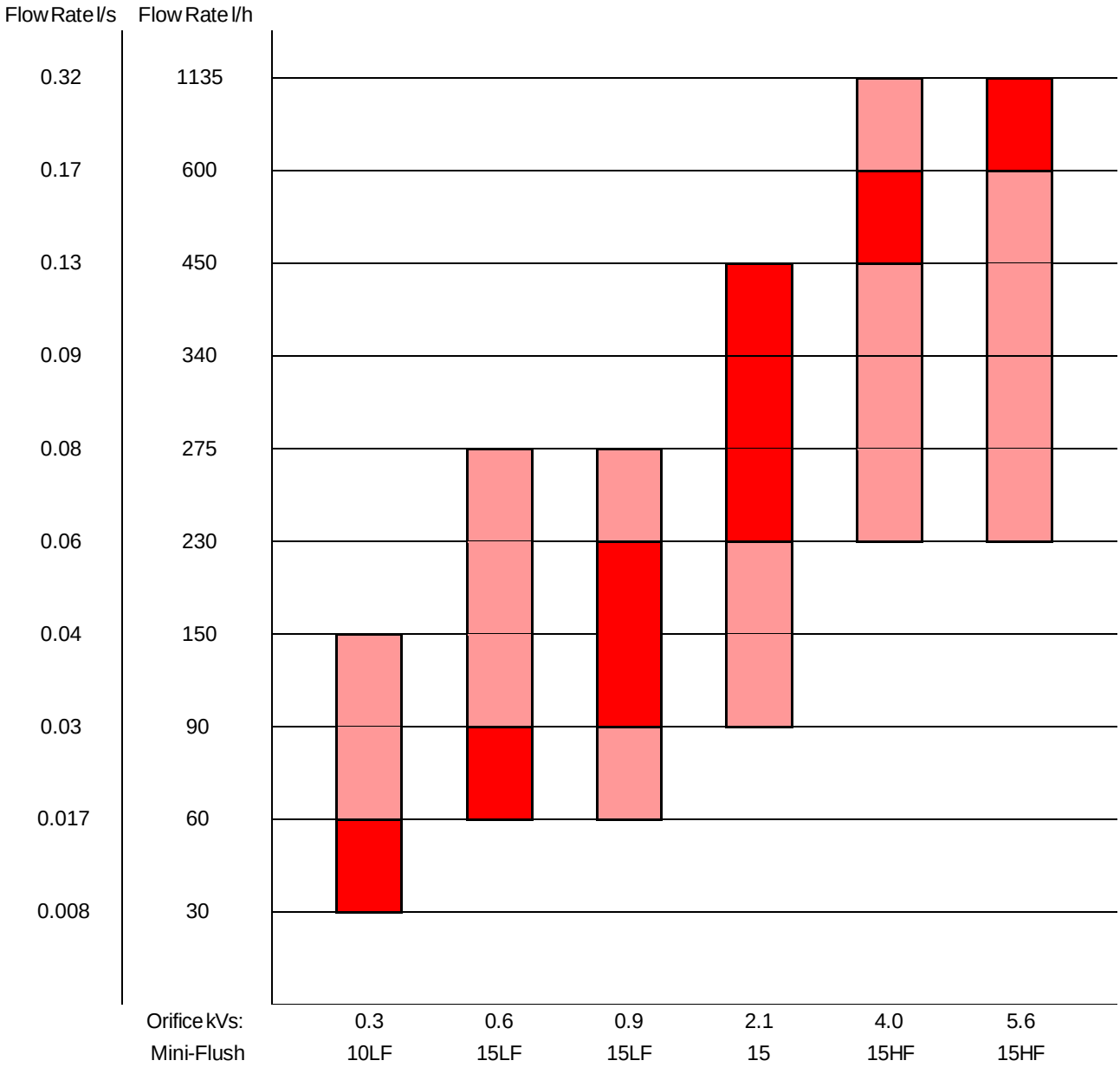


Notes:

This chart is for guidance only. Any selections must be checked with a Tacotherm representative before a final selection can be made.

To select a manifold size take your required design flow rate. Find the flow points it falls between on the flow axis, draw a line horizontally. Select the manifolds in red for optimum selection.

Where you have intersected a manifold in pink, you can select this manifold, but it may not be the optimum selection for accurate flow measurement, and you may experience high orifice pressure loss. PICV flow control performance will not be affected by selection within this range.

Tacotherm, Unit 40, Hampshire Business Park, Brunel Road, Totton, Hampshire, SO40 3SA, UK.
T: 02380 663163 E: sales@tacotherm.co.uk

Tacotherm accept no liability for possible errors in this product sheet. Tacotherm reserve the right to alter this product without notice. This product us supplied by Tacotherm Limited

# Pressure Independent Control Valve Specification

## Setting the AB-QM

The calculated flow can be adjusted easily without using special t

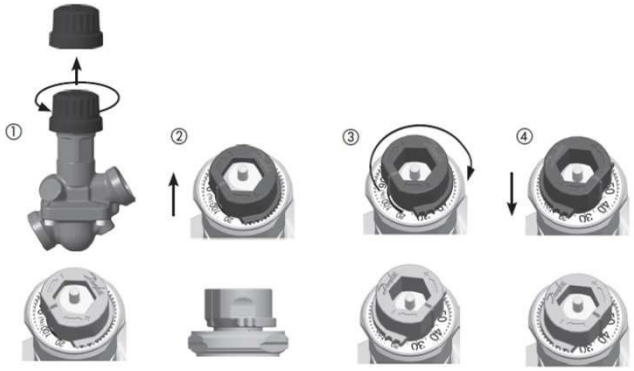


To change the presetting (factory setting is 100 %) follow the four steps below:

① Remove the blue protective cap or the mounted actuator
② Raise the grey pointer
③ Turn (clockwise to decrease) to the new presetting
④ Press grey pointer back into lock position.
After click presetting is locked.

The presetting scale indicates values from 100 % flow to 0 %. Clockwise turning would decrease the flow value, while counter-clockwise would increase it.
If the valve is a DN 15 then the nom flow = 450 l/h =100 % presetting. To set a flow of 270 l/h, you have to set: 270/450 = 60 %.

Tacotherm recommends a presetting/flow from 20 % to 100 %.
Factory presetting is 100 %.

# Verification of Flow Rate on Mini-Flush

To verify the flow rate, the following steps should be taken:

① Find the kVs of the measuring station on the orifice kVs chart
② Calculate the required pressure drop using the kVs and design flow rate, using the following formula:
$Q=Kv \times \sqrt{\Delta P}$
Note Q=m3/h, $\Delta P$=Bar
③ Plug a manometer into the test points on the measuring station
④ If you are getting the required pressure, you have the desired flow rate

A guide to the expected pressure losses can be found in the chart below:

| Manifold Type | Nominal Flow Rate l/h | Orifice Kvs | Measuring Station Pressure Drop at PICV Setting (kPa) | | | | | | | | |
|---|---|---|---|---|---|---|---|---|---|---|---|
| | | | 100% | 90% | 80% | 70% | 60% | 50% | 40% | 30% | 20% |
| Miniflush 40 10LF 0.3 | 150 | 0.3 | 25.0 | 20.3 | 16.0 | 12.3 | 9.0 | 6.3 | 4.0 | 2.3 | 1.0 |
| Miniflush 40 15LF 0.6 | 275 | 0.6 | 21.0 | 17.0 | 13.4 | 10.2 | 7.5 | 5.2 | 3.4 | 1.9 | |
| Miniflush 40 15LF 0.9 | 275 | 0.9 | 9.3 | 7.5 | 5.9 | 4.5 | 3.4 | 2.3 | 1.5 | | |
| Miniflush 40 15 2.1 | 450 | 2.1 | 4.6 | 3.7 | 2.9 | 2.3 | 1.7 | 1.1 | | | |
| Miniflush 40 15HF 4.0 | 1135 | 4.0 | 8.0 | 6.5 | 5.2 | 3.9 | 2.9 | 2.0 | 1.3 | | |
| Miniflush 40 15HF 5.6 | 1135 | 5.6 | 4.1 | 3.3 | 2.6 | 2.0 | 1.5 | 1.0 | | | |

The highlighted cells indicate the best settings for flow rate measurement

Tacotherm, Unit 40, Hampshire Business Park, Brunel Road, Totton, Hampshire, SO40 3SA, UK.
T: 02380 663163 E: sales@tacotherm.co.uk

Tacotherm accept no liability for possible errors in this product sheet. Tacotherm reserve the right to alter this product without notice. This product us supplied by Tacotherm Limited

## DN15 Mini-Flush Dimensions

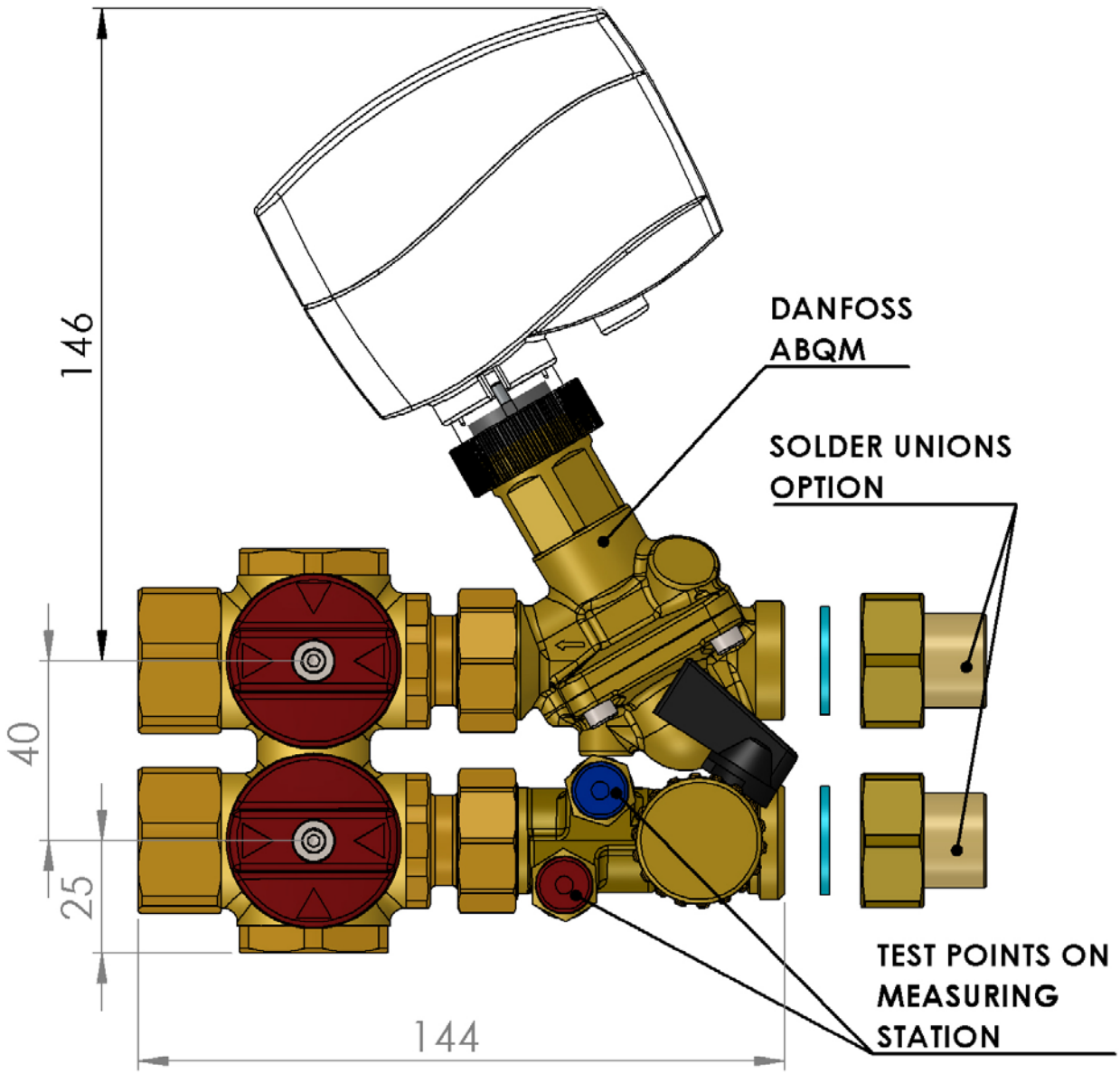

tacotherm

Working in partnership with Danfoss

**Product Sheet**

# Pre-Fabricated Flushing Bypass Assembly for Terminal Applications Mini-Flush 40 - **(Compliant to current BSRIA guidelines BG29/2021)**

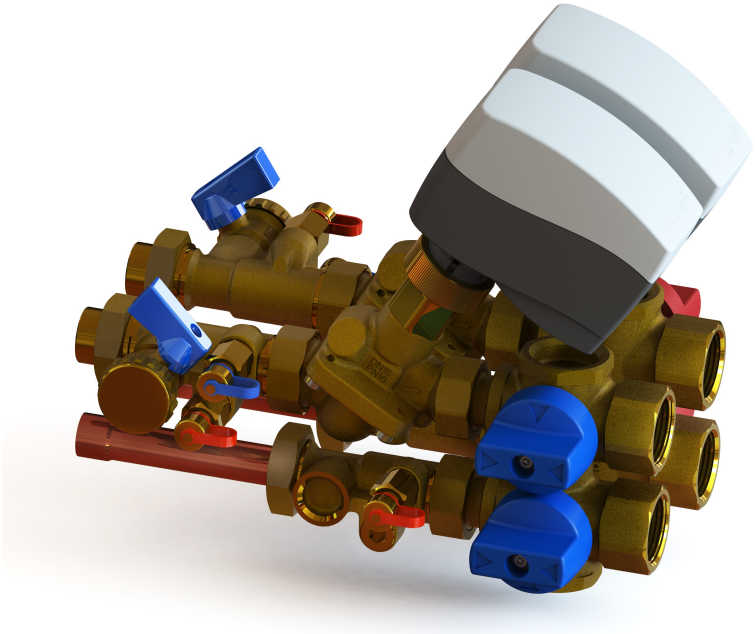

## Description

Miniflush 40 is a pre-fabricated, flushing bypass arrangement for balance, control, isolation, and operation of terminal devices. It is designed for use with fan coil units, chilled beams, and other terminal devices, where the flow is controlled via a pressure independent control valve, and isolation, drain, flushing bypass, and flow measurement is required.

Key features include:

- A compact, pre-fabricated design
- Factory pressure tested assembly
- Each assembly is labelled with FCU location and Miniflush 40 instructions
- High flow DN15 option for direct connection to CHW terminals with flows up to 0.315 l/s
- Low flow option for LTHW flow rates down to 0.008 l/s
- Left and right-handed versions to prevent clashes within the fan coil
- Wide range of connection options, including BSP, compression & solder connections to the coil
- Danfoss AB-QM type pressure independent control valve for balance at full or partial loads
- A comprehensive compatible range of actuators to enable it to be connected to a building management system or other controllers
- Flow mounted drain for flushing and quick drain-downs
- Flow measurement function in all sizes

Tacotherm, Unit 40, Hampshire Business Park, Brunel Road, Totton, Hampshire, SO40 3SA, UK.
T: 02380 663163 E: sales@tacotherm.co.uk

Tacotherm accept no liability for possible errors in this product sheet. Tacotherm reserve the right to alter this product without notice. This product us supplied by Tacotherm Limited 

## Schematic and Design (Compliant to current BSRIA guidelines BG29/2021)

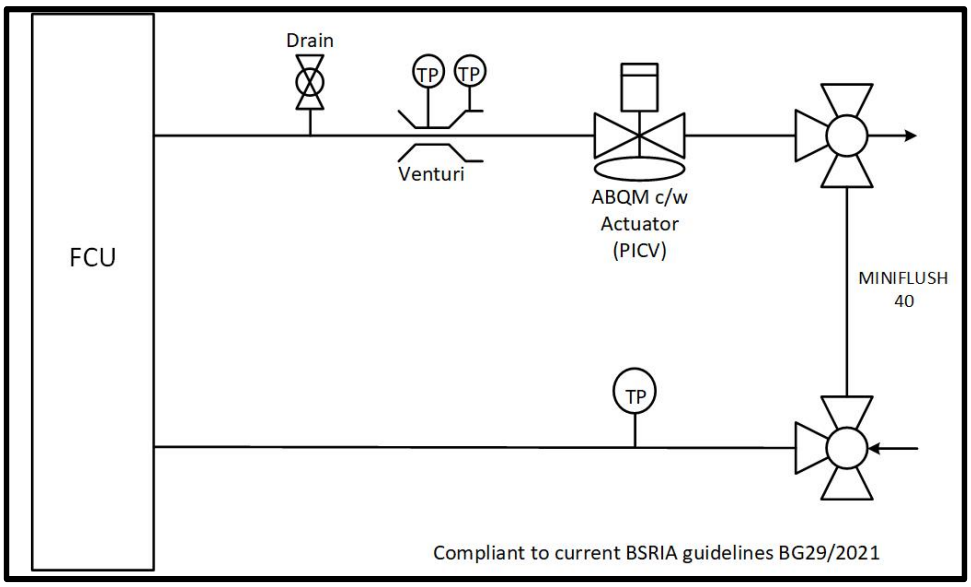


Schematic Symbol Guide

| | |
|---|---|
| AB-QM | -Pressure Independent Control Valve (actuator supplied separately) |
| DRAIN | -Drain point (additional DOC on the supply is optional) |
| MINIFLUSH 40 | -Isolation & Flushing valves |
| VENTURI | -Measuring station |
| TP | -Test Point |

## Ordering

| Type | Position of Terminal | Nominal Valve Flow Rate l/h | Recommended Q Max (l/h) | Recommended Q Min (l/h) | Orifice kVs | Connection Size | Connection Type Pipework | Connection Type Terminal | Actuator Type Modulating | Actuator Type 3-Point | Actuator Type Thermic |
|---|---|---|---|---|---|---|---|---|---|---|---|
| Miniflush 40 10LF 0.3 | Left Handed | 150 | 60 | 30 | 0.3 | 3/4" BSP | Internal Threaded | Solder | AME 110NL | AMV 110NL | TWA-Z |
| Miniflush 40 15LF 0.6 | Left Handed | 275 | 90 | 60 | 0.6 | 3/4" BSP | Internal Threaded | Solder | AME 110NL | AMV 110NL | TWA-Z |
| Miniflush 40 15LF 0.9 | Left Handed | 275 | 230 | 90 | 0.9 | 3/4" BSP | Internal Threaded | Solder | AME 110NL | AMV 110NL | TWA-Z |
| Miniflush 40 15 2.1 | Left Handed | 450 | 450 | 230 | 2.1 | 3/4" BSP | Internal Threaded | Solder | AME 110NL | AMV 110NL | TWA-Z |
| Miniflush 40 15HF 4.0 | Left Handed | 1135 | 600 | 450 | 4.0 | 3/4" BSP | Internal Threaded | Solder | AME 110NL | AMV 110NL | TWA-Z |
| Miniflush 40 15HF 5.6 | Left Handed | 1135 | 1135 | 600 | 5.6 | 3/4" BSP | Internal Threaded | Solder | AME 110NL | AMV 110NL | TWA-Z |
| Miniflush 40 10LF 0.3 | Right Handed | 150 | 60 | 30 | 0.3 | 3/4" BSP | Internal Threaded | Solder | AME 110NL | AMV 110NL | TWA-Z |
| Miniflush 40 15LF 0.6 | Right Handed | 275 | 90 | 60 | 0.6 | 3/4" BSP | Internal Threaded | Solder | AME 110NL | AMV 110NL | TWA-Z |
| Miniflush 40 15LF 0.9 | Right Handed | 275 | 230 | 90 | 0.9 | 3/4" BSP | Internal Threaded | Solder | AME 110NL | AMV 110NL | TWA-Z |
| Miniflush 40 15 2.1 | Right Handed | 450 | 450 | 230 | 2.1 | 3/4" BSP | Internal Threaded | Solder | AME 110NL | AMV 110NL | TWA-Z |
| Miniflush 40 15HF 4.0 | Right Handed | 1135 | 600 | 450 | 4.0 | 3/4" BSP | Internal Threaded | Solder | AME 110NL | AMV 110NL | TWA-Z |
| Miniflush 40 15HF 5.6 | Right Handed | 1135 | 1135 | 600 | 5.6 | 3/4" BSP | Internal Threaded | Solder | AME 110NL | AMV 110NL | TWA-Z |

Notes:
-The recommended flow rates are to enable accurate measurement of flow
-Actuators need to be ordered separately
-Options are available for connection to the pipework and terminal. Please discuss with your representative prior to ordering

## Operational Modes

Supply
This is the normal operation of the Mini-flush, with flow going through terminal, and out through the return, back to the system. The AB-QM valve will balance by limiting the flow to the coil, and the actuator will control flow as per the temperature requirement.

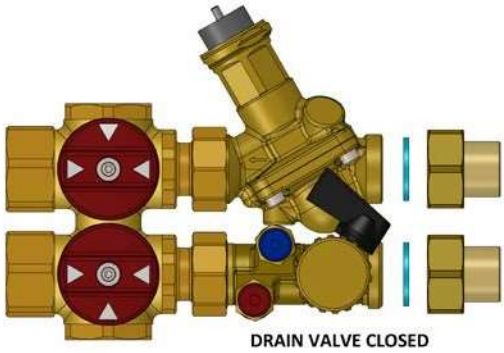


Flushing
During system flushing, the terminal will be isolated, but a flow around the main system is required. To enable bypassing we have positioned a flushing bypass within the Mini-flush assembly, which can open a link between flow and return, to enable mainline system flow for flushing.

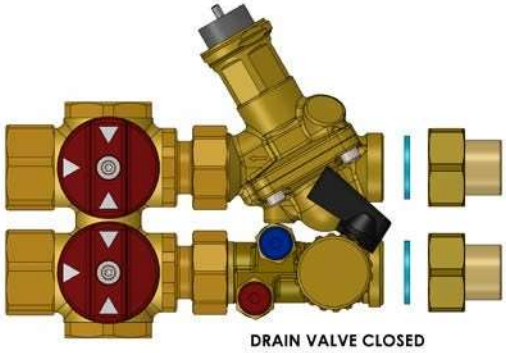


Back Flushing
To enable flushing through the terminal, the return can be opened, with the flow and bypass isolation valves closed. The drain is then opened, to allow flow through the coil, and any coil debris will be released through the flow side drain point.

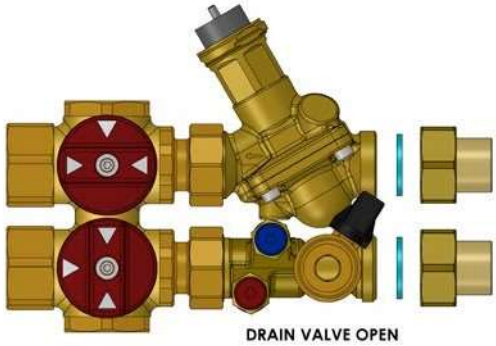


Isolation
For a variety of reasons, it may be required to completely isolate the terminal. For this we can isolate the flow and return, and close the bypass, to remove all flow through the coil and bypass.

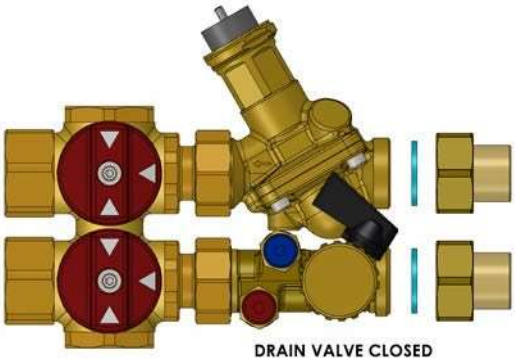

tacotherm

Working in partnership with Danfoss

Product Sheet | Pre-Fabricated Terminal Assembly | Type: Mini-Flush 40

# Pressure Independent Control Valve Specification

## Description

The precise flow control performance of the AB-QM with a Danfoss actuator provides increased comfort and superior Total Cost of Ownership because of savings made on:

- Efficient energy transfer and minimal pumping costs since there are no overflows at partial loads because of the exact pressure independent flow limitation.
- Smaller pump investments and lower energy consumption as the pump head needed are lower than in the traditional setup. With the built-in test plugs, it is easy to troubleshoot and find the optimal setpoint for the pump.
- Reduced movements of the actuator since the built-in differential pressure controller ensure the pressure fluctuations do not influence the room temperature.
- Achieving a stable temperature in a room leading to a lower average temperature at the same comfort level.
- Minimal flow complains as the valve performs as designed.
- Minimal blockage complains as the membrane design makes AB-QM less susceptible to blockage than a cartridge type constriction.
- Trouble-free segmentation of the building project. When sections of a project are finished, they can normally not be handed over to the customer with a fully functional HVAC installation. However, the AB-QM with a Danfoss actuator will automatically control the flow, even when other parts of the installation are still unfinished. It's not needed to adjust the AB-QM after finalisation of the project.
- Commissioning costs, the costs are close to zero because of a convenient setting procedure without the need for flow charts, calculations, or measuring equipment. The AB-QM valves can be set to a precise design value even when the system is up and running.
- Halved mounting costs as the AB-QM valve covers two functions, Balancing & Control

## Operation of the AB-QM Balancing and Control Valve

Differential pressure controller DPC

The differential pressure controller maintains a constant differential pressure across the control valve. The pressure difference ΔpCv (P2-P3) on the membrane is balanced with the force of the spring. Whenever the differential pressure across the control valve changes (due to a change in available pressure, or movement of the control valve) the hollow cone is displaced to a new position which brings a new equilibrium and therefore keeps the differential pressure at a constant level.

Control valve Cv

The control valve has a linear characteristic. It features a stroke limitation function that allows adjustment of the Kv value. The percentage marked on the scale equals the percentage of 100 % flow marked on the pointer. Changing the stroke limitation is done by lifting the locking mechanism and turning the top of the valve to the desired position, shown on the scale as a percentage. A blocking mechanism automatically prevents unwanted changing of the setting.

## PICV Technical Details

| Size | | 10LF | 15LF | 15 | 15HF |
|---|---|---|---|---|---|
| Flow Range l/s | Nom | 0.042 | 0.076 | 0.125 | 0.315 |
| | Min | 0.008 | 0.015 | 0.025 | 0.063 |
| Standard Setting Range | 20-100% | | | | |
| Starting Differential Pressure | kPa | 16 | 16 | 16 | 35 |
| Max Differential Pressure | Bar | 6 | 6 | 6 | 6 |
| Control Range | 1:1000 | | | | |
| Control Characteristic | Linear/Logarithmic with actuator | | | | |
| Leakage Rate | No visible leakage | | | | |
| Flow Medium | Water and water mixtures for closed heating and cooling systems according to plant type I for DIN EN14868 | | | | |
| Pressure Rating | PN | 10 as Standard (16 is available on request) | | | |
| Medium Temperature | ° C | -10...+120 | | | |
| Storage and Transport Temp | ° C | -40...70 | | | |
| Stroke | mm | 2.25 | | | |
| PICV Connection | Union Threaded/Solder | | | | |
| Body Material | DZR Brass | | | | |
| Membrane and O-Ring Material | EPDM | | | | |
| Control Valve Cone Material | CuZn40Pb3-CW614N | | | | |

## Selection Chart

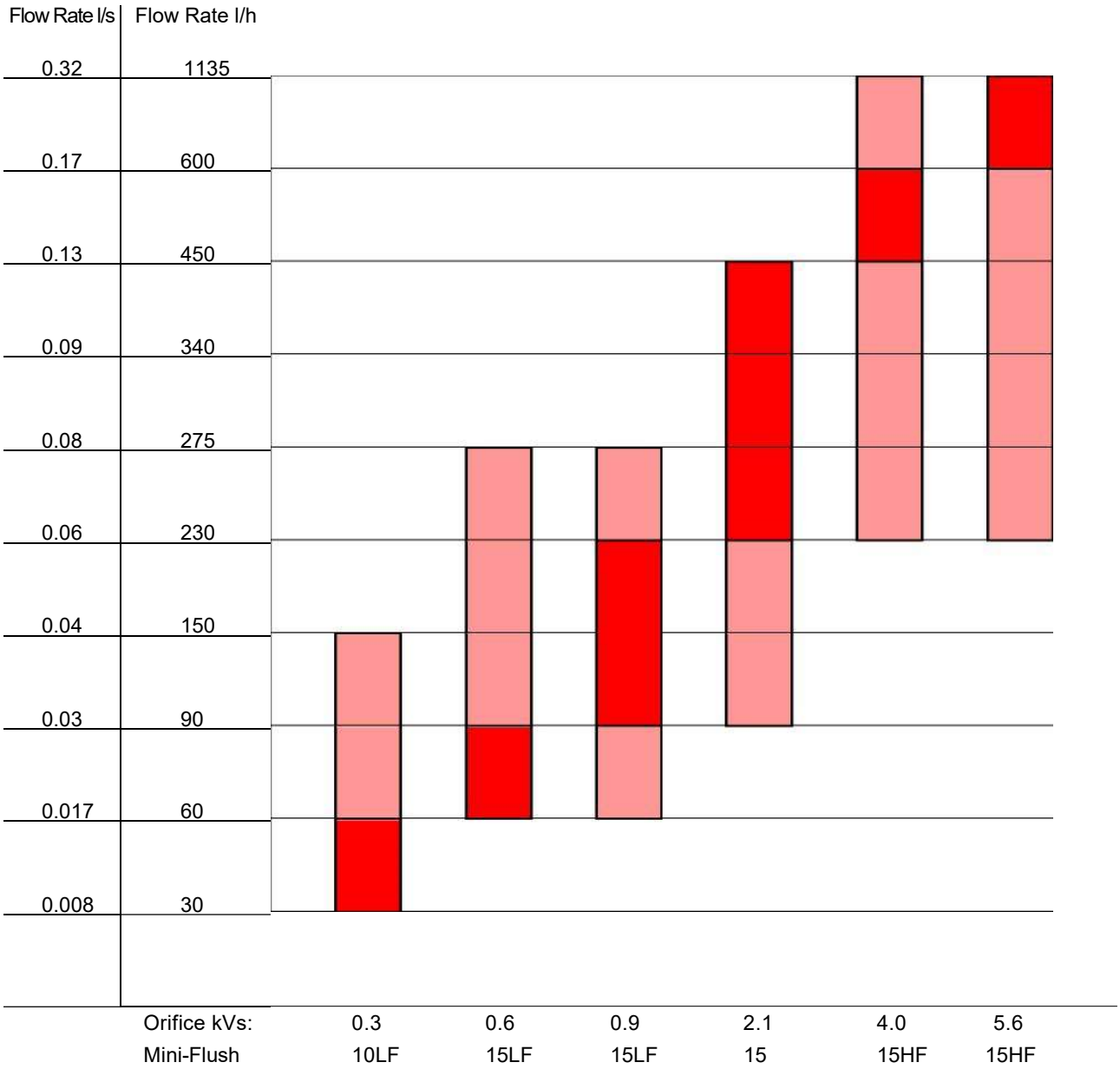


Notes:

This chart is for guidance only. Any selections must be checked with a Tacotherm representative before a final selection can be made.

To select a manifold size take your required design flow rate. Find the flow points it falls between on the flow axis, draw a line horizontally. Select the manifolds in red for optimum selection.

Where you have intersected a manifold in pink, you can select this manifold, but it may not be the optimum selection for accurate flow measurement, and you may experience high orifice pressure loss. PICV flow control performance will not be affected by selection within this range.

## Pressure Independent Control Valve Specification

Setting the AB-QM
The calculated flow can be adjusted easily without using special tools.

To change the presetting (factory setting is 100 %) follow the four steps below:

① Remove the blue protective cap or the mounted actuator
② Raise the grey pointer
③ Turn (clockwise to decrease) to the new presetting
④ Press grey pointer back into lock position. After click presetting is locked.

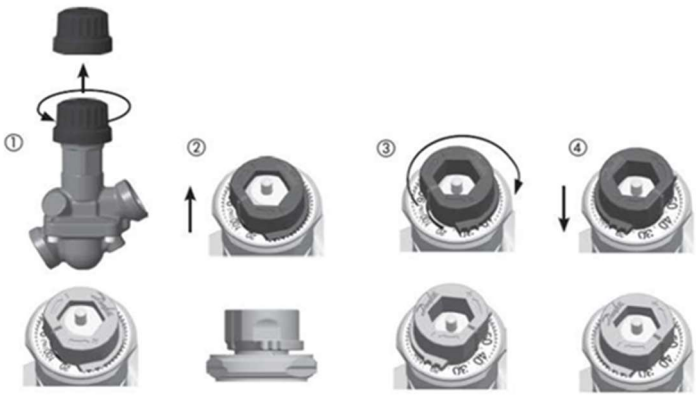


The presetting scale indicates values from 100 % flow to 0 %. Clockwise turning would decrease the flow value, while counter-clockwise would increase it.

If the valve is a DN 15 then the nom flow = 450 l/h =100 % presetting. To set a flow of 270 l/h, you have to set: 270/450 = 60 %.

Tacotherm recommends a presetting/flow from 20 % to 100 %. Factory presetting is 100 %.

## Verification of Flow Rate on Mini-Flush

To verify the flow rate, the following steps should be taken:

① Find the kVs of the measuring station on the orifice kVs chart
② Calculate the required pressure drop using the kVs and design flow rate, using the following formula:
$Q=Kv \times \sqrt{\Delta P}$
Note Q=m3/h, ΔP=Bar
③ Plug a manometer into the test points on the measuring station
④ If you are getting the required pressure, you have the desired flow rate

A guide to the expected pressure losses can be found in the chart below:

| Manifold Type | Nominal Flow Rate l/h | Orifice Kvs | Measuring Station Pressure Drop at PICV Setting (kPa) | | | | | | | | |
|---|---|---|---|---|---|---|---|---|---|---|---|
| | | | 100% | 90% | 80% | 70% | 60% | 50% | 40% | 30% | 20% |
| Miniflush 40 10LF 0.3 | 150 | 0.3 | 25.0 | 20.3 | 16.0 | 12.3 | 9.0 | 6.3 | 4.0 | 2.3 | 1.0 |
| Miniflush 40 15LF 0.6 | 275 | 0.6 | 21.0 | 17.0 | 13.4 | 10.2 | 7.5 | 5.2 | 3.4 | 1.9 | |
| Miniflush 40 15LF 0.9 | 275 | 0.9 | 9.3 | 7.5 | 5.9 | 4.5 | 3.4 | 2.3 | 1.5 | | |
| Miniflush 40 15 2.1 | 450 | 2.1 | 4.6 | 3.7 | 2.9 | 2.3 | 1.7 | 1.1 | | | |
| Miniflush 40 15HF 4.0 | 1135 | 4.0 | 8.0 | 6.5 | 5.2 | 3.9 | 2.9 | 2.0 | 1.3 | | |
| Miniflush 40 15HF 5.6 | 1135 | 5.6 | 4.1 | 3.3 | 2.6 | 2.0 | 1.5 | 1.0 | | | |

The highlighted cells indicate the best settings for flow rate measurement

## DN15 Mini-Flush Dimensions

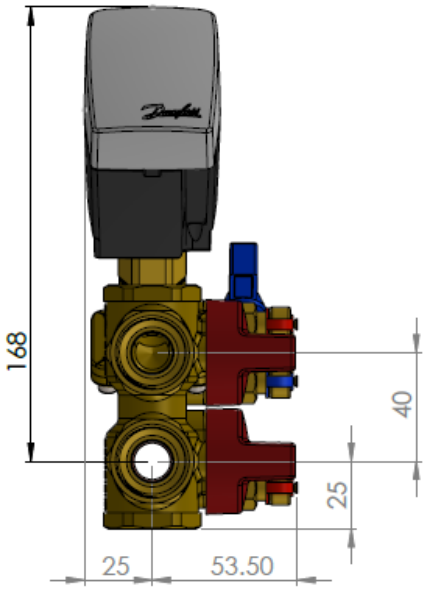


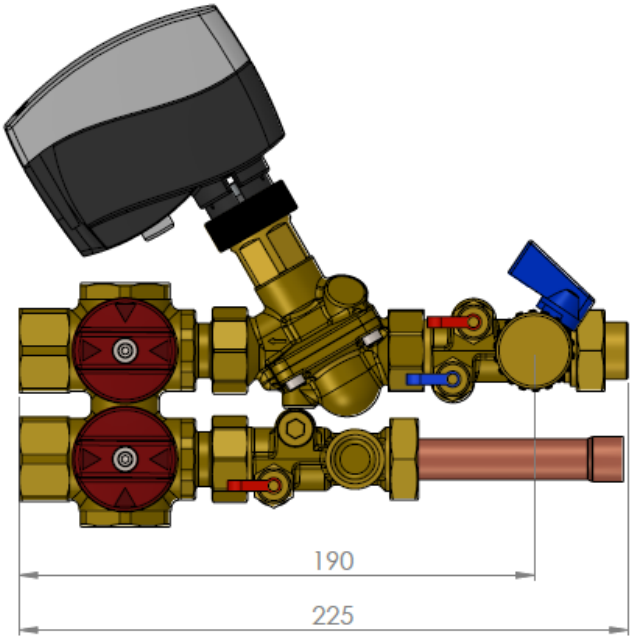


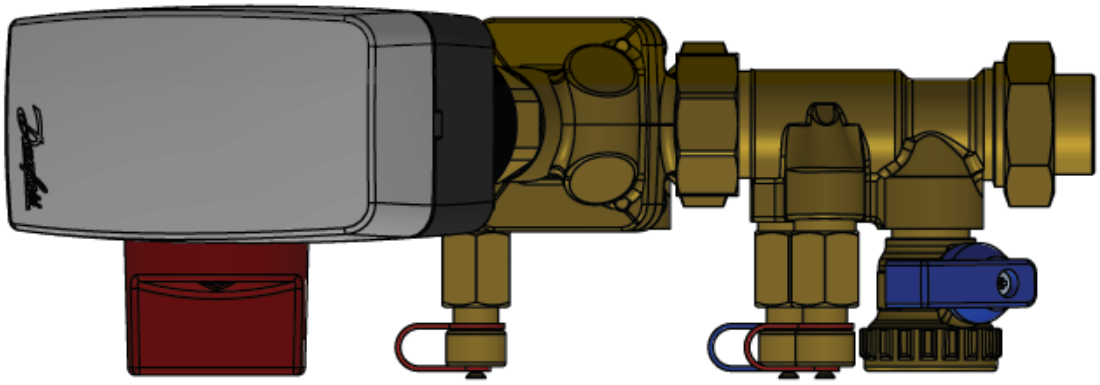

Tacotherm accept no liability for possible errors in this product sheet. Tacotherm reserve the right to alter this product without notice. This product us supplied by Tacotherm Limited

## Data sheet

# Actuators for modulating control AME 110 NL, AME 120 NL

### Description

The actuators are used together with automatically balanced combination valve type AB-QM for DN 10-32.

The actuator can be used with fan coil units, induction units, small reheaters, recoolers and zone applications in which hot/cold water is the controlled medium.

**Main data:**

- Gap detection at stem up position
- Modulating control
- Force switch-off at stem down position prevents overload of actuator and valve
- No tools required for mounting
- Maintenance-free lifetime
- Low-noise operation
- Self-positioning process
- Halogen free cables

### Ordering

| Type | Supply voltage (V) | Speed (s/mm) | Cable length (m) | Code No, Single Pack | Code No, Industry Pack |
|---|---|---|---|---|---|
| AME 110 NL | 24 AC | 24 | 1,5 | **082H8057** | **082H8067** |
| | | | 5,0 | **082H8081** | **082H8077** |
| | | | 10 | **082H8098** | **082H8087** |
| AME 120 NL | | 12 | 1,5 | **082H8059** | **/** |
| | | | 5,0 | **/** | **082H8079** |
| | | | 10 | **/** | **082H8089** |

***Note:***
*Actuators with 5 m and 10 m cable length are produced on request. Please note this increases lead time.*

### Spare parts

| Type | Length (m) | Code No. |
|---|---|---|
| Cable (24 V) | 5 | **082H8052** |
| | 10 | **082H8054** |

## Technical data

| Type | | | AME 110 NL | AME 120 NL |
|---|---|---|---|---|
| Power supply | | V | 24 AC; +20 to –15% * | |
| Power consumption | running | VA | 2 | |
| | standby | W | 0,5 | |
| Frequency | | Hz | 50/60 | |
| Control input Y | | V | 0-10 (2-10) Ri = 110 kΩ | |
| | | mA | 0-20 (4-20) Ri = 500 Ω | |
| Closing force | | N | 130 | |
| Stroke | | mm | 5 | |
| Speed | | s/mm | 24 | 12 |
| Relative humidity | | | max. 80 % | |
| Max. medium temperature | | °C | 120 | |
| Ambient temperature | | °C | 0 … 55 | |
| Storage and transport temperature | | °C | –40 … 70 | |
| Protection class | | | III safety extra-low voltage | |
| Grade of enclosure | | | IP 42 | |
| Weight | | kg | 0,3 | |
| CE - marking in accordance with standards | | | Low Voltage Directive 2006/95/EC: EN 60730-1, EN 60730-2-14<br>EMC Directive 2004/108/EEC: EN 61000-6-2, EN 61000-6-3 | |

** 24V AC; +10% to –15% if produced before w18y2013*

## Installation

**Mechanical**
The actuator should be mounted with the valve stem in either horizontal position or pointing upwards.

The actuator is fixed to the valve body by means of a mounting ring, which requires no tools for mounting. The ring should be tightened by hand.

**Electrical**
***Important:*** *It is strongly recommended that the mechanical installation is completed before the electrical installation.*

**Auto sleep mode**
1. If actuator AME 110 NL is charged by 24 V supply voltage and if it is not installed on AB-QM valve, it will stop in lower position and switch off all LED indicators after 5 minutes
2. **It is mandatory to drive the spindle of the actuator to upper position before it will be installed on AB-QM valve (please refer to manual override drawings)!**
3. Auto sleep mode switches back to learning mode by pressing RESET button or by cycling power supply

Each actuator is supplied with the connecting cable for the controller.

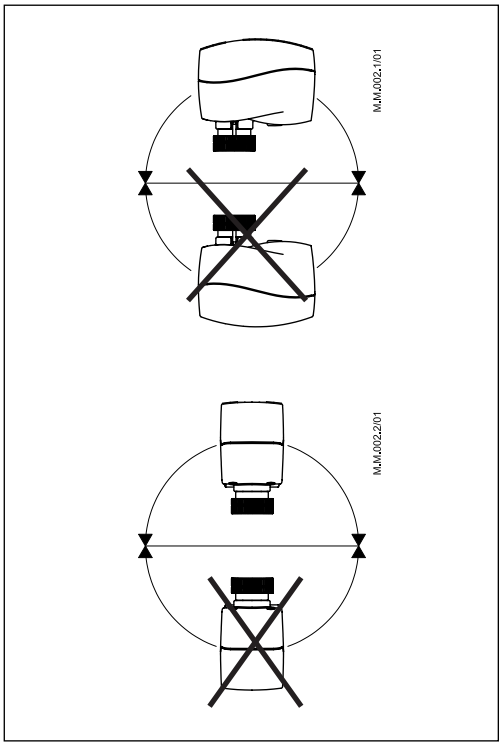

## Installation procedure

1. Check the valve neck. The actuator should be in stem up position (factory setting).

   Ensure that the actuator is mounted securely on the valve body

2. Wire the actuator according to the wiring diagram

3. The direction of the stem movement can be observed on the position indicator

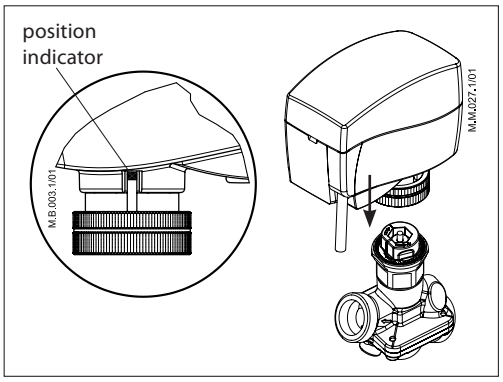


## Disposal

The actuator must be dismantled and the elements sorted into various material groups before disposal.

## Wiring

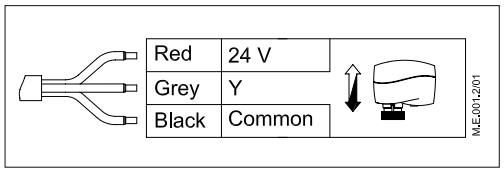


## Commissioning

The factory setting of the spindle is the fully stem up position because of easier mechanical connection of the actuator on the valve.

**DIP Switch Setting**
*(for service purposes only)*

The actuator has a function selection DIP switch under the removable cover.

The switch provides the following functions:

- SW1:
  **U/I - Input signal type selector**
  If set to OFF position, voltage input is selected. If set to ON position, current input is selected.

- SW 2:
  **0/2 - Input signal range selector**
  If set to OFF position, the input signal is in the range from 2-10 V (voltage input) or from 4-20 mA (current input). If set to ON position, the input signal is in the range from 0-10 V (voltage input) or from 0-20 mA (current input).

- SW 3:
  **D/I - Direct or inverse acting selector**
  If set to OFF position, the actuator is direct acting (stem contracts as voltage increases). If the actuator is set to ON position, the actuator is inverse acting (stem extracts as voltage increases).

- SW 4:
  **---/Seq - Normal or sequential mode selector**
  If set to OFF position, the actuator is working in the range 0(2)-10 V or 0(4)-20 mA. If set to ON position, the actuator is working in sequential range; 0(2)-5(6) V or (0(4-0(12) mA) or (5(6)-10 V) or (10(12)-20 mA).

- SW 5:
  **0-5/5-10 V - Input signal range in sequential mode**
  If set to OFF position, the actuator is working in the sequential range 0(2)-5(6) V or 0(4)-10(12) mA. If set to ON position, the actuator is working in the sequential range; 5(6)-10 V or 10(12)-20 mA.

- SW 6:
  **LIN/LOG - Linear or equal percentage flow through valve selector**
  If set to ON position, the flow through the valve is equal percentage-wise equals the control signal. If set to OFF position, the valve position is linear acc. to the control signal.

- SW 7:
  **---/ASTK - Anti-blocking function**
  Exercises the valve to avoid blocking in periods when the heating/cooling is off.
  If set to ON position (ASTK), the valve motion is switched on. The actuator opens and closes the valve every 7 days.
  If set to OFF position (---), the function is disabled.

- SW 8:
  **Reset switch and reset button on PCB**
  Changing this switch position will cause the actuator to go through a self stroking cycle.

  **Note:** Reset switch ① and reset button on PCB ② have the same function. The reset switch must be in OFF position to make reset button function active ( press it for 2 sec. ).

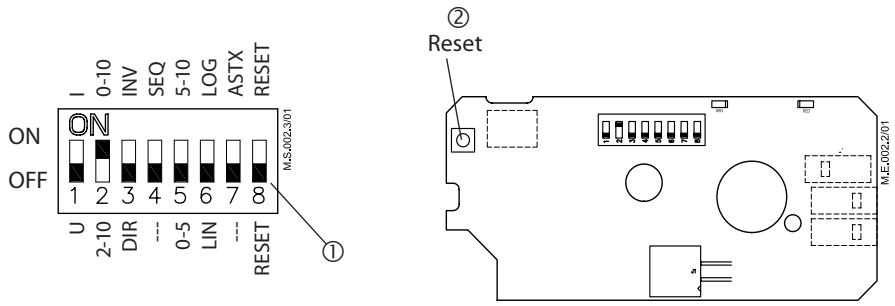


***Remark:***
*Factory setting: All switches (except switch 2 which is in ON position) are in OFF positions.*

**Manual override**
*(for service purposes only)*

***Caution:***
***Do not manually operate the drive if power is connected!***

***Do not dismount the actuator from the valve when it is in a stem down position!***
If dismounted in a stem down position, there is a high risk that the actuator gets stuck.

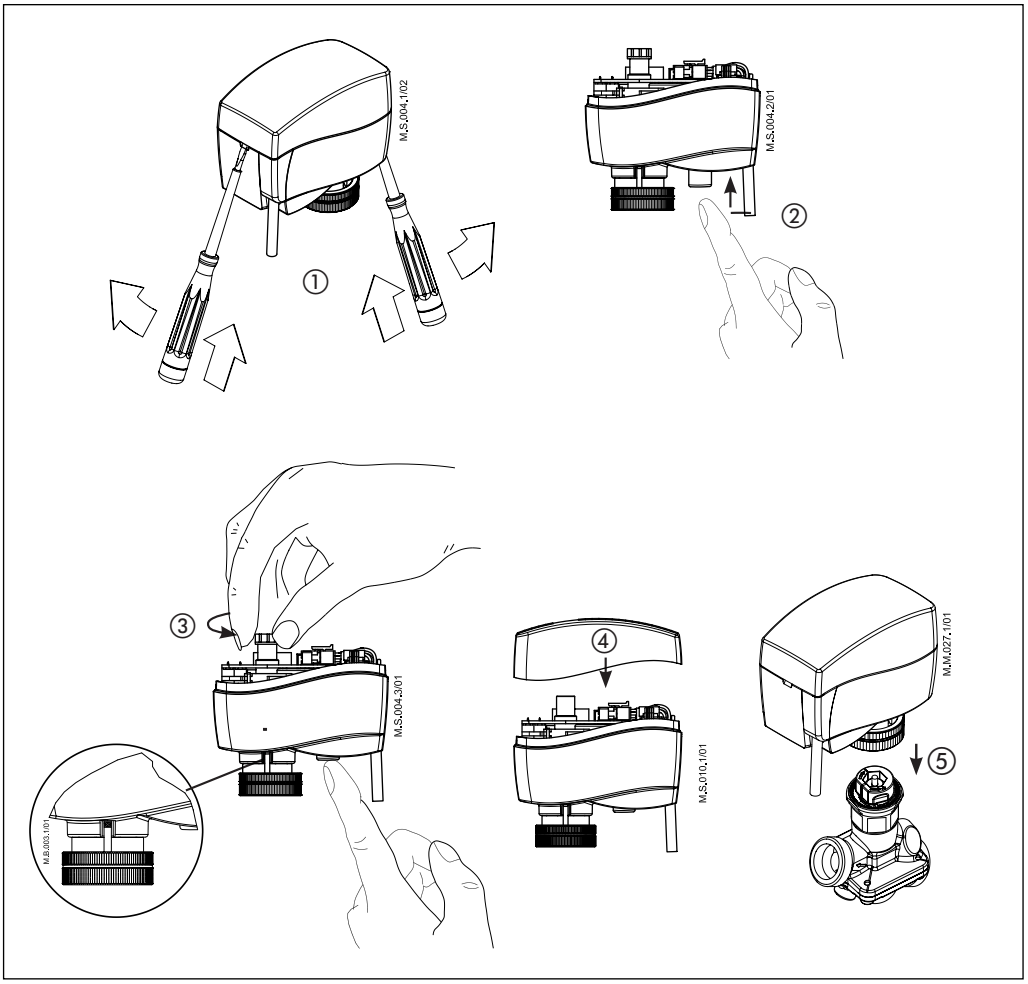


- Remove cover ①
- Press and hold the button ② (on the bottom side of the actuator) during manual override ③
- Replace cover ④
- Install actuator on valve ⑤

**Remark:**
A 'click' sound after energising the actuator indicates that the gear wheel has jumped into normal position.

**If manual override has been used, the Y signal will not be correct until the actuator has reached its end position. If this is not acceptable, reset the actuator.**

**Dimensions** *(mm)*

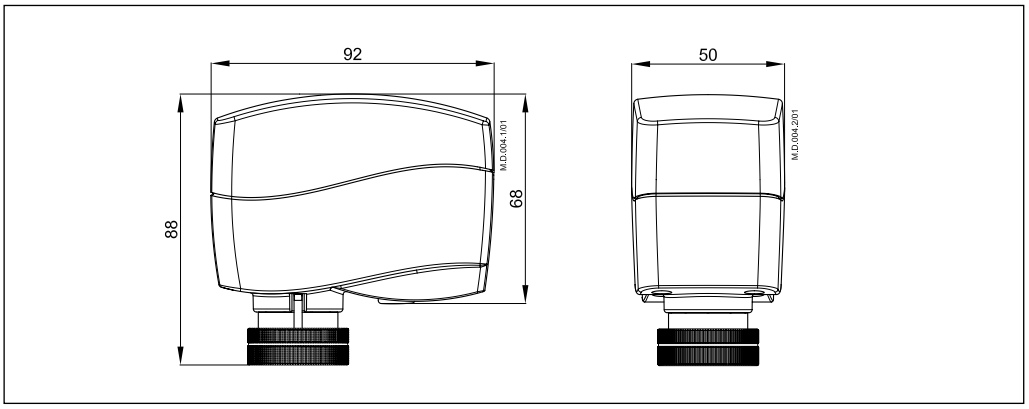

taconova

# TACOSETTER INLINE 100

## BALANCING VALVE

### ADVANTAGES

- Accurate and fast adjustment with scale and without the aid of diagrams, tables or measurement devices
- Direct reading of the set volume flow in l/min
- Variable installation position, maintenance-free
- Regulating valve with isolating facility (rest leakage possible)
- Additional types are also available as make resistant to dezincification

Direct regulation, reading and shut-off of flows in systems

### DESCRIPTION

Direct hydraulic balancing and control of flows to consumers or in a sub-system.
Balancing valves offer a quick, easy and accurate method of adjusting the flow rates through heating, ventilation, air conditioning and cooling systems.
Correct balancing of hydraulic circuits ensures optimum energy distribution, resulting in more efficient and economical operation in accordance with the energy saving regulations provided for by legislation.
With TacoSetter Inline 100 balancing valves, any qualified fitter can set the appropriate flow rate using the unique flow measurement device, avoiding investments in training and costly measuring devices.

### INSTALLATION POSITION

The valve can be installed in a horizontal, vertical or inclined position. Care should be taken that the arrow is pointing in the direction of the flow.

### OPERATION

The flow measurement is based on the principle of a baffle float with return spring. The flowmeter is built into the housing.
The balancing can be carried out with a screwdriver at the adjusting screw. The reading position is the bottom line of the baffle float.

### BUILDING CATEGORIES

For pipe installations in drinking water, heating and cooling area:

- Apartment blocks, housing estates, multiple dwelling units
- Residential care facilities and hospitals
- Administration and service buildings
- Hotels and restaurants, industrial kitchens
- School buildings and sports facilities
- Commercial and industrial buildings
- Facilities with partial use, such as barracks, camping sites

### SYSTEM/BASIC DIAGRAM

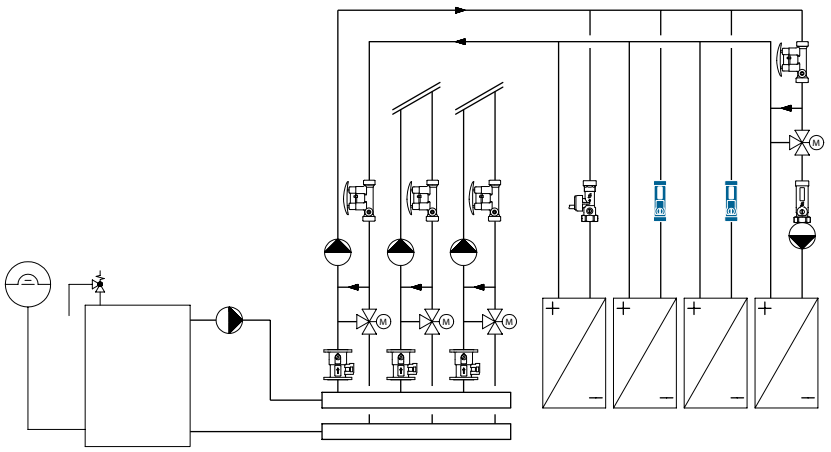

## SPECIFICATION TEXT

See www.taconova.com

## TECHNICAL DATA

**General**

- Operating temperature $T_{0\,max}$: 100 °C
- Operating pressure $P_{0\,max}$: 10 bar
- Measuring accuracy: ±10 % of the indicated value
- $k_{VS}$ value and measurement range see «Type overview»
- Connections:
  - ¾" euro cone
  - ½" female thread acc. to DIN 2999
  - 1" thread G (flat-sealing) acc. to ISO 228

**Material**

- Housing: see «Type overview»
- Sight glass: heat- and impact resistant plastic
- Seals: EPDM

**Fluids**

- Heating water (VDI 2035; SWKI BT 102-01; ÖNORM H 5195-1)
- Potable water (DIN 1988-200)
- Water and proprietary additives used against corrosion and freezing up to 50% (see document «Correction curves»)

## APPROVALS / CERTIFICATES

- KTW, W270, ACS

## TYPE OVERVIEW

TacoSetter Inline 100 | Balancing valve made of brass with female thread

| Order no. | DN | G × Rp | Measuring range | $k_{VS}$ (m³/h) |
|---|---|---|---|---|
| 223.1202.000 | 15 | ¾" × ½" | 0,3 – 1,5 (l/min) | 0,25 |
| 223.1203.000 | 15 | ¾" × ½" | 0,6 – 2,4 (l/min) | 0,6 |
| 223.1204.000 | 15 | ¾" × ½" | 1,0 – 3,5 (l/min) | 1,35 |
| 223.1208.000 | 15 | ¾" × ½" | 2,0 – 8,0 (l/min) | 1,8 |
| 223.1209.000 | 15 | ¾" × ½" | 3,0 – 12,0 (l/min) | 1,85 |

TacoSetter Inline 100 | Balancing valve made of brass with male thread

| Order no. | DN | G × G | Measuring range | $k_{VS}$ (m³/h) |
|---|---|---|---|---|
| 223.1233.000 | 15 | ¾" × ¾" | 0,6 – 2,4 (l/min) | 0,6 |
| 223.1234.000 | 15 | ¾" × ¾" | 1,0 – 3,5 (l/min) | 1,35 |
| 223.1238.000 | 15 | ¾" × ¾" | 2,0 – 8,0 (l/min) | 1,8 |
| 223.1239.000 | 15 | ¾" × ¾" | 3,0 – 12,0 (l/min) | 1,85 |
| 223.1300.000 | 20 | 1" × 1" | 4,0 – 15,0 (l/min) | 5,0 |
| 223.1302.000 | 20 | 1" × 1" | 8,0 – 30,0 (l/min) | 5,0 |
| 223.1305.000 | 20 | 1" × 1" | 10,0 – 40,0 (l/min) | 5,0 |

TacoSetter Inline 100 | Balancing valve made of dezincification-resistant (DZR) brass with female thread

| Order no. | DN | G × Rp | Measuring range | $k_{VS}$ (m³/h) |
|---|---|---|---|---|
| 223.1204.104 | 15 | ¾" × ½" | 1,0 – 3,5 (l/min) | 1,35 |
| 223.1208.104 | 15 | ¾" × ½" | 2,0 – 8,0 (l/min) | 1,8 |
| 223.1209.104 | 15 | ¾" × ½" | 3,0 – 12,0 (l/min) | 1,85 |

TacoSetter Inline 100 | Balancing valve made of dezincification-resistant (DZR) brass with male thread

| Order no. | DN | G × G | Measuring range | $k_{VS}$ (m³/h) |
|---|---|---|---|---|
| 223.1232.104 | 15 | ¾" × ¾" | 0,3 – 1,5 (l/min) | 0,25 |
| 223.1233.104 | 15 | ¾" × ¾" | 0,6 – 2,4 (l/min) | 0,6 |
| 223.1234.104 | 15 | ¾" × ¾" | 1,0 – 3,5 (l/min) | 1,35 |
| 223.1238.104 | 15 | ¾" × ¾" | 2,0 – 8,0 (l/min) | 1,8 |

## DIMENSIONAL DRAWING

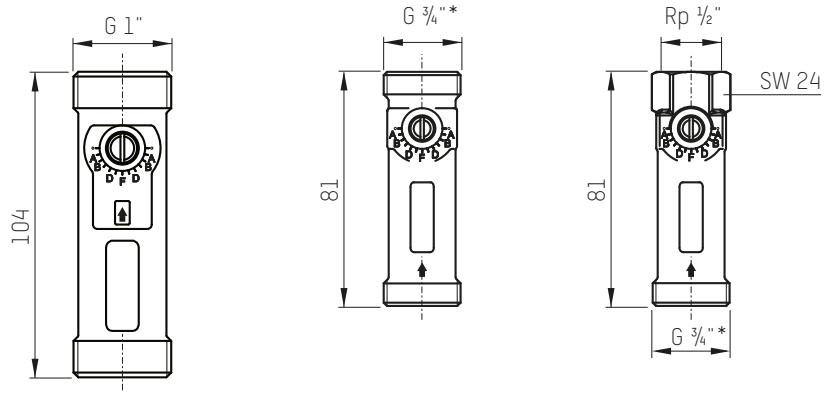


* Euro cone

## GLYCOL CORRECTION CURVES

There is a separate diagram for TacoSetter up to DN25 and its flow ranges with nine correction curves for use of anti-frost and anti-corrosion agents.
Corrections are not required for larger dimensions as the deviation lies within the measuring tolerance.
See www.taconova.com

## PRESSURE LOSS DIAGRAMS

**223.1202.000** (DN 15 | 0,3...1,5 l/min)
**223.1232.104** (DN 15 | 0,3...1,5 l/min)

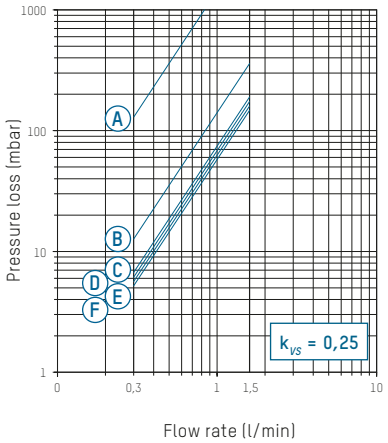


**A – F** Valve position

**223.1203.000** (DN 15 | 0,6...2,4 l/min)
**223.1233.XXX** (DN 15 | 0,6...2,4 l/min)

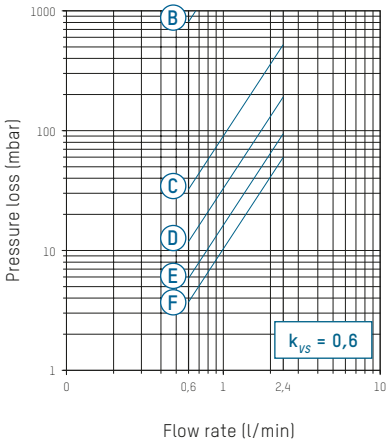


**B – F** Valve position

**223.1204.XXX** (DN 15 | 1,0...3,5 l/min)
**223.1234.XXX** (DN 15 | 1,0...3,5 l/min)

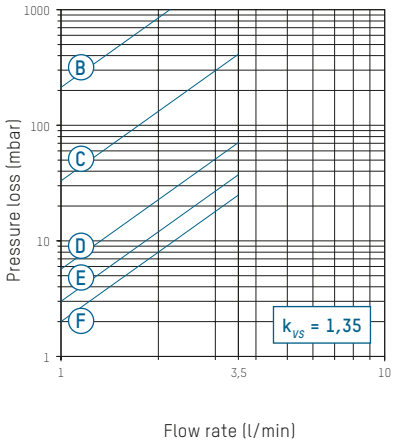


**B – D** Valve position

**223.1208.XXX** (DN 15 | 2...8 l/min)
**223.1238.XXX** (DN 15 | 2...8 l/min)

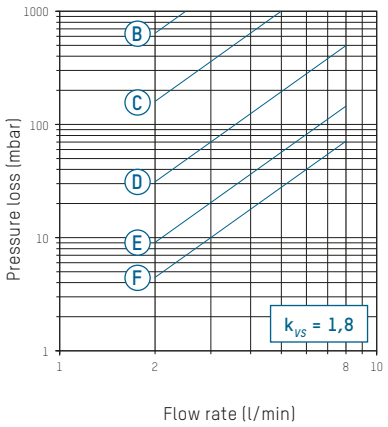


**B –F** Valve position

**223.1209.XXX** (DN 15 | 3...12 l/min)
**223.1239.000** (DN 15 | 3...12 l/min)

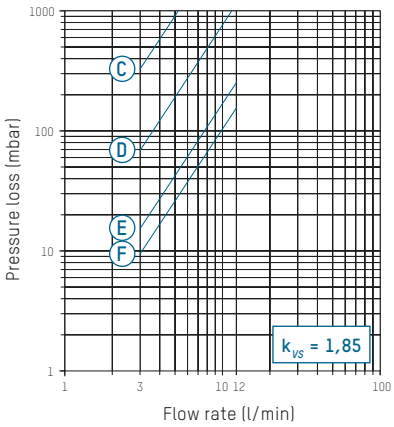


**C – F** Valve position

**223.1300.000** (DN 20 | 4...15 l/min)

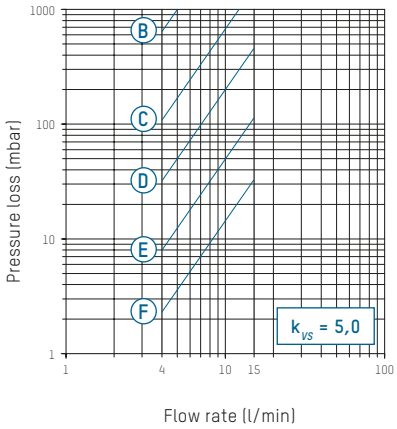


**C – F** Valve position

**223.1302.000** (DN 20 | 8...30 l/min)
**223.1305.000** (DN 20 | 10...40 l/min)

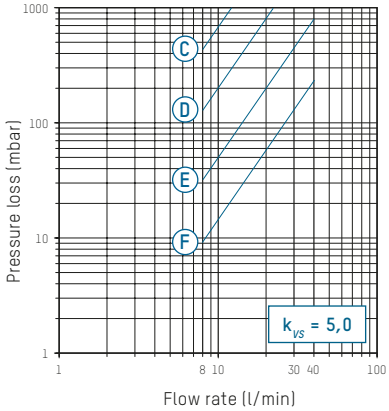


**C – F** Valve position

## ACCESSORIES

### SYSTEM SCREW CONNECTION FITS TO TACOSETTER INLINE

Comprising a cap nut, clamp ring and support sleeve

| Order no. | G × mm | Version for | Fits to |
|---|---|---|---|
| 210.3325.000 | ¾" × 15 | Copper pipe 15/1 Eurocone | DN 15 |

Screw connections with cap nut and insert

| Order no. | G × R | Version for | Fits to |
|---|---|---|---|
| 210.6221.000 | ¾" × ½" | ½" thread, conically sealing, dezincification-resistant | DN 15 |
| 210.6632.000 | 1" × ¾" | ¾" thread, flat-sealing | DN 20 |
| 210.6633.000 | 1¼" × 1" | 1" thread, flat-sealing | DN 20 |
| 210.6222.000 | ¾" × ½" | ½" thread, self-sealing | DN 15 |

Subject to modification. 11/2021

CONTACT AND FURTHER INFORMATION TACONOVA.COM

Taconova Group AG | Neunbrunnenstrasse 40 | CH-8050 Zurich | T +41 44 735 55 55 | F +41 44 735 55 02 | group@taconova.com

taconova

# TACOSETTER BYPASS 100

## BALANCING VALVE

### ADVANTAGES

- Accurate and fast adjustment with scale and without the aid of diagrams, tables or measurement devices
- Direct reading of the set volume flow in l/min
- Variable installation position, maintenance-free
- Flow control with setpoint adjuster
- Regulating valve with isolating facility (rest leakage possible)
- Minimal pressure loss

Direct regulation, indication and isolation of flows in systems.

### DESCRIPTION

Direct hydraulic balancing and control of flows to consumers or in a subsystem. Balancing valves offer an easy and accurate method of adjusting the flow rates for heating-, ventilation-, air conditioning- and cooling systems.
Correct balancing of hydraulic circuits ensures optimum energy distribution, resulting in more efficient and economical operation in accordance with the energy saving regulations provided for by legislation.

With TacoSetter Bypass balancing valves, any qualified fitter can set the appropriate flow rate using the unique flow measurement device, avoiding investments in training and costly measuring devices.

### INSTALLATION POSITION

The TacoSetter Bypass 100 requires a straight section of pipe of the same length and diameter as the system. The valve can be installed in a horizontal, vertical or inclined position. Care should be taken that the arrow is pointing in the direction of the flow.

### OPERATION

The flow measurement is based on the principle of a baffle float with return spring. The reading position is the bottom line of the baffle float. The measuring device is placed in a bypass to the main flow, isolated from system flow. By demand the bypass, with self locking valves, gets opened / closed by pressing / releasing the clamp. Reading the flow rate has no influence on the main flow rate.

### BUILDING CATEGORIES

For pipe installations in drinking water, heating and cooling area:

- Apartment blocks, housing estates, multiple dwelling units
- Residential care facilities, hospitals
- Administration and service buildings
- Hotels and restaurants, industrial kitchens
- School buildings and sports facilities
- Commercial and industrial buildings
- Facilities with partial use, such as barracks, camping sites

### SYSTEM/BASIC DIAGRAM

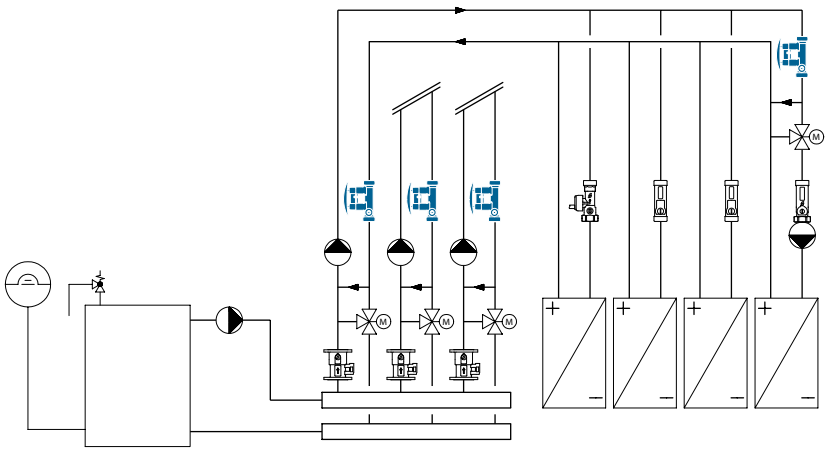

## SPECIFICATION TEXT

See www.taconova.com

## TECHNICAL DATA

**General**

- Operating temperature $T_{0\,max}$: 100 °C
- Operating pressure $P_{0\,max}$: 10 bar
- Measuring accuracy:
  - Measurement range 20 – 80%: ±5% of the indicated value
  - Measurement range <20% / >80%: = ±10% of the indicated value
- $k_{VS}$ value and measurement range see «Type overview»
- Female thread (cylindrical) to DIN 2999 / ISO 7 or male thread G (cylindrical) to ISO 228

**Material**

- Housing: brass
- Inside: stainless steel, brass, plastic
- Sight glass: heat- and impact resistant plastic
- Seals: EPDM

**Fluids**

- Heating water (VDI 2035; SWKI BT 102-01; ÖNORM H 5195–1)
- Potable water (DIN 1988-200)
- Water and proprietary additives used against corrosion and freezing up to 50% (see document «Correction curves»)

## APPROVALS / CERTIFICATES

- ACS

## ADDITIONAL MODELS

Setter for solar applications, see data sheets TacoSetter Bypass Solar 130 and TacoSetter Bypass Solar 185. Complete sets with insulation box are available for the TacoSetter Bypass 100 (see our „Range of Products" catalog and our „Price List").

## GLYCOL CORRECTION CURVES

There is a separate diagram for TacoSetter up to DN25 and its flow ranges with nine correction curves for use of anti-frost and anti-corrosion agents.
Corrections are not required for larger dimensions as the deviation lies within the measuring tolerance.
See www.taconova.com

## TYPE OVERVIEW

TacoSetter Bypass 100 | Balancing valve with female thread

| Order no. | DN | Rp × Rp | Measuring range | $k_{VS}$ (m³/h) |
|---|---|---|---|---|
| 223.2262.000 | 15 | ½" × ½" | 2 – 8 (l/min) | 1,95 |
| 223.2361.000 | 20 | ¾" × ¾" | 2 – 8 (l/min) | 1,95 |
| 223.2360.000 | 20 | ¾" × ¾" | 4 – 15 (l/min) | 3,3 |
| 223.2362.000 | 20 | ¾" × ¾" | 8 – 30 (l/min) | 5,0 |
| 223.2460.000 | 25 | 1" × 1" | 6 – 20 (l/min) | 5,1 |
| 223.2461.000 | 25 | 1" × 1" | 10 – 40 (l/min) | 8,1 |
| 223.2561.000 | 32 | 1 ¼" × 1 ¼" | 20 – 70 (l/min) | 17,0 |
| 223.2661.000 | 40 | 1 ½" × 1 ½" | 30 – 120 (l/min) | 30,0 |
| 223.2861.000 | 50 | 2" × 2" | 50 – 200 (l/min) | 54,0 |

TacoSetter Bypass 100 | Balancing valve with male thread

| Order no. | DN | G × G | Measuring range | $k_{VS}$ (m³/h) |
|---|---|---|---|---|
| 223.2272.000 | 20 | 1" × 1" | 2 – 8 (l/min) | 2,2 |
| 223.2370.000 | 20 | 1" × 1" | 4 – 15 (l/min) | 3,3 |
| 223.2372.000 | 20 | 1" × 1" | 8 – 30 (l/min) | 5,0 |
| 223.2470.000 | 25 | 1 ¼" × 1 ¼" | 6 – 20 (l/min) | 5,1 |
| 223.2471.000 | 25 | 1 ¼" × 1 ¼" | 10 – 40 (l/min) | 8,1 |
| 223.2571.000 | 32 | 1 ½" × 1 ½" | 20 – 70 (l/min) | 17,0 |

## DIMENSIONAL DRAWING

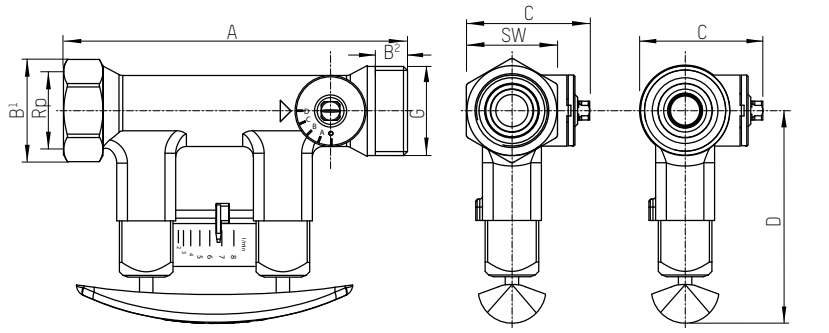


## MEASUREMENT TABLE

TacoSetter Bypass 100 | Balancing valve with female thread

| Order no. | DN | A | B¹ | C | D | SW | Rp |
|---|---|---|---|---|---|---|---|
| 223.2262.000 | 15 | 142 | 39 | 46 | 79 | 34 | ½" |
| 223.2361.000 | 20 | 129 | 39 | 46 | 79 | 34 | ¾" |
| 223.2360.000 | 20 | 129 | 39 | 46 | 79 | 34 | ¾" |
| 223.2362.000 | 20 | 129 | 39 | 46 | 79 | 34 | ¾" |
| 223.2460.000 | 25 | 152 | 47 | 58 | 82 | 41 | 1" |
| 223.2461.000 | 25 | 152 | 47 | 58 | 82 | 41 | 1" |
| 223.2561.000 | 32 | 161 | 56 | 65 | 84 | 49 | 1 ¼" |
| 223.2661.000 | 40 | 173 | 64 | 79 | 90 | 59 | 1 ½" |
| 223.2861.000 | 50 | 197 | 76 | 91 | 97 | 70 | 2" |

TacoSetter Bypass 100 | Balancing valve with male thread

| Order no. | DN | A | B² | C | D | G |
|---|---|---|---|---|---|---|
| 223.2272.000 | 20 | 129 | 12 | 46 | 79 | 1" |
| 223.2370.000 | 20 | 129 | 12 | 46 | 79 | 1" |
| 223.2372.000 | 20 | 129 | 12 | 46 | 79 | 1" |
| 223.2470.000 | 25 | 152 | 15 | 58 | 82 | 1 ¼" |
| 223.2471.000 | 25 | 152 | 15 | 58 | 82 | 1 ¼" |
| 223.2571.000 | 32 | 161 | 15 | 65 | 84 | 1 ½" |

## PRESSURE LOSS DIAGRAMS

**223.2262.000** (DN 15 | ½" | 2...8 l/min)
**223.2361.000** (DN 20 | ¾" | 2...8 l/min)
**223.2272.000** (DN 20 | 1" | 2...8 l/min)

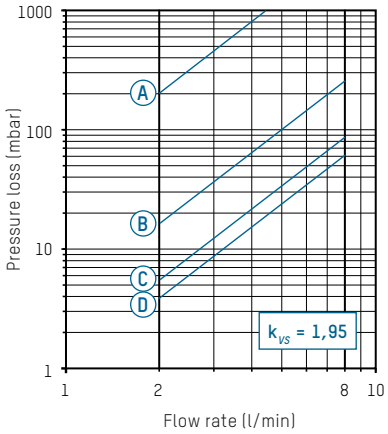


**A – D** Valve position

**223.2360.000** (DN 20 | ¾" | 4...15 l/min)
**223.2370.000** (DN 20 | 1" | 4...15 l/min)

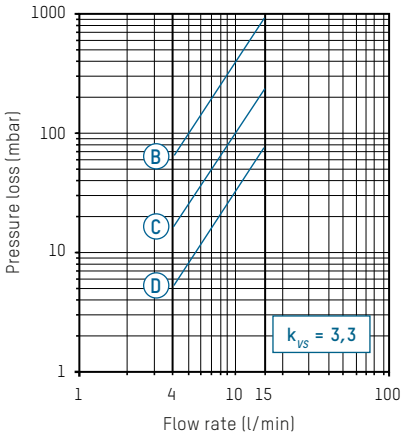


**B – D** Valve position

**223.2362.000** (DN 20 | ¾" | 8...30 l/min)
**223.2372.000** (DN 20 | 1" | 8...30 l/min)

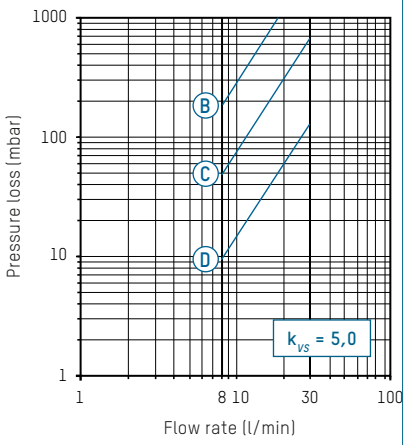


**B – D** Valve position

**223.2460.000** (DN 25 | 1" | 6...20 l/min)
**223.2470.000** (DN 25 | 1¼" | 6...20 l/min)

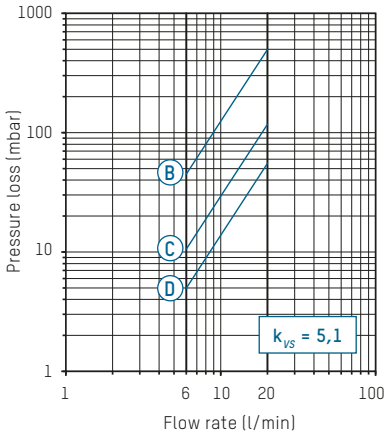


**B – D** Valve position

**223.2461.000** (DN 25 | 1" | 10...40 l/min)
**223.2471.000** (DN 25 | 1¼" | 10...40 l/min)

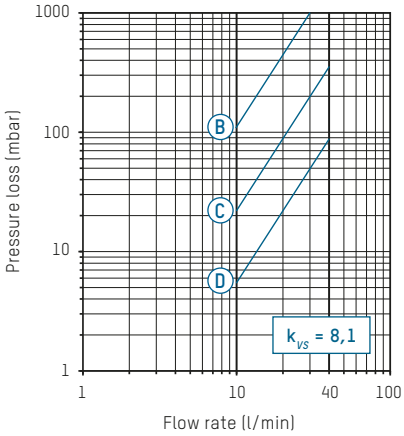


**B – D** Valve position

**223.2561.000** (DN 32 | 1¼" | 20...70 l/min)
**223.2571.000** (DN 32 | 1½" | 20...70 l/min)

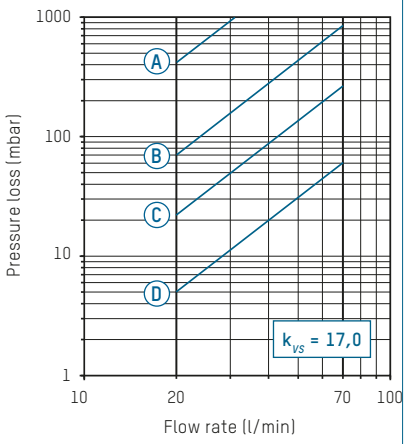


**A – D** Valve position

**223.2661.000** (DN 40 | 1½" | 30...120 l/min)

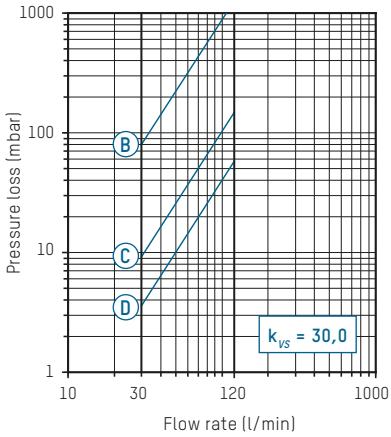


**B – D** Valve position

**223.2861.000** (DN 50 | 2" | 50...200 l/min)

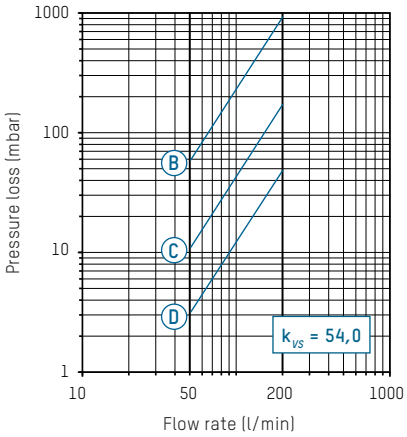


**B – D** Valve position

## ACCESSORIES

### INSULATION BOX

EPP, $T_0$ -30 – 130 °C, in accordance with EnEV guideline

| Order no. | Fits to |
|---|---|
| 296.2321.004 | DN 15 + DN 20 |
| 296.2322.004 | DN 25 |
| 296.2323.004 | DN 32 |
| 296.2324.004 | DN 40 |
| 296.2325.004 | DN 50 |

### SYSTEM SCREW CONNECTION FITS TO TACOSETTER BYPASS

Screw connection with male thread R (conical) as per DIN 2999

| Order no. | G × R | Version for | Fits to |
|---|---|---|---|
| 210.6630.000 | ¾" × ½" | Threaded pipe Rp ¾" | DN 15 |
| 210.6631.000 | 1" × ½" | Threaded pipe Rp ¾" | DN 15 |
| 210.6632.000 | 1" × ¾" | Threaded pipe Rp ¾" | DN 20 |
| 210.6633.000 | 1¼" × 1" | Threaded pipe Rp 1" | DN 25 |

Screw connection with solder connection

| Order no. | G x mm | Version for | Fits to |
|---|---|---|---|
| 210.5331.019 | 1" x 18 | Copper pipe ø 18 mm | DN 15 (Male) |
| 210.5332.019 | 1" x 22 | Copper pipe ø 22 mm | DN 20 (Male) |
| 210.5334.003 | 1¼" x 28 | Copper pipe ø 28 mm | DN 25 (Male) |

## SPARE PARTS

### SIGHT GLASS (COMPLETE) AND SEAL

| Order no. | Range | Fits to |
|---|---|---|
| 298.2333.020 | 2 – 8 (l/min) | 223.2262.000 / 223.2272.000 |
| 298.2334.020 | 4 – 15 (l/min) | 223.2360.000 / 223.2370.000 |
| 298.2335.020 | 8 – 30 (l/min) | 223.2362.000 / 223.2372.000 |
| 298.2342.020 | 6 – 20 (l/min) | 223.2460.000 / 223.2470.000 |
| 298.2343.020 | 10 – 40 (l/min) | 223.2461.000 / 223.2471.000 |
| 298.2352.020 | 20 – 70 (l/min) | 223.2561.000 / 223.2571.000 |
| 298.2362.020 | 30 – 120 (l/min) | 223.2661.000 |
| 298.2382.020 | 50 – 200 (l/min) | 223.2861.000 |

Subject to modification. 11/2020



Taconova Group AG | Neunbrunnenstrasse 40 | CH-8050 Zurich | T +41 44 735 55 55 | F +41 44 735 55 02 | group@taconova.com

taconova

# TACOSETTER BYPASS FLANGE

## BALANCING VALVE

### ADVANTAGES

- Accurate and fast adjustment with scale and without the aid of diagrams, tables or measurement devices
- Direct reading of the set volume flow in l/min
- Variable installation position, maintenance-free
- Flow control with setpoint adjuster
- Regulating valve with isolating facility (rest leakage possible)
- Minimal pressure loss

Direct reading and balancing valve with visual flow indication.

### DESCRIPTION

Direct hydraulic balancing and control of flows to consumers or in a subsystem. TacoSetter Bypass Flange balancing valves offer an easy and accurate method of adjusting the flow rates for heating-, ventilation-, air conditioning- and cooling systems.
Correct balancing of hydraulic circuits ensures optimum energy distribution, resulting in more efficient and economical operation in accordance with the energy saving regulations provided for by legislation.
With TacoSetter Bypass Flange balancing valves, any qualified fitter can set the appropriate flow rate using the unique flow measurement device, avoiding investments in training and costly measuring devices.

### INSTALLATION

To avoid turbulence and obtain maximum accuracy of the required flow it is necessary to install, on the inlet side of the valve, a section of straight pipe, the same diameter and length as the valve body.
The valve may be installed in any position, care should be taken in order to ensure that both the measuring cylinder and adjustment screw are not obstructed and that the arrow is pointing in the direction of the flow.

### OPERATION

Measurement of the flow rate through the valve can be set by turning the adjustment screw until the required flow rate is read on the front edge of the float, which is situated within the measuring cylinder.
The two check valves must be in the open position but can be closed after commissioning without affecting the set position.

### BUILDING CATEGORIES

For pipe installations in heating water and cooling areas:

- Apartment blocks, housing estates, multiple dwelling units
- Residential care facilities and hospitals
- Administration and service buildings
- School buildings and sports facilities
- Commercial and industrial buildings

### SYSTEM / BASIC DIAGRAM

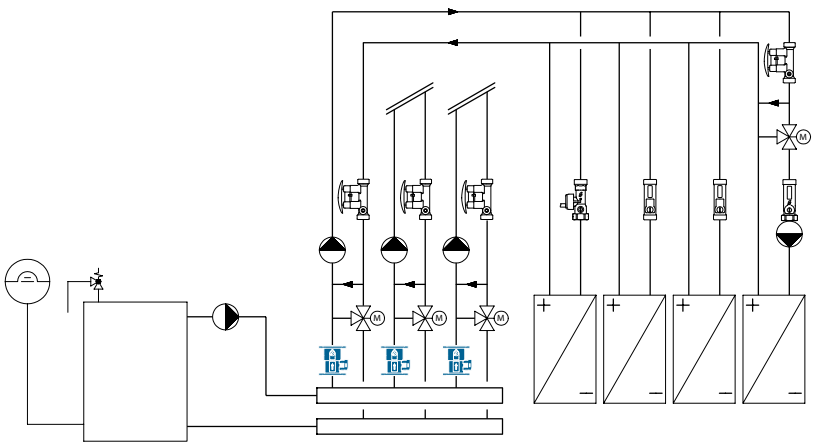

# TACOSETTER BYPASS FLANGE | BALANCING VALVE

## SPECIFICATION TEXT

See www.taconova.com

## TECHNICAL DATA

**Generally**

- Operating temperature $T_{0\ max}$: 100 °C
- Operating pressure $P_{0\ max}$: 10 bar
- Measuring accuracy: ±5% of nominal flow
- $k_{VS}$-value and measurement range see «Type program»

**Material**

- Valve body: grey, cast iron
- Valve housing materials: brass
- Sight glass: heat- and impact resistant plastic
- Seals: EPDM

**Fluids**

- Heating water (VDI 2035; SWKI BT 102-01; ÖNORM H 5195–1)
- Water and proprietary additives used against corrosion and freezing up to 50%

## TYPE PROGRAM

TacoSetter Bypass Flange | Balancing valve

| Order no. | DN | Measuring range | Weight | $k_{VS}$ (m³/h) |
|---|---|---|---|---|
| 223.2151.000 | 65 | 60 – 325 (l/min) | 13,9 kg | 85,0 |
| 223.2251.000 | 80 | 75 – 450 (l/min) | 16,5 kg | 166,0 |
| 223.2351.000 | 100 | 100 – 650 (l/min) | 19,7 kg | 208,0 |

## DIMENSIONAL DRAWING

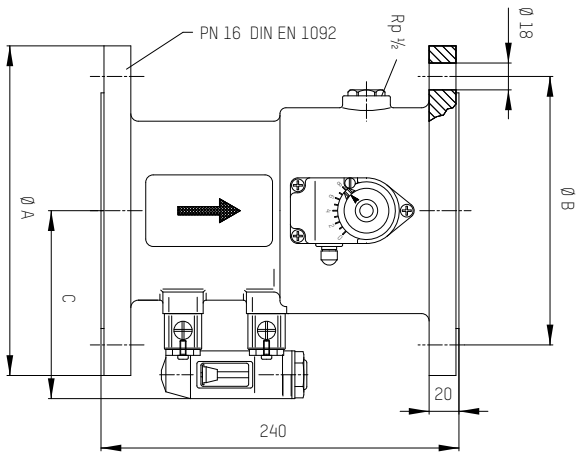


## MEASUREMENT TABLE

TacoSetter Bypass Flange | Balancing valve

| Order no. | DN | A | B | C | ø 18 |
|---|---|---|---|---|---|
| 223.2151.000 | 65 | 185 | 145 | 110 | 4 holes |
| 223.2251.000 | 80 | 200 | 160 | 118 | 8 holes |
| 223.2351.000 | 100 | 220 | 180 | 128 | 8 holes |

## SPARE PARTS

## SIGHT GLASS (COMPLETE) AND SEAL

| Order no. | Range | Fits to |
|---|---|---|
| 298.2321.000 | 60 – 325 (l/min) | 223.2151.000 |
| 298.2322.000 | 75 – 450 (l/min) | 223.2251.000 |
| 298.2323.000 | 100 – 650 (l/min) | 223.2351.000 |

## PRESSURE LOSS DIAGRAM

**223.2151.000** (DN 65 | 60...325 l/min)

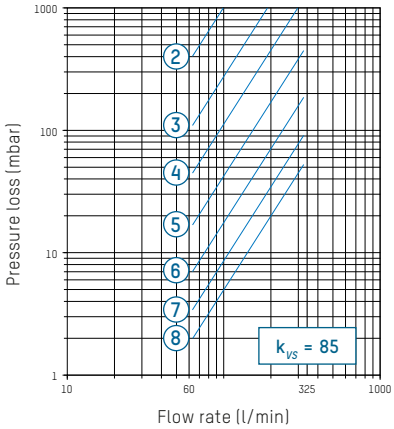


**2 – 8** Valve position

**223.2251.000** (DN 80 | 75...450 l/min)

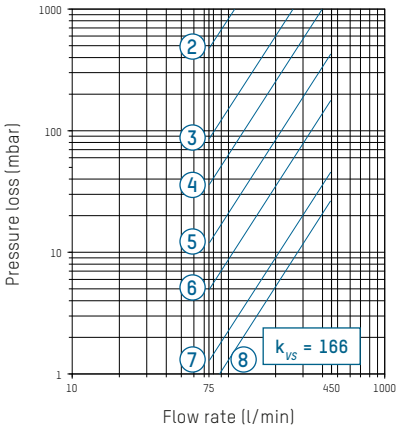


**2 – 8** Valve position

**223.2351.000** (DN 100 | 100...650 l/min)

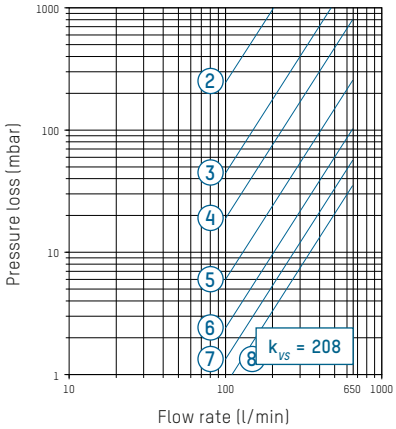


**2 – 8** Valve position

Subject to modification. 12/2020

**CONTACT AND FURTHER INFORMATION** **TACONOVA.COM**

**Taconova Group AG** | Neunbrunnenstrasse 40 | CH-8050 Zurich | T +41 44 735 55 55 | F +41 44 735 55 02 | group@taconova.com

taconova

# TACOSETTER BYPASS SOLAR 130

## BALANCING VALVE

### ADVANTAGES

- Accurate and fast adjustment with scale and without the aid of diagrams, tables or measurement devices
- Direct reading of the set volume flow in l/min
- Temperature-resistant up to 130 °C
- Variable installation position, maintenance-free
- Flow control with setpoint adjuster
- Regulating valve with isolating facility (rest leakage possible)
- Minimal pressure loss

Direct regulation, indication and isolation of flows in solar systems

### DESCRIPTION

Direct hydraulic balancing and control of flows to consumers or in a subsystem. TacoSetter Bypass Solar 130 balancing valves offer an easy and accurate method of adjusting the flow rates for heating-, ventilation-, air conditioning- and cooling systems.
Correct balancing of hydraulic circuits ensures optimum energy distribution, resulting in more efficient and economical operation in accordance with the energy saving regulations provided for by legislation.

With TacoSetter Bypass Solar 130 balancing valves, any qualified fitter can set the appropriate flow rate using the unique flow measurement device, avoiding investments in training and costly measuring devices.

### INSTALLATION POSITION

The TacoSetter Bypass Solar 130 requires a straight section of pipe of the same length and diameter as the system. The valve can be installed in a horizontal, vertical or inclined position.
Care should be taken that the arrow is pointing in the direction of the flow.

### OPERATION

The flow measurement is based on the principle of a baffle float with return spring. The reading position is the bottom line of the baffle float. The measuring device is placed in a bypass to the main flow, isolated from system flow. By demand the bypass, with self locking valves, gets opened / closed by pressing / releasing the clamp. Reading the flow rate has no influence on the main flow rate.

### BUILDING CATEGORIES

For pipe installations in drinking water, heating and cooling area:

- Apartment blocks, housing estates, multiple dwelling units
- Residential care facilities and hospitals
- Administration and service buildings
- Hotels and restaurants, industrial kitchens
- School buildings and sports facilities
- Commercial and industrial buildings
- Facilities with partial use, such as barracks, camping sites

### SYSTEM/BASIC DIAGRAM

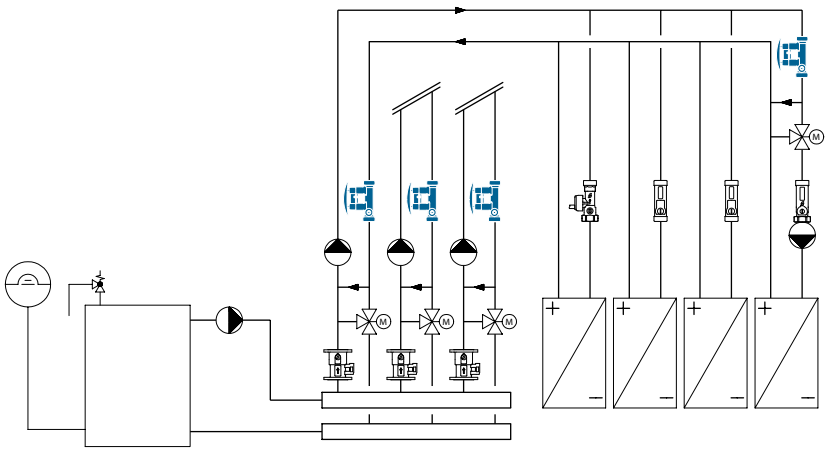

## SPECIFICATION TEXT

See www.taconova.com

## TECHNICAL DATA

**General**

- Max. temperature and pressure range: $T_{0\,max}$ and $P_{0\,max}$:
  See pressure-temperature curve
- Measuring accuracy:
  - Measuring range <25%:
    ±20% of the indicated value
  - Measuring range >25%:
    ±10% of the indicated value
- $k_{VS}$ value and measurement range see "Type overview"
- Female thread to DIN 2999 / ISO 7 or male thread G (cylindrical) to ISO 228

**Material**

- Housing: brass
- Inside: stainless steel, brass, plastic
- Sight glass: plastic
- Seals: EPDM

**Fluids**

- Heating water (VDI 2035; SWKI BT 102-01; ÖNORM H 5195–1)
- Water and proprietary additives used against corrosion and freezing up to 50% (see document «Correction curves»)

## ADDITIONAL MODELS

Balancing valves for other applications, see data sheets TacoSetter Bypass 100 and TacoSetter Bypass Solar 185.

## TYPE OVERVIEW

TacoSetter Bypass Solar 130 | Balancing valve with female thread

| Order no. | DN | Rp × Rp | Measuring range | $k_{VS}$ (m³/h) |
|---|---|---|---|---|
| 223.2380.000 | 20 | ¾" × ¾" | 2 – 12 (l/min) | 2,2 |
| 223.2381.000 | 20 | ¾" × ¾" | 8 – 20 (l/min) | 5,0 |
| 223.2482.000 | 25 | 1" × 1" | 10 – 40 (l/min) | 8,1 |

TacoSetter Bypass Solar 130 | Balancing valve with male thread

| Order no. | DN | G × G | Measuring range | $k_{VS}$ (m³/h) |
|---|---|---|---|---|
| 223.2380.350 | 20 | 1" × 1" | 2 – 12 (l/min) | 2,2 |
| 223.2381.350 | 20 | 1" × 1" | 8 – 20 (l/min) | 5,0 |
| 223.2482.350 | 25 | 1 ¼" × 1 ¼" | 10 – 40 (l/min) | 8,1 |

## DIMENSIONAL DRAWING

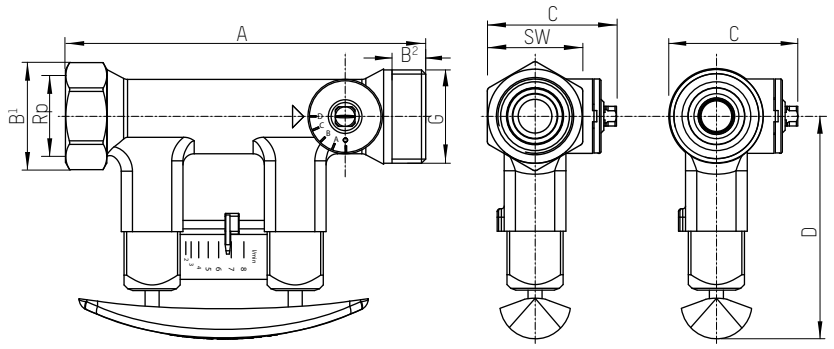


## MEASUREMENT TABLE

TacoSetter Bypass Solar 130 | Balancing valve with female thread

| Order no. | DN | A | B¹ | C | D | SW | Rp |
|---|---|---|---|---|---|---|---|
| 223.2380.000 | 20 | 129 | 39 | 46 | 79 | 34 | ¾" |
| 223.2381.000 | 20 | 129 | 39 | 46 | 79 | 34 | ¾" |
| 223.2482.000 | 25 | 152 | 47 | 58 | 82 | 41 | 1" |

TacoSetter Bypass Solar 130 | Balancing valve with male thread

| Order no. | DN | A | B² | C | D | G |
|---|---|---|---|---|---|---|
| 223.2380.350 | 20 | 129 | 12 | 46 | 79 | 1" |
| 223.2381.350 | 20 | 129 | 12 | 46 | 79 | 1" |
| 223.2482.350 | 25 | 152 | 15 | 58 | 82 | 1 ¼" |

## GLYCOL CORRECTION CURVES

There is a separate diagram for TacoSetter up to DN25 and its flow ranges with nine correction curves for use of anti-frost and anti-corrosion agents.
Corrections are not required for larger dimensions as the deviation lies within the measuring tolerance.
See www.taconova.com

## PRESSURE – TEMPERATURE CURVE

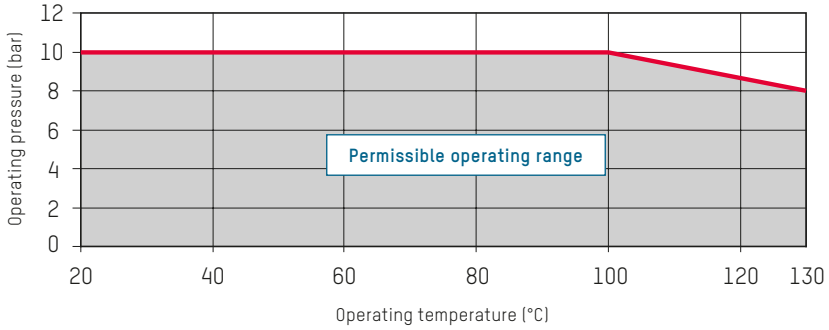


## PRESSURE LOSS DIAGRAMS

**223.2380.000** (DN 20 | ¾" | 2...12 l/min)
**223.2380.350** (DN 20 | 1" | 2...12 l/min)

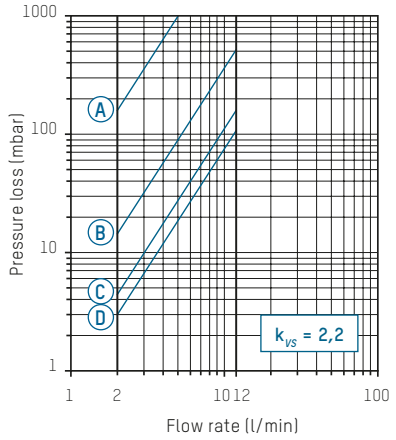


**A – D** Valve position

**223.2381.000** (DN 20 | ¾" | 8...20 l/min)
**223.2381.350** (DN 20 | 1" | 8...20 l/min)

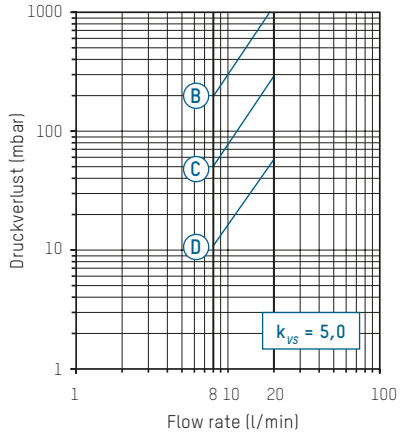


**B – D** Valve position

**223.2482.000** (DN 25 | 1" | 10...40 l/min)
**223.2482.000** (DN 25 | 1¼" | 10...40 l/min)

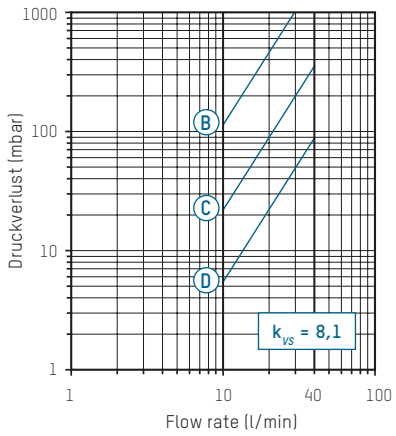


**B – D** Valve position

## ACCESSORIES

### INSULATION BOX

EPP, $T_0$ -30 – 130 °C, in accordance with EnEV guideline

| Order no. | Fits |
|---|---|
| 296.2321.004 | DN 20 |
| 296.2322.004 | DN 25 |

### SYSTEM SCREW CONNECTION FITS TO TACOSETTER BYPASS SOLAR 130

Screw connection with male thread R (conical) as per DIN 2999

| Order no. | G x R | Version for | Fits to |
|---|---|---|---|
| 210.6630.000 | ¾" x ½" | Inner thread Rp ½" | DN 15 |
| 210.6631.000 | 1" x ½" | Inner thread Rp ½" | DN 15 |
| 210.6632.000 | 1" x ¾" | Inner thread Rp ¾" | DN 20 |
| 210.6633.000 | 1¼" x 1" | Inner thread Rp 1" | DN 25 |

Screw connection with solder connection

| Order no. | G x mm | Version for | Fits to |
|---|---|---|---|
| 210.5331.019 | 1" x 18 | Copper pipe ø 18 mm | DN 15 (Male) |
| 210.5332.019 | 1" x 22 | Copper pipe ø 22 mm | DN 20 (Male) |
| 210.5334.003 | 1¼" x 28 | Copper pipe ø 28 mm | DN 25 (Male) |

## SPARE PARTS

### SIGHT GLASS (COMPLETE) AND SEALS

| Order no. | Range | Fits to |
|---|---|---|
| 298.2336.020 | 2 – 12 (l/min) | 223.2380.000 / 223.2380.350 |
| 298.2337.020 | 8 – 20 (l/min) | 223.2381.000 / 223.2381.350 |
| 298.2344.020 | 10 – 40 (l/min) | 223.2482.000 / 223.2482.350 |

Subject to modification. 11/2020

CONTACT AND FURTHER INFORMATION TACONOVA.COM

Taconova Group AG | Neunbrunnenstrasse 40 | CH-8050 Zurich | T +41 44 735 55 55 | F +41 44 735 55 02 | group@taconova.com

taconova

# TACOSETTER BYPASS SOLAR 185

## BALANCING VALVE

### ADVANTAGES

- Accurate and fast adjustment with scale and without the aid of diagrams, tables or measurement devices
- Direct reading of the set volume flow in l/min
- Temperature-resistant up to 185 °C
- Variable installation position, maintenance-free
- Flow control with setpoint adjuster
- Regulating valve with isolating facility (rest leakage possible)
- Minimal pressure loss

Direct regulation, indication and isolation of flows in solar systems.

### DESCRIPTION

Direct hydraulic balancing and control of flows to consumers or in a subsystem. Balancing valves offer an easy and accurate method of adjusting the flow rates for heating-, ventilation-, air conditioning - and solar systems.
The Version TacoSetter Bypass Solar 185 is designed for higher operating temperatures.
Correct balancing of hydraulic circuits ensures optimum energy distribution, resulting in more efficient and economical operation in accordance with the energy saving regulations provided for by legislation.

With TacoSetter Bypass Solar 185 balancing valves, any qualified fitter can set the appropriate flow rate using the unique flow measurement device, avoiding investments in training and costly measuring devices.

### INSTALLATION POSITION

The TacoSetter Bypass Solar 185 requires a straight section of pipe of the same length and diameter as the system. The valve can be installed in a horizontal, vertical or inclined position. Care should be taken that the arrow is pointing in the direction of the flow.

In the case of the high-temperature type, the bypass unit is replaced by the sealing cap set after adjustment.

### OPERATION

The flow measurement is based on the principle of a baffle float with return spring. The reading position is the bottom line of the baffle float. The measuring device is placed in a bypass to the main flow, isolated from system flow. By demand the bypass, with self locking valves, gets opened / closed by pressing / releasing the clamp. Reading the flow rate has no influence on the main flow rate.

### BUILDING CATEGORIES

For pipe installations in heating and cooling area:

- Apartment blocks, housing estates, multiple dwelling units
- Residential care facilities and hospitals
- Administration and service buildings
- Hotels and restaurants, industrial kitchens
- School buildings and sports facilities
- Commercial and industrial buildings
- Facilities with partial use, such as barracks, camping sites

### SYSTEM/BASIC DIAGRAM

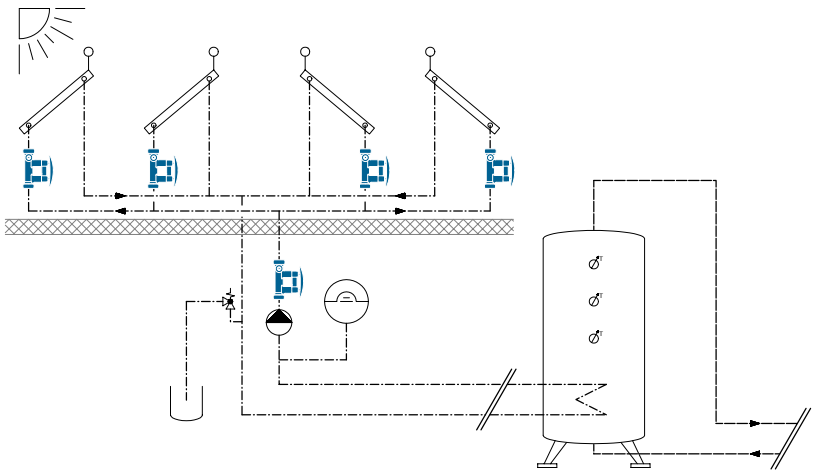

# TACOSETTER BYPASS SOLAR 185 | BALANCING VALVE

## SPECIFICATION TEXT

See www.taconova.com

## TECHNICAL DATA

**General**

- Admissible operating parameters $T_{0\,max}$ und $P_{0\,max}$: see pressure temperature curve
- Measuring accuracy:
  - Measurement range <25%: ±20% of the indicated value
  - Measurement range >25%: ±10% of the indicated value
- $k_{VS}$ value and measurement range: see "Type Program"
- Female thread to DIN 2999 / ISO 7 or male thread G (cylindrical) to ISO 228

**Material**

- Housing: brass
- Inside: stainless steel, brass, plastic
- Sight glass: heat- and impact-resistant plastic
- Sealing: EPDM

**Fluids**

- Heating water (VDI 2035; SWKI BT 102-01; ÖNORM H 5195–1)
- Water and proprietary additives used against corrosion and freezing up to 50% (see document «Correction curves»)

## ADDITIONAL MODELS

Balancing valves for solar applications, see TacoSetter Bypass 100 and TacoSetter Bypass Solar 130 data sheets.

## TYPE OVERVIEW

TacoSetter Bypass Solar 185 | Balancing valve with female thread (incl. sealing cap set)

| Order no. | DN | Rp × Rp | Measuring range | $k_{VS}$ (m³/h) |
|---|---|---|---|---|
| 223.2382.000 | 20 | ¾" × ¾" | 2 – 12 (l/min) | 2,2 |
| 223.2383.000 | 20 | ¾" × ¾" | 8 – 30 (l/min) | 5,0 |
| 223.2480.000 | 25 | 1" × 1" | 10 – 40 (l/min) | 8,1 |
| 223.2580.000 | 32 | 1¼" × 1¼" | 20 – 70 (l/min) | 17,0 |

TacoSetter Bypass Solar 185 | Balancing valve with male thread (incl. sealing cap set)

| Order no. | DN | G × G | Measuring range | $k_{VS}$ (m³/h) |
|---|---|---|---|---|
| 223.2382.385 | 20 | 1" × 1" | 2 – 12 (l/min) | 2,2 |
| 223.2383.385 | 20 | 1" × 1" | 8 – 30 (l/min) | 5,0 |

## DIMENSIONAL DRAWING

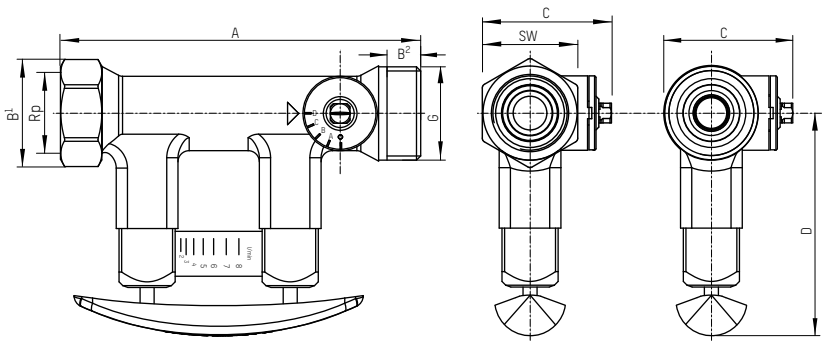


## MEASUREMENT TABLE

TacoSetter Bypass Solar 185 | Balancing valve with female thread

| Order no. | DN | A | B¹ | C | D | SW | Rp |
|---|---|---|---|---|---|---|---|
| 223.2382.000 | 20 | 129 | 39 | 46 | 79 | 34 | ¾" |
| 223.2383.000 | 20 | 129 | 39 | 46 | 79 | 34 | ¾" |
| 223.2480.000 | 25 | 152 | 47 | 58 | 82 | 41 | 1" |
| 223.2580.000 | 32 | 161 | 56 | 65 | 84 | 49 | 1" |

TacoSetter Bypass Solar 185 | Balancing valve with male thread

| Order no. | DN | A | B² | C | D | G |
|---|---|---|---|---|---|---|
| 223.2382.385 | 20 | 129 | 12 | 46 | 79 | 1" |
| 223.2383.385 | 20 | 129 | 12 | 46 | 79 | 1" |

## GLYCOL CORRECTION CURVES

There is a separate diagram for TacoSetter up to DN25 and its flow ranges with nine correction curves for use of anti-frost and anti-corrosion agents.
Corrections are not required for larger dimensions as the deviation lies within the measuring tolerance.
See www.taconova.com

## PRESSURE – TEMPERATURE-CHARACTERISTIC

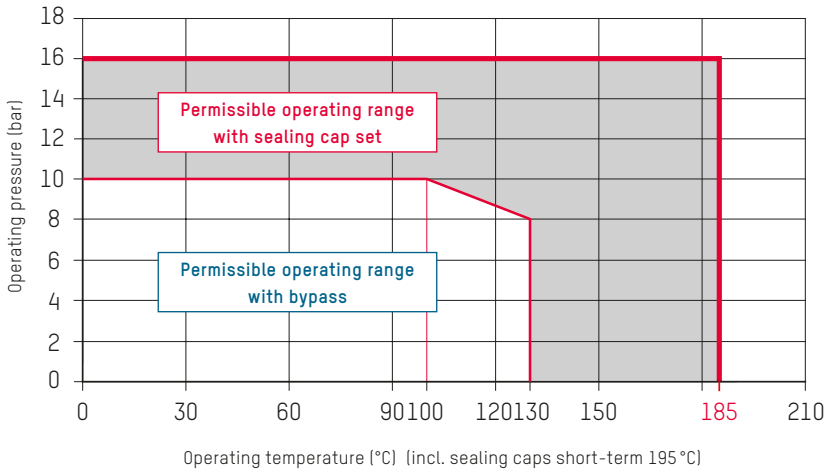


## PRESSURE LOSS DIAGRAMS

**223.2382.XXX** (DN 20 | ¾" | 2...12 l/min)

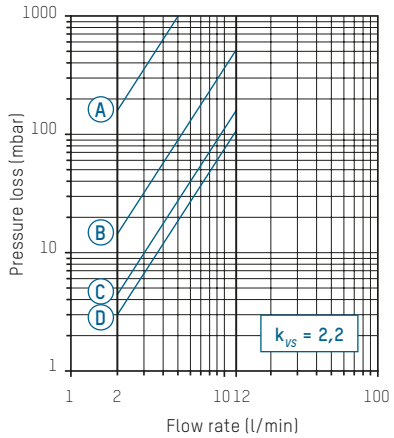


**A – D** Valve position

**223.2383.XXX** (DN 20 | ¾" | 8...30 l/min)

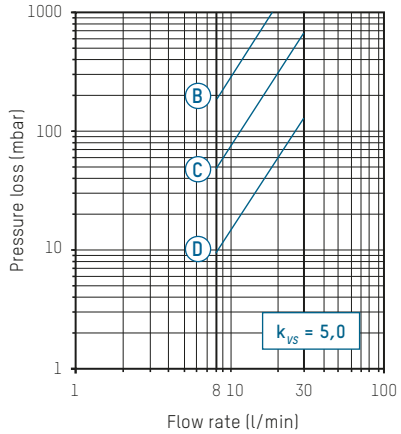


**B – D** Valve position

**223.2480.XXX** (DN 25 | 1" | 10...40 l/min)

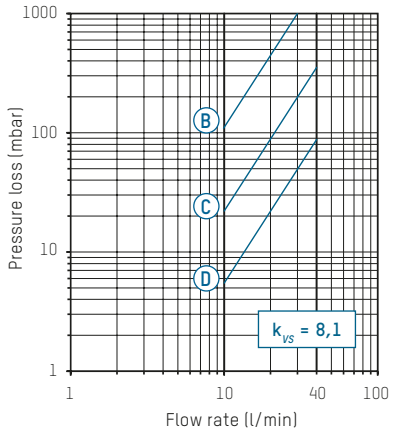


**B – D** Valve position

**223.2580.000** (DN 32 | 1¼" | 20...70 l/min)

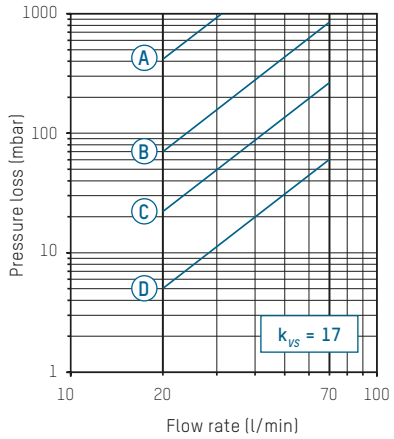


**A – D** Valve position

## ACCESSORIES

### SYSTEM SCREW CONNECTION FITS TO TACOSETTER BYPASS

Screw connection with male thread R (conical) as per DIN 2999

| Order no. | G x R | Version for | Fits to |
|---|---|---|---|
| 210.6630.000 | ¾" x ½" | Threaded pipe Rp ½" | DN 15 |
| 210.6631.000 | 1" x ½" | Threaded pipe Rp ½" | DN 15 |
| 210.6632.000 | 1" x ¾" | Threaded pipe Rp ¾" | DN 20 |
| 210.6633.000 | 1¼" x 1" | Threaded pipe Rp 1" | DN 25 |

Screw connection with solder connection

| Order no. | G x mm | Version for | Fits to |
|---|---|---|---|
| 210.5331.019 | 1" x 18 | Copper pipe ø 18 mm | DN 15 AG |
| 210.5332.019 | 1" x 22 | Copper pipe ø 22 mm | DN 20 AG |
| 210.5334.003 | 1¼" x 28 | Copper pipe ø 28 mm | DN 25 AG |

## SPARE PARTS

### SIGHT GLASS (COMPLETE) AND SEAL

| Order no. | Range | Fits to |
|---|---|---|
| 298.2336.020 | 2 – 12 (l/min) | 223.2380.000 / 223.2380.350 |
| 298.2337.020 | 8 – 20 (l/min) | 223.2381.000 / 223.2381.350 |
| 298.2338.020 | 8 – 30 (l/min) | 223.2383.000 / 223.2383.385 |
| 298.2344.020 | 10 – 40 (l/min) | 223.2482.000 / 223.2482.350 |

### SEALING CAP SET FOR TACOSETTER BYPASS 130/185

| Order no. | Fits to |
|---|---|
| 296.2340.003 | all versions |

Included with delivery for Solar 185 model

Subject to modification. 11/2020

CONTACT AND FURTHER INFORMATION TACONOVA.COM

Taconova Group AG | Neunbrunnenstrasse 40 | CH-8050 Zurich | T +41 44 735 55 55 | F +41 44 735 55 02 | group@taconova.com

taconova

# TACOCONTROL FLOWMETER

## FLOW INDICATOR

### ADVANTAGES

- The flow rate is displayed directly in l/min
- Accurate and quick indication of flow rates without additional measuring devices
- Low pressure loss
- Eurocone bore hole
- Can be installed in any position
- Compact design

Direct indications of flows in hydraulic systems.

### DESCRIPTION

The FlowMeter offers an accurate and convenient indication of flow rates in heating -, ventilation -, air conditioning- and cooling systems.
Due to the compact design of the FlowMeter, the installation of a flow rate indicator is possible, even at most limited space.
The particular connection is suitable for a direct and economic fit to components with eurocone adaptors.
Installed on heating manifolds or on a valve, the FlowMeter forms an economical extension of the function with big benefits.
For example, each throttle valve in addition with a FlowMeter turns into a multi function valve for the balancing and the indication of flow rates.
With the FlowMeter, any qualified fitter can read the appropriate flow rate easily on site, without any additional measuring device or special training

### INSTALLATION POSITION

The valve can be installed in a horizontal, vertical or inclined position.
Care should be taken in order to ensure that the arrow is pointing in the direction of the flow
Noise can be avoided by installing a short calming section in front of the flow meter.

### OPERATION

The flow measurement is based on the principle of a baffle float with countersprings.
The flow rate is displayed on a calibrated scale by an integrated flowmeter.
The reading position is the bottom line of the baffle float.

### BUILDING CATEGORIES

For pipe installations in heating and cooling area:

- Apartment blocks, housing estates, multiple dwelling units
- Residential care facilities and hospitals
- Administration and service buildings
- Hotels and restaurants, industrial kitchens
- School buildings and sports facilities
- Commercial and industrial buildings

### SYSTEM/BASIC DIAGRAM

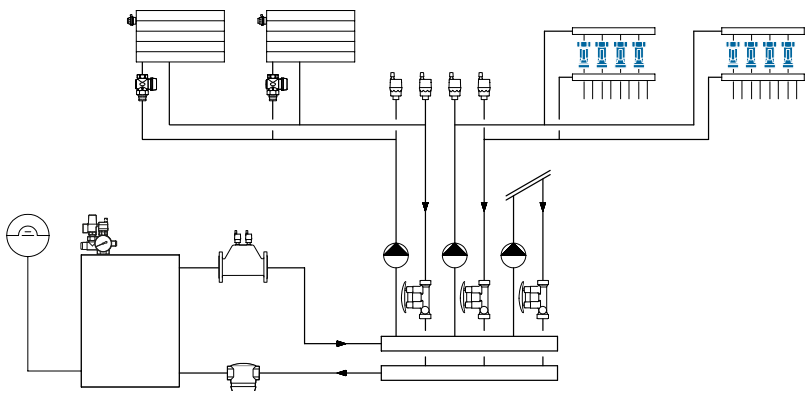

## SPECIFICATION TEXT

See www.taconova.com

## TECHNICAL DATA

**General**

- Operating temperature $T_{0\,max}$: 100 °C
- Operating pressure $P_{0\,max}$: 10 bar
- Measuring accuracy: ±10 % of the indicated value
- $k_{VS}$ value and measurement range see «Type overview»
- Thread G (cylindrical) to ISO 228
- With 18 mm hole for Taconova and all Eurokonus screw

**Material**

- Housing: brass
- Inside: stainless steel, brass, plastic
- Sight glass: heat- and impact resistant plastic
- Seals: EPDM

**Fluids**

- Heating water (VDI 2035; SWKI BT 102-01; ÖNORM H 5195–1)
- Potable water (DIN 1988-200)
- Water and proprietary additives used against corrosion and freezing up to 50%

## APPROVALS / CERTIFICATES

- Housing parts: KTW, W270, ACS

## DIMENSIONAL DRAWING

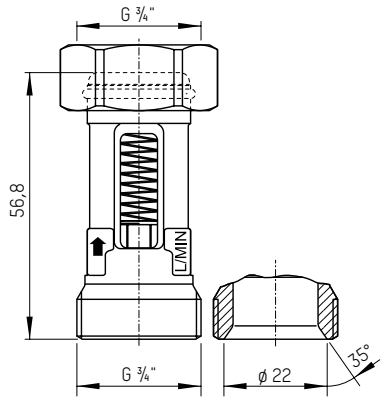


## TYPE OVERVIEW

TacoControl FlowMeter | Flow meter with direct indication

| Order no. | DN | G×G | Measuring range | $k_{VS}$ (m³/h) |
|---|---|---|---|---|
| 223.4213.000 | 15 | ¾"×¾" | 0,6 – 2,4 (l/min) | 0.5 |
| 223.4214.000 | 15 | ¾"×¾" | 1,0 – 3,5 (l/min) | 1.1 |
| 223.4218.000 | 15 | ¾"×¾" | 2,0 – 8,0 (l/min) | 1.6 |
| 223.4219.000 | 15 | ¾"×¾" | 3,0 – 12,0 (l/min) | 1.65 |

## PRESSURE LOSS DIAGRAMS

**223.4213.000** (DN 15 | ¾" | 0,6...2,4 l/min)

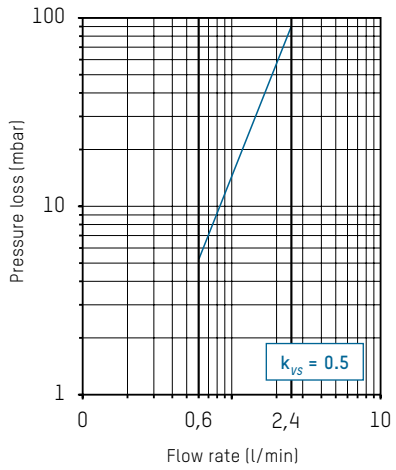


**223.4214.000** (DN 15 | ¾" | 1,0...3,5 l/min)

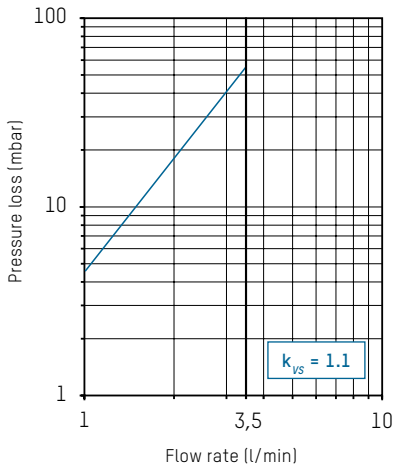


**223.4218.000** (DN 15 | ¾" | 2,0...8,0 l/min)

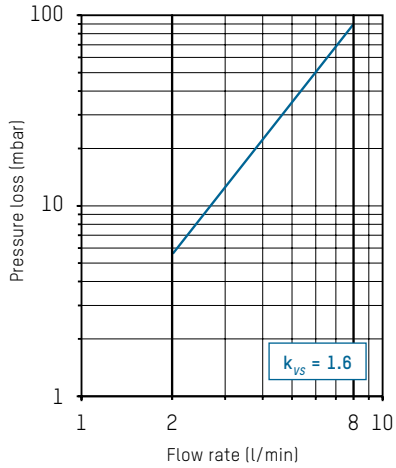


**223.4219.000** (DN 15 | ¾" | 3,0...12,0 l/min)

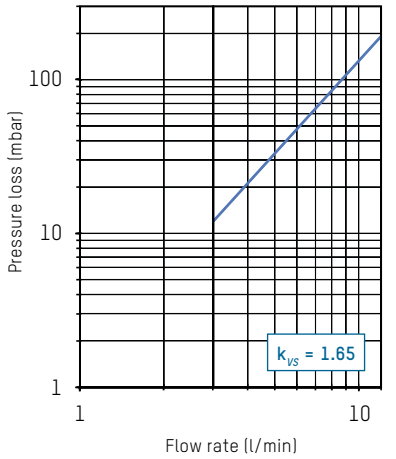


CONTACT AND FURTHER INFORMATION TACONOVA.COM

Taconova Group AG | Neunbrunnenstrasse 40 | CH-8050 Zurich | T +41 44 735 55 55 | F +41 44 735 55 02 | group@taconova.com

Subject to modification. 12/2017

taconova

# TACOSETTER INLINE 130

## BALANCING VALVE

### ADVANTAGES

- Accurate and fast adjustment with scale and without the aid of diagrams, tables or measurement devices
- Direct reading of the set volume flow in l/min
- Temperature-resistant up to 130 °C
- Variable installation position, maintenance-free
- Regulating valve with isolating facility (rest leakage possible)

Direct regulation, indication and isolation of flows in systems.

### DESCRIPTION

Direct hydraulic balancing and control of flows: TacoSetter Inline 130 balancing valves offer an easy and accurate method of adjusting the flow rates through heating, geothermal, ventilation, air conditioning and cooling systems.
Correct balancing of hydraulic circuits ensures optimum energy distribution, resulting in more efficient and economical operation in accordance with the energy saving regulations provided for by legislation.
With TacoSetter Inline 130 balancing valves, any qualified fitter can set the appropriate flow rate on the premises in question, thus avoiding investments in training and costly measuring devices.

### INSTALLATION POSITION

The valve can be installed in a horizontal, vertical or inclined position. Care should be taken to ensure that the arrow is pointing in the direction of the flow.
The ¾" version with union nut and Euro cone can be connected directly to an underfloor heating circuit. The version with 1" union nut directly to a circulation pump.

### OPERATION

The flow measurement is based on the principle of a baffle float with return spring. The flowmeter is built into the housing.

The balancing can be carried out with a screwdriver at the adjusting screw. The reading position is the bottom line of the baffle float.

### BUILDING CATEGORIES

For pipe installations in heating area:

- Apartment blocks, housing estates, multiple dwelling units
- Residential care facilities and hospitals
- Administration and service buildings
- Hotels and restaurants, industrial kitchens
- School buildings and sports facilities
- Commercial and industrial buildings
- Facilities with partial use, such as barracks, camping sites

### SYSTEM/BASIC DIAGRAM

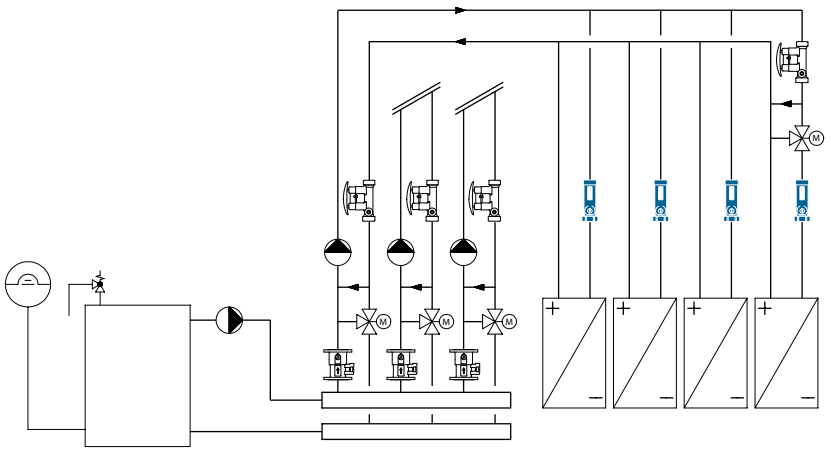

### NOTE

Important when using glycol

The system medium must be allowed to flow through the measuring body for at least 2 hours prior to reading the flow rate when performing the initial start-up or refilling the system

## SPECIFICATION TEXT

See www.taconova.com

## TECHNICAL DATA

**General**

- Operating temperature $T_{0\,max}$: 130 °C
- Operating pressure $P_{0\,max}$: 10 bar
- Measuring accuracy: ±10% of the indicated value
- $k_{VS}$ value and measurement range see «Type overview»
- Connections:
  - ¾" euro cone
  - 1", 1¼", 1½" flat-sealing connector
- Thread G (cylindrical) acc. to ISO 228

**Material**

- Housing: see «Type overview»
- Inside: stainless steel, brass, plastic
- Sight glass: borosilicate
- Seals: EPDM
- Flat-sealing connections

**Fluids**

- Heating water (VDI 2035; SWKI BT 102-01; ÖNORM H 5195-1)
- Potable water (DIN 1988-200)
- Water and proprietary additives used against corrosion and freezing up to 50%

## APPROVALS / CERTIFICATES

- KTW, W270

## TYPE OVERVIEW

TacoSetter Inline 130 | Balancing valve made of dezincification-resistant (DZR) brass with male thread and euro cone (**A**)

| Order no. | DN | G × G | Measuring range | $k_{VS}$ (m³/h) |
|---|---|---|---|---|
| 223.7234.104 | 15 | ¾" × ¾" | 1,0 – 3,5 (l/min) | 1,35 |
| 223.7238.104 | 15 | ¾" × ¾" | 2,0 – 8,0 (l/min) | 1,8 |

TacoSetter Inline 130 | Balancing valve made of brass with lock nut and euro cone (**B**)

| Order no. | DN | G × G | Measuring range | $k_{VS}$ (m³/h) |
|---|---|---|---|---|
| 223.7318.000 | 20 | ¾" × ¾" | 2,0 – 8,0 (l/min) | 1,6 |
| 223.7310.000 | 20 | ¾" × ¾" | 4,0 – 15,0 (l/min) | 5,95 |
| 223.7312.000 | 20 | ¾" × ¾" | 10,0 – 30,0 (l/min) | 6,6 |

TacoSetter Inline 130 | Balancing valve made of brass with cutting ring connection Ø 22 (**C**) (Also suitable for flat-sealing connection)

| Order no. | DN | G × G | Measuring range | $k_{VS}$ (m³/h) |
|---|---|---|---|---|
| 223.7370.000 | 20 | 1" × 1" | 4,0 – 15,0 (l/min) | 5,95 |
| 223.7378.000 | 20 | 1" × 1" | 10,0 – 45,0 (l/min) | 6,85 |

TacoSetter Inline 130 | Balancing valve made of brass with male thread (**D**)

| Order no. | DN | G × G | Measuring range | $k_{VS}$ (m³/h) |
|---|---|---|---|---|
| 223.7427.000 | 25 | 1" × 1" | 20,0 – 90,0 (l/min) | 17,0 |
| 223.7457.000 | 25 | 1¼" × 1¼" | 20,0 – 90,0 (l/min) | 17,0 |
| 223.7467.000 | 25 | 1½" × 1½" | 20,0 – 90,0 (l/min) | 17,0 |

TacoSetter Inline 130 | Balancing valve made of brass with lock nut and glycol scale (**E**)

| Order no. | DN | G × G | Measuring range * | $k_{VS}$ (m³/h) |
|---|---|---|---|---|
| 223.7556.334 | 20 | 1" × 1" | 1,5 – 6,0 (l/min) | 1,8 |
| 223.7566.334 | 20 | 1" × 1" | 4,0 – 16,0 (l/min) | 4,76 |
| 223.7576.334 | 20 | 1" × 1" | 8,0 – 28,0 (l/min) | 5,44 |

* Reading scale for water-glycol mix with $\upsilon$ = 2,3 mm²/s

TacoSetter Inline 130 | Balancing valve made of brass with lock nut and water scale (**E**)

| Order no. | DN | G × G | Measuring range | $k_{VS}$ (m³/h) |
|---|---|---|---|---|
| 223.7586.000 | 20 | 1" × 1" | 10,0 – 40,0 (l/min) | 5,44 |

## DIMENSIONAL DRAWING

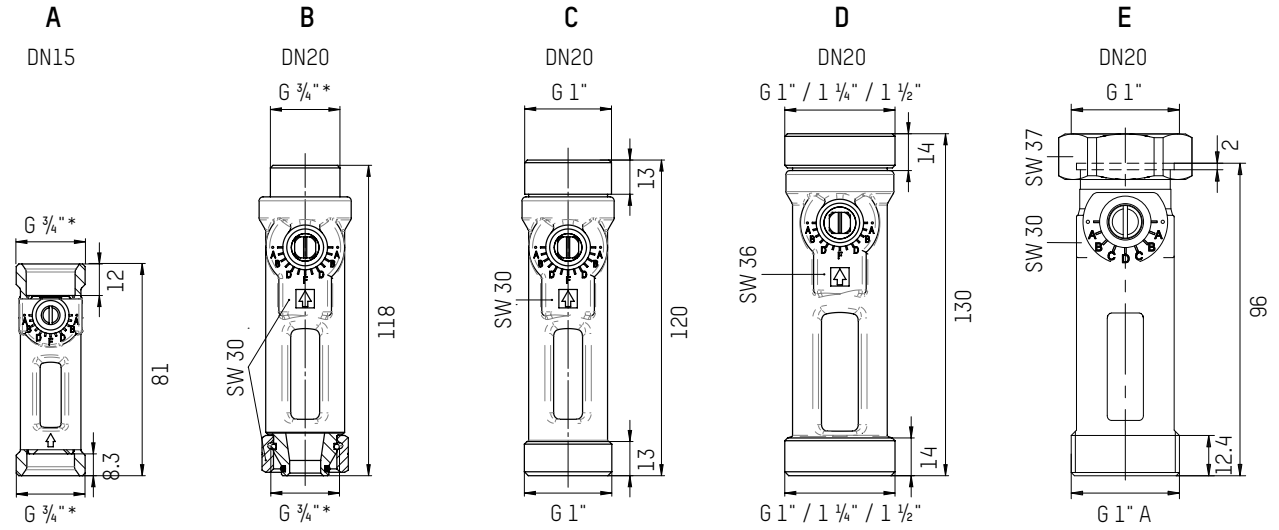


* Euro cone

## PRESSURE LOSS DIAGRAMS

**223.7234.104** (DN 15 | ¾" | 1.0...3.5 l/min)

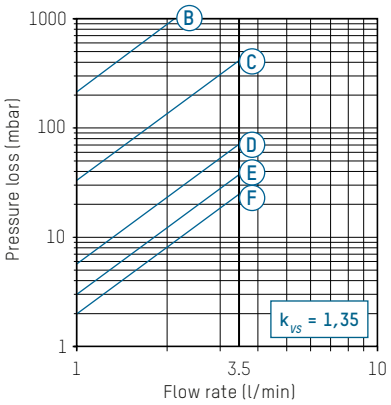


**223.7238.104** (DN 15 | ¾" | 2...8 l/min)

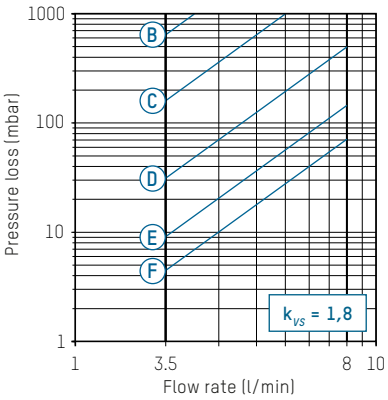


**223.7318.000** (DN 20 | ¾" | 1.5...7.5 l/min)

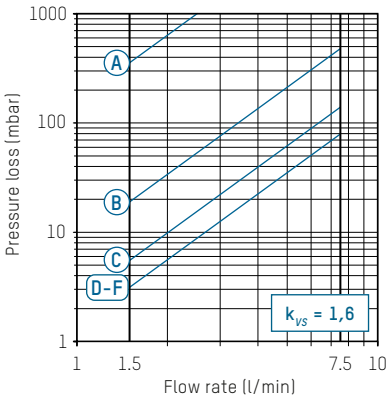


**223.7310.000** (DN 20 | ¾" | 4.0...15.0 l/min)
**223.7370.000** (DN 20 | 1" | 4.0...15.0 l/min)

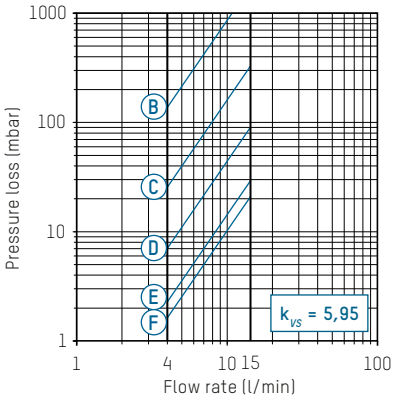


**223.7312.000** (DN 20 | ¾" | 10...30 l/min)

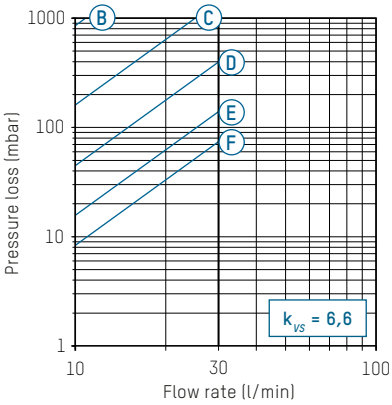


**223.7378.000** (DN 20 | 1" | 10...45 l/min)

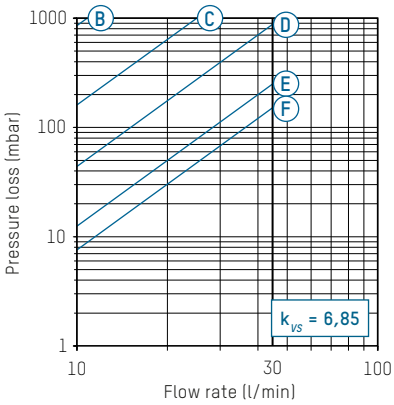


**223.7427.000** (DN25 | 1" | 20.0...90.0 l/min )
**223.7457.000** (DN25 | 1¼" | 20.0...90.0 l/min )
**223.7467.000** (DN25 | 1½" | 20.0...90.0 l/min )

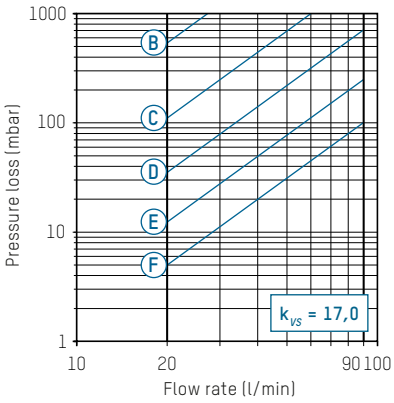


**223.7556.334** (DN 20 | 1" | 1,5...6 l/min)

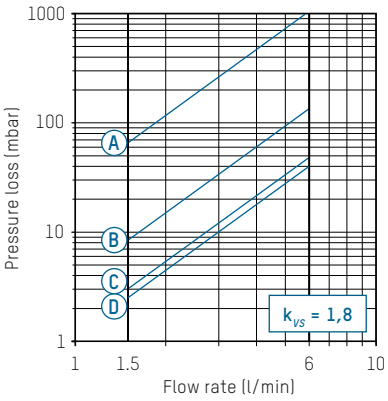


**223.7566.334** (DN 20 | 1" | 4...16 l/min)

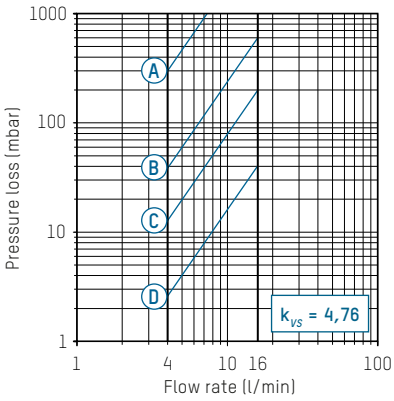


**223.7576.334** (DN 20 | 1" | 8...28 l/min)
**223.7586.000** (DN 20 | 1" | 10...40 l/min)

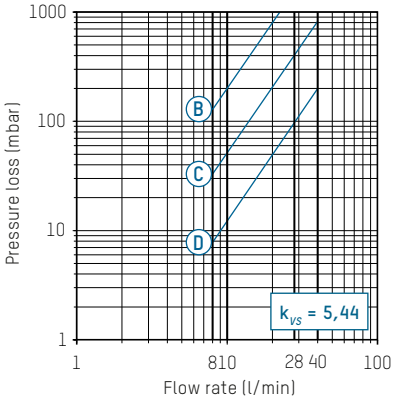


(A) – (F) Valve position

## ACCESSORIES

### CONNECTORS / ACCESSORIES

| Order no. | Description |
|---|---|
| 296.2334.000 | Solar seal suitable 1" (glycol-resistant) |

### SYSTEM SCREW CONNECTION FITS TO TACOSETTER INLINE

Comprising a cap nut, clamp ring and support sleeve

| Order no. | G × mm | Version for | Fits to |
|---|---|---|---|
| 210.3325.000 | ¾" × 15 | Copper pipe 15/1 Eurocone | DN 15 |

Screw connections with cap nut and insert

| Order no. | G × R | Version for | Fits to |
|---|---|---|---|
| 210.6221.000 | ¾" × ½" | ½" thread, conically sealing, dezincification-resistant | DN 15 |
| 210.6632.000 | 1" × ¾" | ¾" thread, flat-sealing | DN 20 |
| 210.6632.121 | 1" × ¾" | ¾" thread, flat-sealing (glycol-resistant seal) | DN 20 |
| 210.6633.000 | 1¼" × 1" | 1" thread, flat-sealing | DN 20 |
| 210.3435.003 | 1" × d22 | Cutting ring d22 | DN 20 |
| 210.3434.003 | 1" × d18 | Cutting ring d18 | DN 20 |
| 210.6222.000 | ¾" × ½" | ½" thread, self-sealing | DN 15 |

Subject to modification. 11/2021

CONTACT AND FURTHER INFORMATION TACONOVA.COM

Taconova Group AG | Neunbrunnenstrasse 40 | CH-8050 Zurich | T +41 44 735 55 55 | F +41 44 735 55 02 | group@taconova.com

taconova

# TACOSETTER RONDO

## BALANCING VALVE

### ADVANTAGES

- Accurate and quick balancing without diagrams, tables or measuring devices
- The flow rate is displayed directly in l/min
- Variable installation position, maintenance-free, compact
- Regulating valve with isolating facility (rest leakage possible)
- Self-sealing screw connector
- Valve adjustment tool integrated in protective cover

Direct regulation and indication of flows to consumers.

### DESCRIPTION

Direct hydraulic balancing and control of flows to consumers. Balancing valves offer a quick, easy and accurate method of adjusting the flow rates through heating, ventilating and air conditioning systems.
Correct balancing of hydraulic circuits allows for lower flow temperatures, resulting in more efficient and economical operation in accordance with the energy saving regulations provided for by legislation.
With TacoSetter Rondo balancing valves, any qualified fitter can set the appropriate water distribution, thus avoiding investments in training and costly measuring devices.

### INSTALLATION POSITION

The balancing valve requires a straight section of pipe of the same length and diameter TacoSetter Rondo.
The valve can be installed in a horizontal, vertical or inclined position.
Care should be taken in order to ensure that the arrow is pointing in the direction of the flow.

### OPERATION

The flow measurement is based on the displacement principle of a baffle disk, which is inserted in a measuring tube. The movement of the baffle disc is transformed to the sight glass by a mechanical device. The scale printed on the sight glass allows the flow rate to be read with ease.

Turning the sight glass changes the opening profile of the valve and allows the desired flow rate to be set.

### BUILDING CATEGORIES

For pipe installations in heating and cooling area:

- Apartment blocks, housing estates, multiple dwelling units
- Residential care facilities and hospitals
- Administration and service buildings
- Hotels and restaurants, industrial kitchens
- School buildings and sports facilities
- Commercial and industrial buildings
- Facilities with partial use, such as barracks, camping sites

### SYSTEM/BASIC DIAGRAM

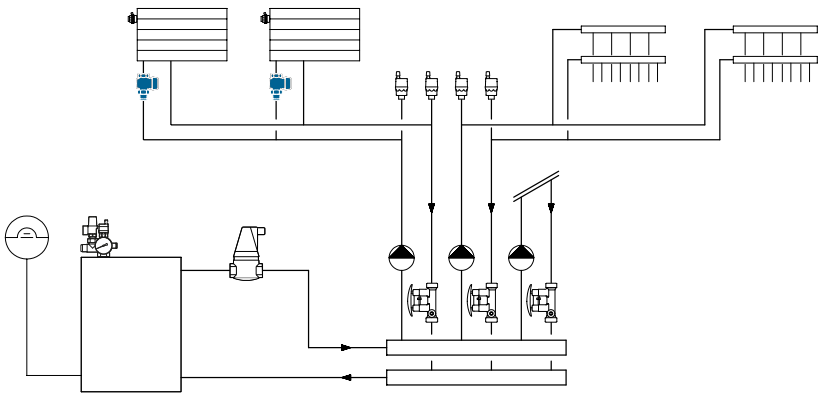

## SPECIFICATION TEXT

See www.taconova.com

## TECHNICAL DATA

**General**

- Admissible operating parameters $T_{0\,max}$ und $P_{0\,max}$: see pressure temperature curve
- Measuring accuracy:
  - <2 l/min: = ±20% of the indicated value
  - >2 l/min: = ±10% of the indicated value
- Female thread to DIN 2999 / ISO 7 or male thread G (cylindrical) to ISO 228

**Material**

- Housing: brass
- Inside: plastic
- Sight glass: heat- and impact-resistant plastic
- Sealing: EPDM

**Fluids**

- Heating water (VDI 2035; SWKI BT 102-01; ÖNORM H 5195–1)
- Water and proprietary additives used against corrosion and freezing up to 50%

## TYPE OVERVIEW

TacoSetter Rondo | Balancing valve with screw connector

| Order no. | DN | Thread | Measuring range | $k_{vs}$ (m³/h) |
|---|---|---|---|---|
| 223.3206.000 ① | 15 | Rp ½" × G ½" | 0 – 8 (l/min) | 1,0 |

TacoSetter Rondo | Balancing valve without screw connector

| Order no. | DN | Thread | Measuring range | $k_{vs}$ (m³/h) |
|---|---|---|---|---|
| 223.3206.325 ① | 15 | Rp ½" × G ¾" | 0 – 8 (l/min) | 1,0 |
| 223.3206.341 ② | 15 | G ¾" × G ¾" | 0 – 8 (l/min) | 1,0 |

## DIMENSIONAL DRAWING

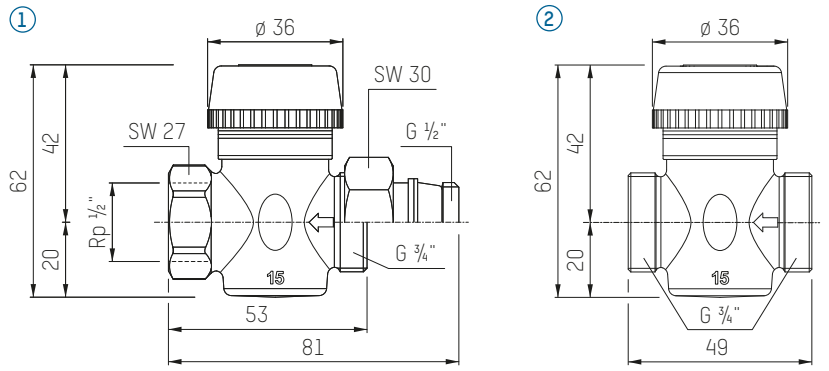


Protective cover fitted

## ACCESSORIES

## SCREW CONNECTIONS FEMALE THREAD RP

Comprises a cap nut and insert

| Order no. | DN | Thread | Version for |
|---|---|---|---|
| 210.6221.000 | 15 | G ¾" × R ½" | ½" thread, conically sealing |
| 210.6222.000 | 15 | G ¾" × R ½" | ½" thread, self-sealing |

## PRESSURE - TEMPERATURE CURVE

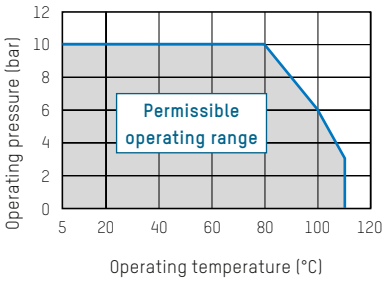


## PRESSURE LOSS DIAGRAM

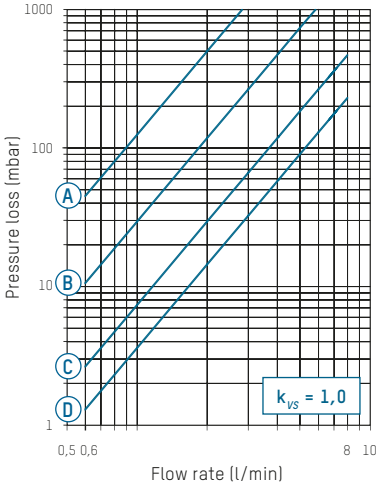


A – D Valve position



Taconova Group AG | Neunbrunnenstrasse 40 | CH-8050 Zurich | T +41 44 735 55 55 | F +41 44 735 55 02 | group@taconova.com

Subject to modification. 01/2022

taconova

# TACOSETTER TRONIC

## BALANCING VALVE

### ADVANTAGES

- Precise and fast electronic measurement of flow volume and temperature
- High measurement precision
- Measurement range 0...100 °C
- Temperature measurement directly in the medium
- Direct connection to circulating pump, variable installation position
- Glycol resistant
- Regulating valve with isolating facility (rest leakage possible)

www.HYG.de geprüft nach KTW

W270

Electronic flow volume and temperature measurement

### DESCRIPTION

Flow volumes and temperatures can be very easily measured and simultaneously evaluated with the TacoSetter Tronic.
The features of the TacoSetter Tronic include its different options for use in drinking water, solar and heating systems.
The electrical signals for flow and temperature can be used for the control and monitoring of pumps and valves, or for heat quantity metering. A controller, from Sorel for example, can be used to display the measurement data.
The control valve can limit or interrupt the flow.

Hydraulically correct balanced systems ensure optimum energy distribution and in this way maintain economic operation as required by the Energy Saving Regulations.

### INSTALLATION POSITION

The valve can be installed in a horizontal, tilted or vertical position. Only the direction of the arrow indicating the flow of the medium needs to be noted.
For horizontal installation, it is recommendable to position the sensor on the upper side in order to prevent deposits occurring.

### OPERATION

The TacoSetter Tronic was developed for the combined measurement of flow volume and temperature. The flow measurement is based on the vortex principle.
The vortex shredding on the body in the flow is proportional to the flow rate.
The generated vortices are detected by a piezoelectric sensor and evaluated by the integrated electronics.

### BUILDING CATEGORIES

For pipe installations in drinking water, heating and cooling area:

- Apartment blocks, housing estates, multiple dwelling units
- Residential care facilities, hospitals
- Administration and service buildings
- Hotels and restaurants, industrial kitchens
- School buildings and sports facilities
- Commercial and industrial buildings
- Facilities with partial use, such as barracks, camping sites

### SYSTEM/BASIC DIAGRAM

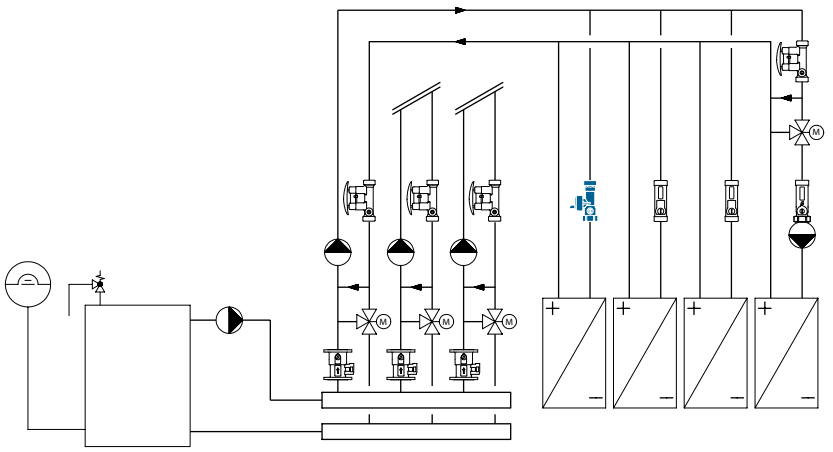

## SPECIFICATION TEXT

See www.taconova.com

## TECHNICAL DATA

**General**

- Operating temperature $T_{0\,max}$: 120 °C
- Operating pressure $P_{0\,max}$: 10 bar
- Measurement temperature range: 0...100 °C
- Measurement precision and range:
  - 1–12 l/min: <3 % of final value
  - 2–40 l/min: 1,5 % of final value
- Viscosity of medium see «Type overview»
- Thread G (cylindrical) as per ISO 228
- 1" flat-sealed connections
- Protective class: IP44a

**Material**

- Housing: brass
- Internal parts: brass, stainless steel, plastic
- Sensor: PPS, PPA, PA
- Seals: EPDM

**Fluids**

- Heating water (VDI 2035; SWKI BT 102-01; ÖNORM H 5195–1)
- Potable water (DIN 1988-200)
- Water and proprietary additives used against corrosion and freezing up to 50%

**Electrical signals for sensors**

1 Temperature: 0.5 to 3.5 V
2 Flow: 0.5 to 3.5 V
3 Ground: 0 V (PE)
4 Supply voltage (+5VDC), PELV

## APPROVALS / CERTIFICATES

**Sensor**

- KTW, W270, ACS, NSF, WRAS

**Housing parts**

- KTW, W270

## TYPE OVERVIEW

TacoSetter Tronic 100 | Balancing and shut-off valve with electronic measurement function

| Order no. | DN | G × G | Measuring range | Viscosity |
|---|---|---|---|---|
| 223.7702.000 | 20 | 1" × 1" A | 1 – 12 (l/min) | ≤ 4 mm²/s |
| 223.7704.000 | 20 | 1" × 1" A | 2 – 40 (l/min) | ≤ 2 mm²/s |

## DIMENSIONAL DRAWING

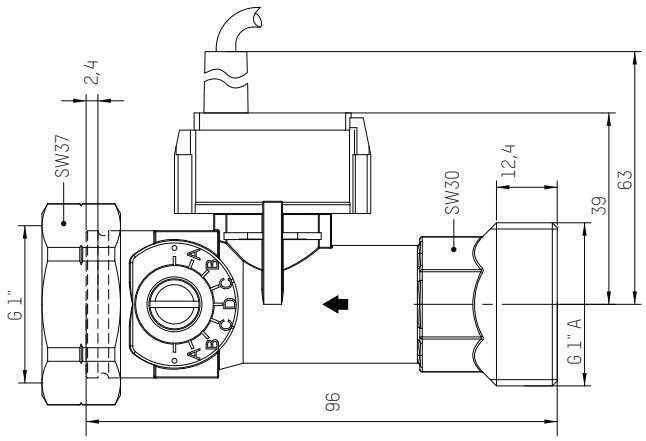


## PRESSURE LOSS DIAGRAMS

**223.7702.000** (DN 20 | 1" | 1...12 l/min)

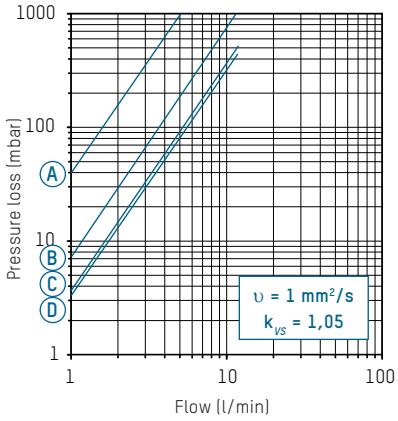


**A – D** Valve position

**223.7704.000** (DN 20 | 1" | 2...40 l/min)

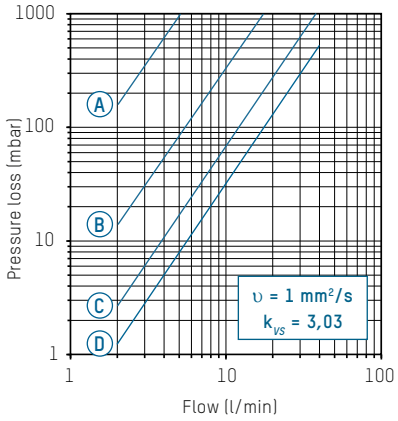


**A – D** Valve position

## ACCESSORIES

### CONNECTIONS

| Order no. | Description |
|---|---|
| 210.6632.121 | flat-sealed screw joint with R ¾"<br>Male threads (glycol-resistant seal) |
| 296.2334.000 | Solar seal 1" (glycol-resistant) |

### REMOTE SENSOR PT1000 (FOR HEAT QUANTITY METERING)

| Order no. | Length | Version |
|---|---|---|
| 296.7015.000 | 0.5 m | Including pipe clamp |

Subject to modification. 10/2019



Taconova Group AG | Neunbrunnenstrasse 40 | CH-8050 Zurich | T +41 44 735 55 55 | F +41 44 735 55 02 | group@taconova.com

taconova

# NOVADRIVE NC/NO

## ACTUATOR

### ADVANTAGES

- Operating mode NO normally open and NC normally closed
- Valve position visually indicated and tangible
- Bayonet connection audibly engaged with click
- Attractive appearance
- Low power input
- Silent operation
- Available to fit most valve bodies
- Connection cable, pluggable

Electro-thermal actuators in the operating mode normally open and normally closed for heating circuit manifolds and radiator valves.

### DESCRIPTION

NovaDrive NC/NO actuators in the new, attractive appearance used in conjunction with room thermostats, time switches and building automation systems offer an efficient means of controlling temperatures in heating and cooling systems to suit individual requirements.
Thanks to the operating mode NO (normally open) and NC (normally closed) as well as the quick-locking, large surface bayonet connection, the actuators can be used in a wide range of applications in all HVAC systems.

These actuators can help eliminate energy wastage in heating as well as in cooling and offer the ideal solution for energy control in buildings with irregular occupancy levels. Typical installations include apartments, offices, schools, hotels etc. The standard valve position indicators integrated into the actuators control the system functions during the assembly, commissioning and monitoring stages.

### INSTALLATION POSITION

Any.

### OPERATION

An electrical resistance heats an expansion element. Any deviation from the nominal room temperature value causes the actuator to transmit an appropriate stroke movement to the valve.
The thermostat and actuator operate according to the «ON / OFF» principle. The variable, rhythmic opening and closing, depending on the heat demand, also produces an almost continuous control characteristic.
In the without current state, the valve is open with the type NO and closed with the type NC.

### BUILDING CATEGORIES

For installations in the heating and cooling area:

- Apartment blocks, housing estates, multiple dwelling units
- Residential care facilities, hospitals
- Administration and service buildings
- Hotels and restaurants, industrial kitchens
- School buildings and sports facilities
- Commercial and industrial buildings

### SYSTEM/BASIC DIAGRAM

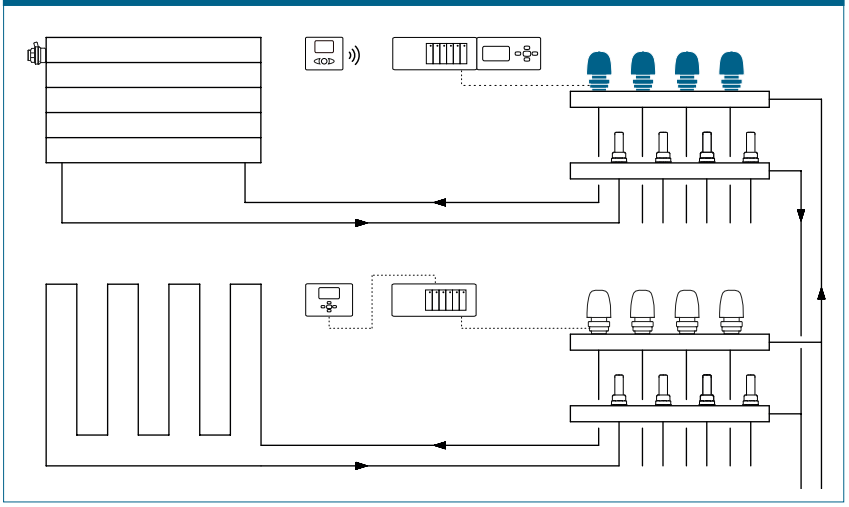

## SPECIFICATION TEXT

See www.taconova.com

## TECHNICAL DATA

**General**

- Versions:
  - Normally closed NC
  - Normally open NO
- Ambient temperature: 0 ... 50° C
- Opening/closing time: approx. 3 min.
- Nominal stroke: 4 mm
- Nominal closing force 90 N
- Protection mode IP 40
- Protection class II

**Electrical specifications**

- Rated voltage (AC or DC): 24 V or 230 V
- Permissible voltage deviation: ±10%
- Operating efficiency: 1.6 W
- Inrush current:
  - 24V: 0.2 A for max. 1 min;
  - 230V: 0.6 A for max. 100 ms
- Recommended fuse protection: 0.35 A time delay, according to DIN 41662
- Connecting cable length 1 m

## APPROVALS / CERTIFICATES

- CE conformity symbol
- The technical data conforms with the respective EN standards

## ACCESSORIES

Various room thermostats and junction modules for wired and wireless applications (see separate data sheets).

## TYPE OVERVIEW

NovaDrive NC | Electro-Thermal Actuator, Function NC (Normally Closed)

| Order no. 230 V | Connection | Suitable for valves of make* |
|---|---|---|
| 257.2854.000 | M30 × 1,0 | Beulco (old type, approx. until march 2005) |
| 257.2855.000 | M30 × 1,5 | TacoSys/Heimeier/Strawa/Empur Messing/Oventrop/Delphistherm/ Emmeti/Schlösser/Beulco/AC-FIX/ Stramax/Roth/IVR |
| 257.2858.000 | M28 × 1,5 | Herz (RV 57) |
| 257.2862.000 | M30 × 1,5 | MNG/Cazzaniga/SBK/Empur-Edelstahl/ SKV-Ventil frontal |
| 257.2864.000 | Adapter | Giacomini |
| 257.2880.000 | M30 × 1,5 | Viega |

| Order no. 24 V | Connection | Suitable for valves of make* |
|---|---|---|
| 257.1854.000 | M30 × 1,0 | Beulco (old type, approx. until march 2005) |
| 257.1855.000 | M30 × 1,5 | TacoSys/Heimeier/Strawa/Empur Messing/Oventrop/Delphistherm/ Emmeti/Schlösser/Beulco/AC-FIX/ Stramax/Roth/IVR |

NovaDrive NO | Electro-Thermal Actuator, Function NC (Normally Open)

| Order no. 230 V | Connection | Suitable for valves of make* |
|---|---|---|
| 257.2554.000 | M30 × 1,0 | Beulco (old type, approx. until march 2005) |
| 257.2555.000 | M30 × 1,5 | TacoSys/Heimeier/Strawa/Empur Messing/Oventrop/Delphistherm/ Emmeti/Schlösser/Beulco/AC-FIX/ Stramax/Roth/IVR |
| 257.2562.000 | M30 × 1,5 | MNG/Cazzaniga/SBK/Empur-Edelstahl/ SKV-Ventil frontal |
| 257.2564.000 | Adapter | Giacomini |

| Order no. 24 V | Connection | Suitable for valves of make* |
|---|---|---|
| 257.1554.000 | M30 × 1,0 | Beulco (old type, approx. until march 2005) |
| 257.1555.000 | M30 × 1,5 | TacoSys/Heimeier/Strawa/Empur Messing/Oventrop/Delphistherm/ Emmeti/Schlösser/Beulco/AC-FIX/ Stramax/Roth/IVR |
| 257.1562.000 | M30 × 1,5 | MNG/Cazzaniga/SBK/Empur-Edelstahl/ SKV-Ventil frontal |

*Further specific customer designs for all types of valve bodies on request. If you are unsure about valve adjustment, please contact customer service.

## ECO-TIP

**SAVE ENERGY AND MONEY!**
To avoid unnecessary hours of operation, the actuator should be switched off via the room thermostat out of the heating period.

## DIMENSIONAL DRAWING

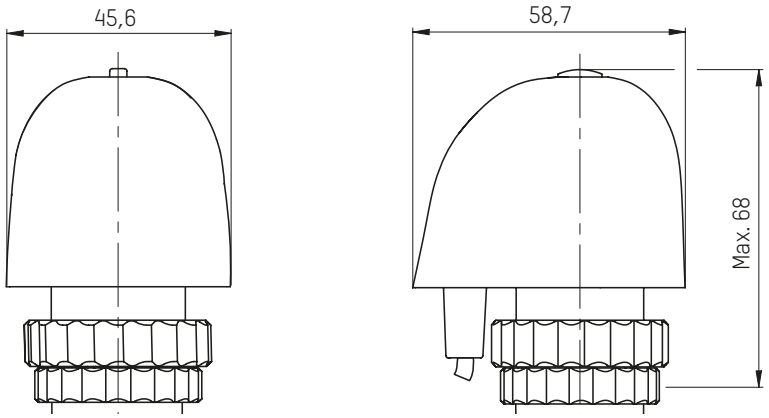


## OPERATING MODES

**Assembled state without current:**

Type NC: Valve closed

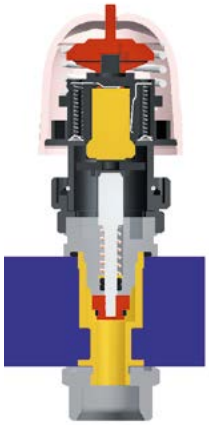

Type NO: Valve open

**Operated state under current:**

Type NC: Valve open

Type NO: Valve closed

## CIRCUIT DIAGRAMS

**Normally Closed (NC)**

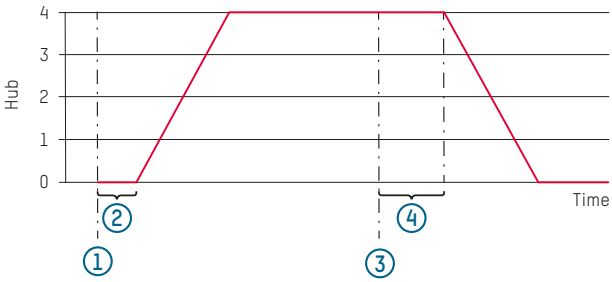


**Normally Open (NO)**

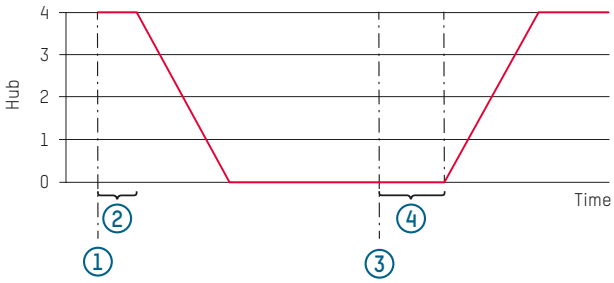


1 Voltage on
2 Dwell time on
3 Voltage off
4 Dwell time off

Subject to modification. 11/2021

## CONTACT AND FURTHER INFORMATION TACONOVA.COM

**Taconova Group AG** | Neunbrunnenstrasse 40 | CH-8050 Zurich | T +41 44 735 55 55 | F +41 44 735 55 02 | group@taconova.com

taconova

# TOPDRIVE

## ACTUATOR

### ADVANTAGES

- Protection against leaking valves
- Protection rating actuator IP 44, CE
- 360° installation
- Compatible to most valve bodies
- Valve position visually indicated and tangible
- Easy installation through bayonet connector

Electro-thermal actuators in the operating mode normally closed for heating circuit manifolds and radiator valves.

### DESCRIPTION

TopDrive actuators in the new, great design used in conjunction with room thermostats, time switches and building automation systems offer an efficient means of controlling temperatures in heating and cooling systems to suit individual requirements.
The normally closed (NC) operating mode, the easily and quickly fitted bayonet connection and the possibility of overhead installation (360° installation) ensure that the TopDrive actuators can be used for versatile applications in heating, ventilation, air conditioning and sanitary systems.
Homes, offices, schools, hotels, etc. are typical examples of properties with high saving potential, since heating and cooling systems are consistently used only as and when required.
Internal visual indication of valve position is standard and serves as a functional control feature during installation, commissioning and monitoring.

### INSTALLATION POSITION

360° installation

### OPERATION

An electric resistance heats an expansion element. Any deviation from the nominal room temperature value triggers the actuator to transmit an appropriate stroke movement to the valve.
The thermostat and actuator operate according to the «ON / OFF» principle. The variable, rhythmic opening and closing, depending on the heat demand, also produces an almost continuous control characteristic.
The valve is normally closed.

### BUILDING CATEGORIES

For installations in the heating and cooling area:

- Apartment blocks, housing estates, multiple dwelling units
- Residential care facilities, hospitals
- Administration and service buildings
- Hotels and restaurants, industrial kitchens
- School buildings and sports facilities
- Commercial and industrial buildings

### SYSTEM/BASIC DIAGRAM

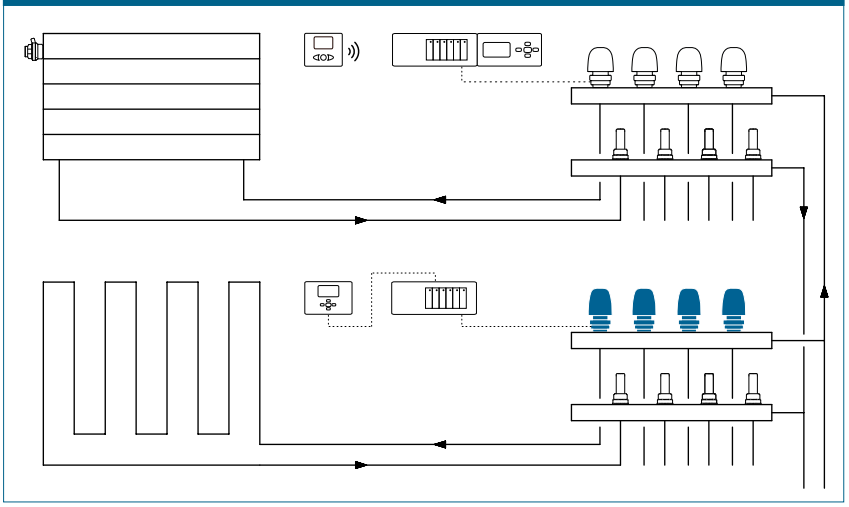

## SPECIFICATION TEXT

See www.taconova.com

## TECHNICAL DATA

**General**

- Type: Normally closed (NC)
- Ambient temperature: 0 ... 60°C
- Opening/closing time: Approx. 3 Min.
- Hub: 4 mm
- Nominal closing force: 100 N ± 7%
- Protection type: IP 44
- Electrical protection class II

**Electric connection data**

- Operating voltage (AC or DC): 24 V or 230 V
- Permissible voltage deviation: ±10%
- Operating efficiency: 1.6 W
- Inrush current:
  - 24 V: 0.2 A for max. 1 min
  - 230 V: 0.6 A for max. 100 ms
- Recommended fuse protection: 0,35 A time delay, according to DIN 41662
- Connecting cable length: 1 m
- Connection cable: 2 × 0.75 mm², PVC

## APPROVALS / CERTIFICATES

- CE conformity symbol
- The technical data conforms with the respective EN standards

## ACCESSORIES

Various room thermostats and junction modules for wired and wireless applications (see separate data sheets).

## ECO-TIP

### SAVE ENERGY AND MONEY!

To avoid unnecessary hours of operation, the actuator should be switched off via the room thermostat out of the heating period.

## TYPE OVERVIEW

TopDrive | Electro-Thermal Actuator, Function NC (Normally Closed)

| Order no. 230 V | Connection | Suitable for valves of make* |
|---|---|---|
| 257.2055.000 | M30 × 1,5 | TacoSys/Heimeier/Strawa/Empur Messing/ Oventrop/Delphistherm/Emmeti/Schlösser/ Beulco/AC-FIX/Stramax/Roth/IVR |
| 257.2058.000 | M28 × 1,5 | Herz (RV 57) |
| 257.2062.000 | M30 × 1,5 | MNG/Cazzaniga/SBK/Empur-Edelstahl/ SKV-Ventil frontal |
| 257.2064.000 | Adapter | Giacomini |

| Order no. 24 V | Connection | Suitable for valves of make* |
|---|---|---|
| 257.1055.000 | M30 × 1,5 | TacoSys/Heimeier/Strawa/Empur Messing/ Oventrop/Delphistherm/Emmeti/Schlösser/ Beulco/AC-FIX/Stramax/Roth/IVR |
| 257.1058.000 | M28 × 1,5 | Herz (RV 57) |
| 257.1062.000 | M30 × 1,5 | MNG/Cazzaniga/SBK/Empur-Edelstahl/ SKV-Ventil frontal |
| 257.1064.000 | Adapter | Giacomini |

* Further specific customer designs for all types of valve bodies on request. If you are unsure about valve adjustment, please contact customer service.

## DIMENSIONAL DRAWING

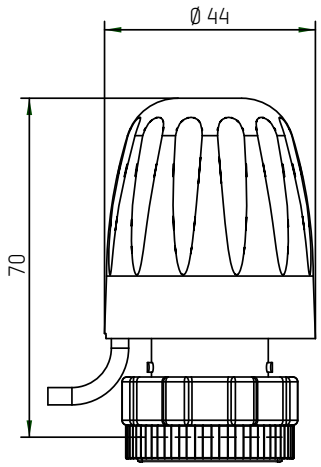

## OPERATING MODES

**Valve closed (no electric current)**

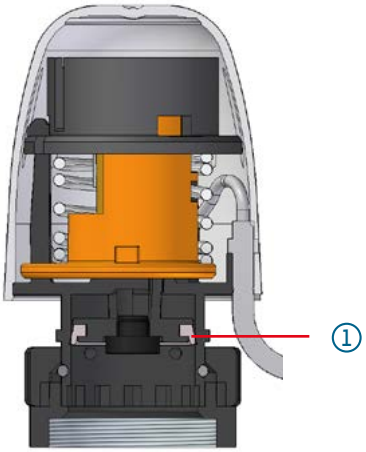


**Valve open (energised)**

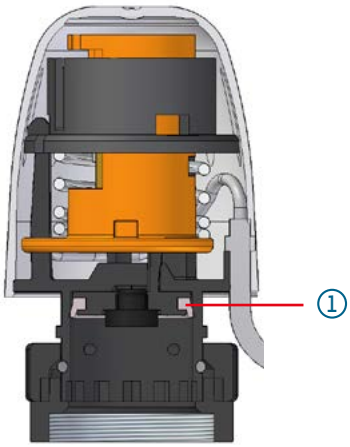


1 Water protection by means of form seal

## BAYONET CONNECTION

Bayonet connection with four large interlocking faces between bayonet sleeve and nut

1 Bayonet sleeve
2 Threaded bayonet-nut
3 Large contact surface
4 Turn until audible click

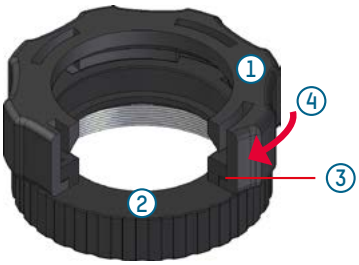


## CIRCUIT DIAGRAMS

1 Voltage on
2 Dwell time on
3 Voltage off
4 Dwell time off

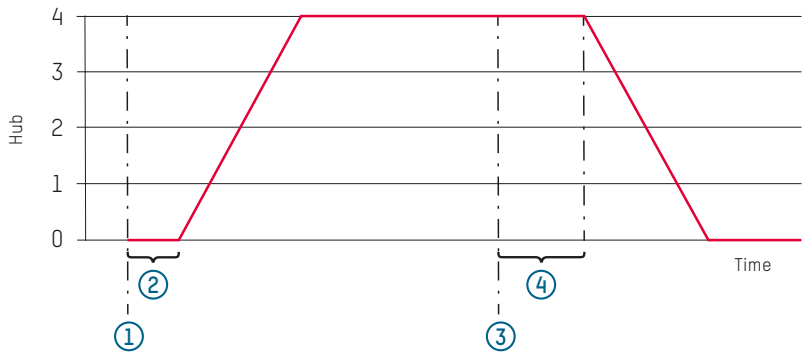


Subject to modification. 11/2020

CONTACT AND FURTHER INFORMATION TACONOVA.COM

Taconova Group AG | Neunbrunnenstrasse 40 | CH-8050 Zurich | T +41 44 735 55 55 | F +41 44 735 55 02 | group@taconova.com

taconova

# TACOSYS

## UNDERFLOOR HEATING MANIFOLD

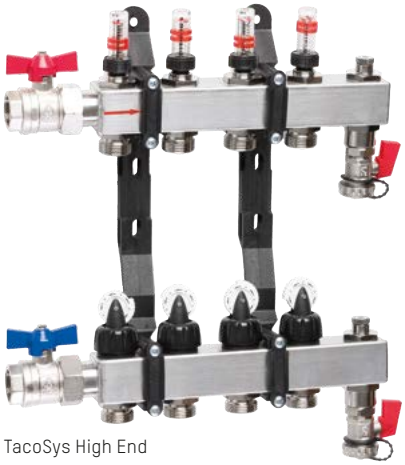

TacoSys High End

TacoSys Connect

### ADVANTAGES

- Lightweight, modern and robust stainless steel manifold bars
- Balancing with the proven TopMeter in supply circuit
- Cone-shaped valve form for fine flow adjustment
- Handwheel positioning with ratchet function for reproducible flow control
- Ventilation with the fully automatic TacoVent Vent air vent
- Glass-fiber reinforced plastic stay for sound-damping assembly
- 100% leakage test

The TacoSys heating circuit manifolds from Taconova ensure the perfect distribution of heat throughout the entire house.

### DESCRIPTION

Thanks to their innovative technology, TacoSys heating circuit manifolds work reliably and according to requirements, and are particularly cost-saving.
The manifold valves are ready to accept Taconova actuators.
The manual control valves enable reproducible, manual flow regulation. Different valve settings result in different flow volumes. They thus guaran-tee individual regulation of the room temperature, precisely tailored to the requirements of your customers.
The vent valves TacoVent Vent caters for fully automatic ventilation of supply and return, thus enhancing operating safety and user convenience.
Whether for use with underfloor heating or radiators, TacoSys offers you high-quality manifold systems that satisfy every customer need.
The underfloor heating manifolds are supplied fully pre-assembled and ready-for-connection, in a robust, non-slip cardboard packing case.
The high-quality stainless steel manifold is available in different versions, making it the ideal solution for hea-ting systems of any type. Designed for between two and twelve heating circuits, it meets every requirement in terms of efficiency and durability.

### SYSTEM/BASIC DIAGRAM

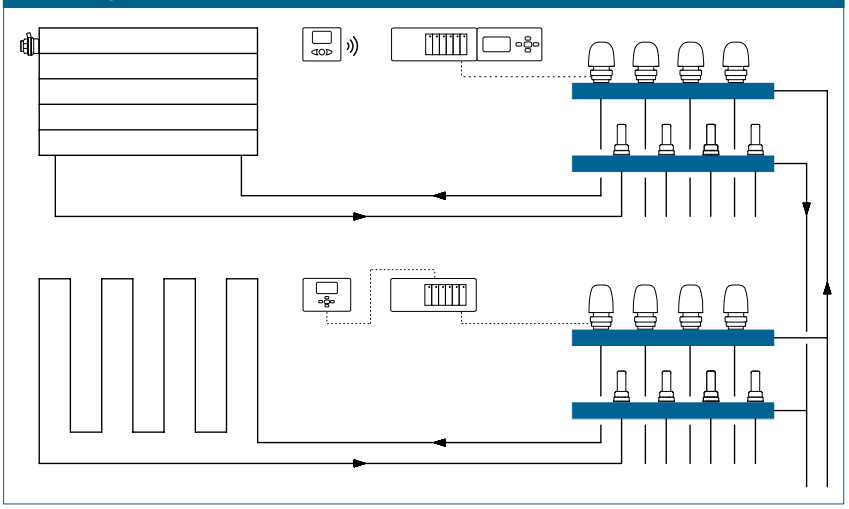

### INSTALLATION POSITION

For riser pipe assembly left, right and overhead.

### OPERATION

Manifold supply and return bars are connected to the heating system.
The heating/cooling circuits can be connected to the two to twelve Eurocone outlets easily using the optional fittings.
The designed flow volume is set for each circuit at the TopMeter.
Handwheel or room thermostats with actuators ensure comfortable conditions in individual rooms.

### BUILDING CATEGORIES

- Apartment blocks, housing estates, multiple dwelling units
- Residential care facilities and hospitals
- Administration and service buildings
- Hotels and restaurants, industrial kitchens
- School buildings and sports facilities
- Commercial and industrial buildings

## SPECIFICATION TEXT

See www.taconova.com

## TECHNICAL DATA

**General**

- Medium temperature: -10 °C to + 70 °C
- Operating pressure $P_{0\ max}$:
  - TacoSys High End: 6 bar
  - TacoSys Connect: 8 bar
- Display accuracy: ±10% of final value
- $k_{VS}$ values and measuring range see „pressure loss diagram"
- Heating circuit connections: ¾" eurocone

**Material**

- Bars: Stainless steel
- Internal parts: Nickel-plated brass, heat-resistant and impact-proof plastics
- Seals: EPDM O-rings
- Securing brackets: Plastic, glass fiber-reinforced

**Fluids**

- Heating water (VDI 2035; SWKI BT 102-01; ÖNORM H 5195–1)
- Water free of chemical additives

## SYSTEM COMPONENTS

TopDrive and NovaDrive electro-thermal actuators, room thermostats and distribution cabinets: See separate datasheets.

## TYPE OVERVIEW

TacoSys | Heating manifolds

| Heating circuits | TacoSys High End* (TopMeter Supply) | | TacoSys Connect** |
|---|---|---|---|
| | 0 – 2.5 l/min | 0 – 5 l/min | |
| 2 | 286.4002.000 | 286.1002.000 | 287.1302.000 |
| 3 | 286.4003.000 | 286.1003.000 | 287.1303.000 |
| 4 | 286.4004.000 | 286.1004.000 | 287.1304.000 |
| 5 | 286.4005.000 | 286.1005.000 | 287.1305.000 |
| 6 | 286.4006.000 | 286.1006.000 | 287.1306.000 |
| 7 | 286.4007.000 | 286.1007.000 | 287.1307.000 |
| 8 | 286.4008.000 | 286.1008.000 | 287.1308.000 |
| 9 | 286.4009.000 | 286.1009.000 | 287.1309.000 |
| 10 | 286.4010.000 | 286.1010.000 | 287.1310.000 |
| 11 | 286.4011.000 | 286.1011.000 | 287.1311.000 |
| 12 | 286.4012.000 | 286.1012.000 | 287.1312.000 |

* With ¾" IT x 1" OT ball valves. Versions without ball valves on request (see price list).
** Without ball valve

## PRESSURE LOSS DIAGRAM

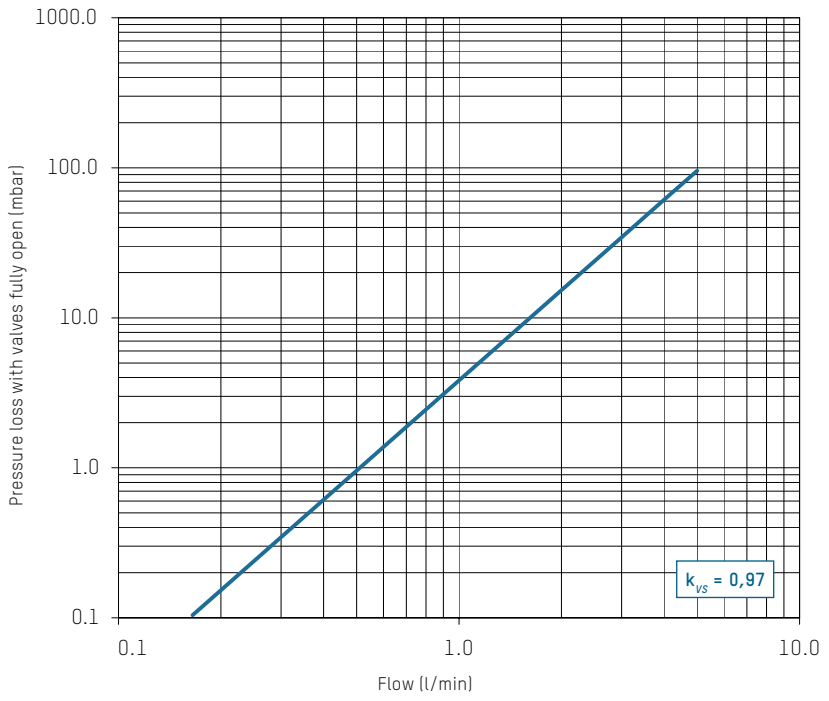


## NOTE

In order to avoid potential flow noise, we recommend that manifolds with 1" ball valves be used if there are eight or more heating circuits and their valves are fully opened (≥ 2.5 l/min).

## NOTE

### Adjusting the TacoSys manifold

The floor heating circuits are adjusted at the TacoSys stainless steel manifold using the advance or return TopMeter.
The adjustment process is carried out with the circulating pump running. All of the valves in the heating circuit must be fully open for adjustment.
It may be necessary to remove the electro-thermal actuators.

1. Start at the TopMeter of the heating circuit with the smallest flow volume
2. Set the calculated volume flow by rotating the black plastic spindle
3. Read off the settings from the red indicator collar in the porthole
4. Repeat the adjustment process for all of the heating circuits
5. Next, check the first values and re-adjust if necessary
6. Once adjustment is complete, note the corre-sponding flow values on the manifold or in the planning documents

## DIMENSIONAL DRAWING

Underfloor heating manifold with TopMeter Supply (in supply circuit)

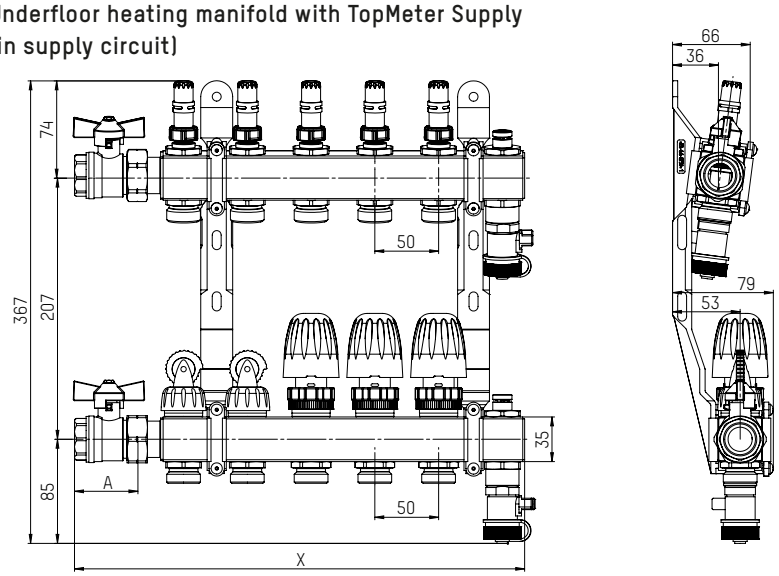


### LENGTH DIMENSIONS

| Heating circuits | Length X with ¾" ball valve |
|---|---|
| 2 | 213 mm |
| 3 | 263 mm |
| 4 | 313 mm |
| 5 | 363 mm |
| 6 | 413 mm |
| 7 | 463 mm |
| 8 | 513 mm |
| 9 | 563 mm |
| 10 | 613 mm |
| 11 | 663 mm |
| 12 | 713 mm |

## ACCESSORIES

### SCREW CONNECTIONS

Two nickel-plated compression fittings, complete, for plastic and multilayer pipes, with molded seal, slotted compression ring and barrier seal.

| Order no. | Dimension | G x mm |
|---|---|---|
| 210.8614.003 | Ø 14 x 2 | ¾" x 14 |
| 210.8616.003 | Ø 16 x 2 | ¾" x 16 |
| 210.8617.003 | Ø 17 x 2 | ¾" x 17 |
| 210.8618.003 | Ø 18 x 2 | ¾" x 18 |
| 210.8620.003 | Ø 20 x 2 | ¾" x 20 |

## SPARE PARTS

### MANUAL REGULATOR

The ratchet feature on the manual control valves enables a reproducible valve setting. The valves are preinstalled in the TacoSys High End and TacoSys Value as standard.

| Order no. |
|---|
| 296.8651.001 |

### BALL VALVE

| Order no. | Dimension | Length | Handle colour |
|---|---|---|---|
| 298.8630.001 | ¾" | 50 mm | red |
| 298.8631.001 | ¾" | 50 mm | blue |
| 298.8628.001 | 1" | 65 mm | red |
| 298.8629.001 | 1" | 65 mm | blue |

### BOILER FILLING AND DRAIN VALVE

The boiler filling and drain valve is only available with red handle

| Order no. | Handle colour |
|---|---|
| 296.8653.001 | red |

### VALVE GROUP WITHOUT MANUAL REGULATOR TOPMETER SUPPLY

| Order no. | Range |
|---|---|
| 298.8609.001 | 0 – 2.5 l/min |
| 298.8606.001 | 0 – 5 l/min |

### VALVE ASSEMBLY WITHOUT MANUAL REGULATOR

| Order no. | Material |
|---|---|
| 298.8613.001 | Plastic |

### AIR VENT GROUP WITHOUT FILLING/DRAINING VALVE

| Order no. |
|---|
| 298.8604.001 |

The pipe sections shown are for illustrative purposes only and are not included in the replacement part packs.

Subject to modification. 11/2020



Taconova Group AG | Neunbrunnenstrasse 40 | CH-8050 Zurich | T +41 44 735 55 55 | F +41 44 735 55 02 | group@taconova.com

taconova

# NOVASTAT / NOVAMASTER EL

## ELECTRONIC ROOM THERMOSTATS AND CONNECTOR MODULES

### ADVANTAGES

- Easy to operate
- Noiseless Triac circuit
- Units for 230 V and 24 V power supply
- Integrated derivative action control or PI control (adjustable)
- Simple wiring through the NovaMaster EL Basic, Logic and SlaveBox terminal modules

Individual control of room temperature.

### DESCRIPTION

Room thermostats in combination with Taconova NovaDrive or TopDrive actuators provide a constant room temperature in closed and dry rooms. The Taconova room thermostat range, classified according to price/performance, offers the correct solution for individual needs.
The basic version **NovaStat EL Basic** for the control of 230 V NC actuators covers the most common application range.
The **NovaStat EL Digital 2** version displays the set and actual values on a digital display.

Individual heat regulation as required by the operator is achieved by means of the programmable digital **NovaStat EL Week** clock thermostat. The time duration of the lowering mode can be set in the week program by means of the integral timer.
The connection of the room thermostats to the terminal module **NovaMaster EL Basic and/or Logic** is simple and uncomplicated.
Further convenient settings are possible by mean of the optional plug-in **NovaMaster EL Timer**.

### INSTALLATION POSITION

The thermostats are mounted in the respective room while the connector modules are mounted close to the manifold.

### OPERATION

By means of an NTC sensor element, the downstream PI or derivative action controller, the room thermostats provide a constant room temperature in combination with actuators.
Switching is via a silent TRIAC element or a floating relay.
Control is by means of the actuator acting on the valve according to the OPEN / CLOSED principle. The PI or derivative action controller integrated into the room thermostat prevents the room temperature from exceeding the desired value set on the room thermostat.

### SYSTEM/BASIC DIAGRAM

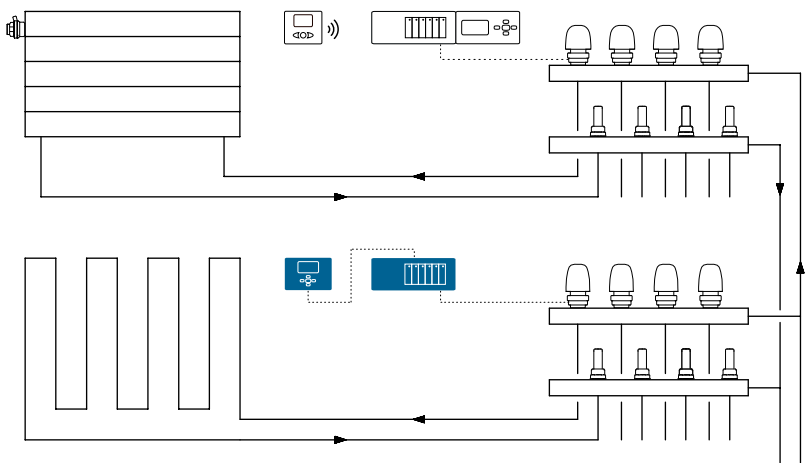

### BUILDING CATEGORIES

For installations in the heating and cooling area:

- Apartment blocks, housing estates, multiple dwelling units
- Residential care facilities, hospitals
- Administration and service buildings
- Hotels and restaurants, industrial kitchens
- School buildings and sports facilities
- Commercial and industrial buildings

# NOVASTAT EL | ELECTRONIC ROOM THERMOSTATS

## 1 NOVASTAT EL BASIC

**Room thermostat for normally closed actuators**

230 V room thermostat for controlling NC actuators for underfloor heating systems. Noiseless switching output (Triac) with direct or indirect connection of actuators. Dial with integral adjustment facility for correction of actual temperature integrated into the dial.

### TECHNICAL DATA

- Order no.: 206.1650.000
- Operating voltage: 230 VAC 50 Hz ± 10 %
- Operating temperature: 0–50 °C (32–122 °F)
- Adjustment range: 5–30 °C (41–86 °F)
- Switching output: TRIAC 230 VAC, NC max. 75 W
- Type of protection: IP 30, Protection class II
- Type of controller: Static derivative action controller
- Differential gap: ±0,5K
- Temperature sensor: NTC 100 K
- Dimensions / color: H80 × W80 × D31 mm / RAL 9010
- Version without handwheel (NovaStat EL Public, 230 V + 24 V) on request

## 2 NOVASTAT EL INWALL

**Room thermostat for normally closed actuators**

Electronic 230 V flush-mounted room thermostat for controlling NC actuators for underfloor heating systems. Relay switching output with direct or indirect connection of actuators. An external timer switch or an additional floor sensor can be fitted. Mode can be set by mean of jumpers.

### TECHNICAL DATA

- Order no.: 206.1654.000
- Operating voltage: 230 VAC 50 Hz ± 10 % / 5 VA
- Operating temperature: 0–50 °C (32–122 °F)
- Adjustment range: 5–35 °C (41–86 °F)
- Switching output: Relais 230 VAC / max. 16 A
- Type of protection: IP 21, Protection class II
- Type of controller : Two point control
- Sensor deviation: ±1 K
- Hysterese: 0.75 °C
- Temperature sensor: NTC 10 K
- Frame dimensions: Standard 65 mm

## 3 NOVASTAT EL DIGITAL 2

**Room thermostat for normally closed and normally open actuators**

Electronic, battery-operated room thermostat for operating NC/NO actuators, for underfloor heating systems with digital display. Floating relay output for direct or indirect connection of 24 V/230 V actuators. With normal, reduced temperature or frost protection settings. Timer function for temperature reduction or increase. Battery charge status indicator on the display. Keypad lock function. Input for external temperature sensor (NTC 10 K).

### TECHNICAL DATA

- Order no.: 206.1660.000
- Operating voltage: 2 × LR6 AAA 1,5 V batteries
- Operating temperature: 0–40 °C (32–104 °F)
- Adjustment range: 5–35 °C in 0,5 °C steps (41–95 °F)
- Switching output: 3 A (250 VAC)
- Type of protection: IP 30, Protection class II
- Type of controller : Static differential action or PWM (proportional)
- Differential gap: ±0,5 K
- Temperature sensor: NTC 10 K, optionally external NTC 10 K
- Dimensions / color: H 83 × W 80 × D 27 mm / RAL 9010

## NOVASTAT EL | ELECTRONIC ROOM THERMOSTATS

### 4 NOVASTAT EL WEEK

**Room thermostat for normally closed and normally open actuators**

Electronic battery operated and programmable room thermostat for controlling NC / NO actuators, for underfloor heating systems with digital display, floating relay output for direct or indirect connection of 24 V / 230 V actuators. Mode switch for normal and lowering mode or automatic timed programs. Can be programmed for weekly and daily programs and for vacations, frost protection and keyboard lock function. Battery supply to avoid data loss in the event of power failure. Battery charge state shown on the display.

### TECHNICAL DATA

- Order no.: 206.1653.000
- Operating voltage: 2 × LR6 AA 1,5 V batteries
- Operating temperature: 0–50 °C (32–122 °F)
- Adjustment range: 5–35 °C (41–95 °F) frost protection 0,5–10 °C (33–50 °F)
- Switching output: Relais floating, NC / NO max. 8 A
- Type of protection: IP 30, Protection class II
- Type of controller: PI controller
- Adjustment bandwidth: 2 °K of proportional band
- Adjustment speed: 7,5 cycles / hour (8 min cycle)
- Temperature sensor: NTC 100 K
- Dimensions / color: H 86 × B 125 × T 32 mm / RAL 9010

## NOVAMASTER EL | ELECTRONIC CONNECTOR MODULES

### 1 NOVAMASTER EL BASIC

**Wiring module for connecting electrothermal actuators and room thermostats with terminals marked by symbols**

Modular design enables expansion by SlaveBox to provide for further connections. Direct wall mounting or mounting on DIN rail. Control of 24 V actuators by means of optional transformer. Operating status output shown by LEDs

### TECHNICAL DATA

- Order no.: 258.9310.000
- Operating voltage: 230 VAC 50 Hz ± 10 % / 24 VAC with transformer
- Operating temperature: 0–50 °C (32–122 °F)
- Number of zones: 6 (max. 4 drives / zones)
- Max. number of drives: 24 × 230 VAC or 18 × 24 VAC
- Number of drives / zones: Max. 4 drives / zones
- Time control line: None
- Type of protection: Protection class II IP 30
- Dimensions / color: H88 × B225 × T58 mm / RAL 9010

### 2 NOVAMASTER EL LOGIC

**Wiring module for connecting electroterminal actuators and room thermostats with terminals marked by symbols.**

Modular design enables expansion by NovaMaster EL Timer to provide for further control functions. Switching output for time control of room thermostat.

Two floating switching outputs as a control contact for pump logic. Direct wall mounting or mounting on DIN rail. Operating status indicated by LEDs.

### TECHNICAL DATA

- Order no.: 258.9311.000
- Operating voltage: 230 VAC 50 Hz ± 10 %
- Operating temperature: 0–50 °C (32–122 °F)
- Number of zones: 6 (max. 4 drives / zones)
- Max. number of drives: 24 × 230 VAC
- Time control line: Zones A and B present
- Switching output: 2 x relays, floating, max. 8 A
- Type of protection: Protection class II IP 30
- Dimensions / color: H88 × B225 × T58 mm / RAL 9010

### 3 NOVAMASTER EL SLAVEBOX

**An expansion module for wiring electrothermal actuators and room thermostats with terminals marked by symbols**

Plug-in expansion to NovaMaster EL Basic for further connection possibilities. Direct wall mounting or mounting on DIN rail. Control of 24 V actuators by means of optional transformer. Operating status indicated by LEDs.

#### TECHNICAL DATA

- Order no.: 258.9313.000
- Operating voltage: 24 VAC with transformer / 230 VAC 50 Hz ± 10 %
- Operating temperature: 0–50 °C (32–122 °F)
- Number of zones: 4 (max. 4 drives / zones)
- Max. number of drives: Σ NovaMaster EL Basic + SlaveBox = 24 × 230 VAC oder 18 × 24 VAC
- Time control line: None
- Type of protection: Protection class II IP 30
- Dimensions / color: H88 × W160 × D58 mm / RAL 9010

### 4 NOVAMASTER EL TIMER

**NovaMaster EL Timer expansion module for connection to NovaMaster EL Logic**

Programmable timer function for two time group A and B. Integrated application program of which nine are fixed and two are user programmable. Intelligent processor. Digital display for program, time and function display. Direct wall mounting or mounting on DIN rail.

#### TECHNICAL DATA

- Order no.: 258.9315.000
- Operating voltage: 230 VAC 50 Hz ± 10 %
- Operating temperature: 0–50 °C (32–122 °F)
- Number of zones: 12 Zones, controllable
- Time control line: Zones A and B present
- Operating modes: Automatic; convenience; lowering
- Keyboard lock: Present
- Type of protection: Protection class II IP 30
- Dimensions / color: H88 × W160 × D62 mm / RAL 9010

### 5 TRANSFORMATOR

**Transformer for connection to NovaMaster EL Basic or SB**

Enables 24 V actuators to be connected to the respective terminal module.

#### TECHNICAL DATA

- Order no.: 258.9316.500
- Operating voltage: 230 VAC 50 Hz ± 10%
- Operating temperature: 0–50 °C (32–122 °F)
- Output voltage: 24 VAC max. 60 W
- Type of protection: Protection class II IP 30
- Dimensions / color: H83 × W110 × D61 mm / RAL 9010

Subject to modification. 01/2022

CONTACT AND FURTHER INFORMATION TACONOVA.COM

Taconova Group AG | Neunbrunnenstrasse 40 | CH-8050 Zurich | T +41 44 735 55 55 | F +41 44 735 55 02 | group@taconova.com

taconova

# NOVASTAT / NOVAMASTER RF

## WIRELESS ROOM THERMOSTATS AND CONNECTOR MODULES

### ADVANTAGES

- No wiring effort required
- Optimum positioning within the room
- Own signal encryption for unique assignment of room thermostat
- Simple connection of the actuators to the wiring module
- For actuators normally closed (NC) and normally open (NO)
- Intelligent processor

Individual control of room temperature.

### DESCRIPTION

Room thermostats in combination with Taconova NovaDrive or TopDrive actuators provide a constant room temperature in enclosed and dry rooms.
The room thermostat range, classified according to price/performance, offers the correct solution for individual needs.
The basic version **NovaStat RF Basic** covers the most common range of applications.
The **NovaStat RF Digital** and **NovaStat RF Week** versions display the set and actual values on a digital display.
Individual regulation of temperature in individual rooms as required by the operator is achieved by means of the programmable digital **NovaStat RF Week** clock thermostat or the **NovaMaster RF Logic**. The time duration of the lowering mode can be set in the week program by means of the integral timer.
The individual room thermostats can be assigned to the **NovaMaster RF Logic** receiver module or the **NovaMaster RF Mini** single-channel receiver simply and without complicated wiring.
The connection options for actuators can be expanded with the optional pluggable **NovaMaster RF SlaveBox** module.

### SYSTEM/BASIC DIAGRAM

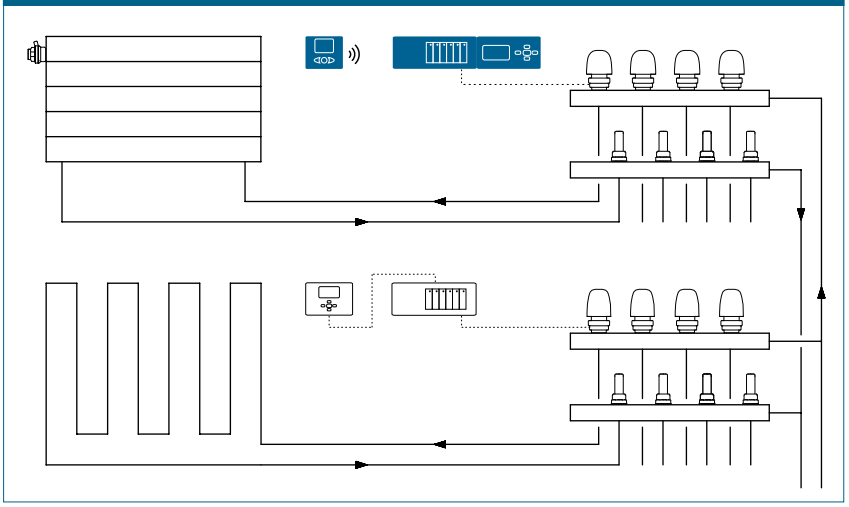

### INSTALLATION POSITION

The thermostats are mounted in the respective room while the connector modules are mounted close to the manifold.

### OPERATION

By mean of an NTC sensor element, the downstream PI or derivative action controller, the room thermostats provide a constant room temperature in combination with actuators.
The control signal is transmitted to the central receiver by radio (868 MHz).
Control is by means of the actuator acting on the valve according to the OPEN/CLOSED principle.
The PI or derivative action controller integrated into the room thermostat prevents the room temperature exceeding the desired value set on the room thermostat.

### BUILDING CATEGORIES

For installations in the heating and cooling area:

- Apartment blocks, housing estates, multiple dwelling units
- Residential care facilities, hospitals
- Administration and service buildings
- Hotels and restaurants, industrial kitchens
- School buildings and sports facilities
- Commercial and industrial buildings

# NOVASTAT RF | WIRELESS ROOM THERMOSTATS

## 1 NOVASTAT RF BASIC

**Electronic wireless room thermostat for indirect controlling of NC/NO actuators in underfloor heating systems**

Desired values transmitted by radio signal (868 MHz). Each thermostat has its own signal encryption for unique assignment. Correction of the actual temperature is integrated into the adjustment dial.

### TECHNICAL DATA

- Order no.: 206.1656.000
- Operating voltage: 2 batteries LRG AAA 1,5 V
- Operating temperature: 0–50 °C (32–122 °F)
- Adjustment range: 5–30 °C (41–86 °F)
- Radio frequency: 868 MHz, < 10 mW
- Certification: CE.EN 300220-1, EN 301489-1
- Type of protection: Protection class II IP 30
- Control behavior: Proportional band 2 ° K (15 min.)
- Temperature sensor: NTC 100 K
- Dimensions: H80 × W80 × D31 mm
- Color: RAL 9010

## 2 NOVASTAT RF DIGITAL

**Electronic wireless room thermostat with digital display for indirect controlling of NC/NO actuators in underfloor heating systems**

Desired values transmitted by radio signal (868 MHz). Each thermostat has its own signal encryption for unique assignment. Mode switch for normal and lowering modes. Further userdefined settings possible in system parameter menu.

### TECHNICAL DATA

- Order no.: 206.1657.000
- Operating voltage: 2 batteries LRG AAA 1,5 V
- Operating temperature: 0–50 °C (32–122 °F)
- Adjustment range: 5–30 °C (41–86 °F)
- Radio frequency: 868 MHz, < 10 mW
- Certification: CE.EN 300220-1, EN 301489-1
- Type of protection: Protection class II IP 30
- Control behavior: PI controller or static derivative action controller, adjustable
- Temperature sensor: NTC 100 K
- Dimensions: H80 × W80 × D31 mm
- Color: RAL 9010

## 3 NOVASTAT RF WEEK

**Electronic wireless room thermostat with digital display for indirect controlling of NC/NO actuators in underfloor heating systems.**

Desired values transmitted by radio signal (868 MHz). Each thermostat has its own signal encryption for unique assignment. Mode switch for normal and lowering mode or automatic timed programs. Can be programmed for weekly and daily programs and for vacations, frost protection and keyboard lock function. Further user-defined settings possible in system parameter menu.

### TECHNICAL DATA

- Order no.: 206.1658.000
- Operating voltage: 3 batteries LR6 AA 1,5 V
- Operating temperature: 0–50 °C (32–122 °F)
- Adjustment range: 5–35 °C (41–95 °F) Frost protection 0,5–10 °C (33–50 °F)
- Radio frequency: 868 MHz, < 10 mW
- Certification: CE.EN 300220-1, EN 301489-1
- Type of protection: Protection class II IP 30
- Type of controller: PI controller, cycle 15 min.
- Adjustment bandwidth: 2 ° K of proportional band
- Adjustment speed: 7,5 Cycles / h (8 min cycle)
- Temperature sensor: NTC 100 K
- Dimensions: H86 × W125 × D32 mm
- Color: RAL 9010

## NOVAMASTER RF | RADIO RECEIVER

### NOVAMASTER RF MINI

**Single-channel radio receiver for controlling NC / NO actuators in underfloor heating systems**

Desired values transmitted by radio signal (868 MHz). Combinable with room thermostats NovaStat RF Basic, NovaStat RF Digital and NovaStat RF Week

### TECHNICAL DATA

- Order no.: 206.1659.000
- Operating voltages: 230 VAC / NC / NO / 50 Hz ± 10 %
- Operating temperature: 0–50 °C (32–122 °F)
- Switching output: Receiver relay 12 A 250 VAC max.
- Quantity of actuators: Max. 2 actuators (parallel)
- Radio frequency: 868 MHz, < 10 mW
- Certification: CE.EN 300220-1, EN 301489-1
- Type of protection: Protection class II IP 30
- Dimensions: H170 × W28 × D14 mm
- Color: RAL 9010

## NOVAMASTER RF | RADIO RECEIVER WIRING MODULE

1

2

### 1 NOVAMASTER RF LOGIC

**Wiring module in combination with receiver unit Novamaster RF Logic for the wiring of electrothermal actuators and assignment of the individual wireless room thermostats**

Expansion possible with Novamaster RF SlaveBox to provide further connection options. Direct wall mounting or mounting on DIN rail. Control of 230 V NC/NO actuators. Operating status indicated by LEDs. 2 separate, floating switching outputs on Novamaster RF Logic wiring module for actuating pumps. Programmable timer function for zone concerned. Integrated user programs, 9 fixed and 12 freely programmable for each individual zone. Digital display for program, time and function.

### TECHNICAL DATA

- Order no.: 258.9317.000
- Operating voltage: 230 VAC 50 Hz ± 10 %
- Operating temperature: 0–50 °C (32–122 °F)
- Radio frequency (Timer): 868 MHz, < 10 mW
- Certification: CE.EN 300220-1, EN 301489-1
- Number of zones: 6 (max. 4 drives / zone)
- Max. quantity of actuators: 24 × 230 VAC
- Quantity of actuators / Zone: max. 4 drives / zone
- Type of controller: PI controller proportional bandwidth 2° K/1, 2° K
- Type of protection: Protection class II IP 30
- Switching outputs: 2 × separate, floating for pump switching max. 8 A
- Dimensions: H88 × W370 × D58 mm
- Color: RAL 9010

### 2 NOVAMASTER RF SLAVEBOX

**Expansion module for the NovaMaster RF Logic module for the extended wiring of electrothermal actuators**

Assignment of the room thermostats takes place via the Novamaster EL Timer. Pluggable expansion and direct wall mounting or mounting on DIN rail. Control of 230 V NC/NO actuators. Operating status indicated by LEDs.

### TECHNICAL DATA

- Order no.: 258.9319.000
- Operating voltage: 230 VAC 50 Hz ± 10 %
- Operating temperature: 0–50 °C (32–122 °F)
- Number of zones: 4 (max. 4 drives / zone)
- Max. number of actuators:
  Σ Novamaster RF Logic + Novamaster RF SlaveBox = 24 × 230 VAC
- Type of protection: Protection class II IP 30
- Dimensions : H88 × W160 × D58 mm
- Color: RAL 9010

Subject to modification. 11/2019

CONTACT AND FURTHER INFORMATION TACONOVA.COM

Taconova Group AG | Neunbrunnenstrasse 40 | CH-8050 Zurich | T +41 44 735 55 55 | F +41 44 735 55 02 | group@taconova.com

taconova

# NOVAMIX COMPACT 50 TMV2

## THERMOSTATIC MIXING VALVE

Limits and maintains constant levels of mixing temperatures in systems.

### ADVANTAGES

- Constant temperature of the water at the outlet
- Automatic mixing function without auxiliary power
- Infinite regulation of the mixed water temperature in the range from 30 – 70 °C
- Anti-scalding device
- Pipes and draw-off fittings are protected against calcification and corrosion
- Non-stick coating on valve housing to prevent scale build-up
- No maintenance
- Back-flow preventers (check-valves) built into cold and hot water connections
- Build-Cert, TMV-2, ACS approval for potable water

### DESCRIPTION

The autonomous thermostatic mixing valve NovaMix Compact 50 ensures a constant mixed water temperature at the outlet. This gives permanent protection against scalding, even with high storage tank temperatures.
The mixing valve can be used in sanitary applications in both public and private areas. Due to its attractive design, it is also suitable for visible installation directly beneath the wash-basin.
Temperature can be regulated up to 50 °C, thermal disinfection can be carried out.

Backflow preventers are already installed ensuring optimum hydraulic functionality.

### INSTALLATION POSITION

Any.

### OPERATION

A thermostatic cartridge and a return spring ensure the constant blend temperature at the outlet.
Thanks to the design of the mixing valve, the thermostatic cartridge can be easily replaced in the installed valve if the performance decreases, which occurs due to normal wear and tear.

In case of cold water failure, the hot water supply shuts off automatically and hermetically. This ensures full protection against scalding.

### BUILDING CATEGORIES

For pipe installations in drinking water and heating area:

- Apartment blocks, housing estates, multiple dwelling units
- Residential care facilities, hospitals
- Administration and service buildings
- Hotels and restaurants, industrial kitchens
- School buildings and sports facilities
- Commercial and industrial buildings

### SYSTEM/BASIC DIAGRAM

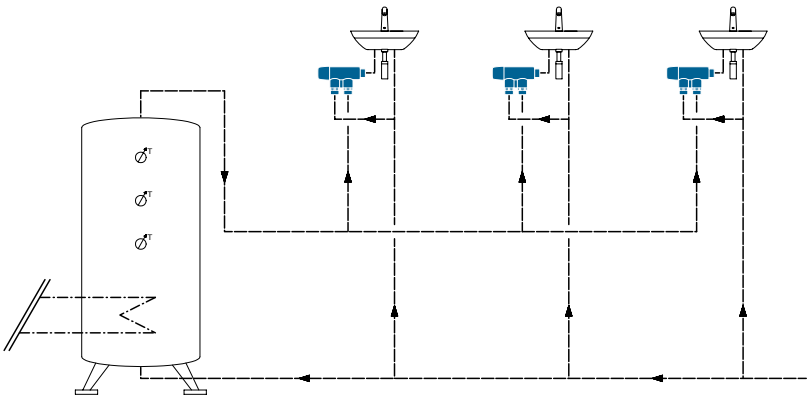

## SPECIFICATION TEXT

See www.taconova.com

## TECHNICAL DATA

**General**

- $k_{VS}$ values and dimensions as per the relevant tables
- Max. operating temperature $T_{0\,max}$: 90 °C
- Max. operating pressure $P_{0\,max}$: 10 bar
- Min. operating pressure $P_{B\,min}$: 0,5 bar
- Adjustable temp. range: 30 – 50 °C
- Mix temperature stability: max. 3 K (for hot water temp. change 15 K)
- Shut-off function in event of cold water failure
- Noise class 2
- Installation position: any

**Material**

- Housing: brass (DZR), nickel-plated
- Internal parts: Stainless steel, brass, high-quality plastic
- Seals: EPDM
- Housing with anti-lime scale coating

**Flow media**

- Heating water (VDI 2035; SWKI BT 102-01; ÖNORM H 5195–1)
- Potable water (DIN 1988-200)

## APPROVALS

- Build-Cert, TMV-2, ACS

## NOTE

The brochure „NOVAMIX ONE RANGE - NEW APPLICATIONS“ contains additional information on the various applications of Taconova mixing valves.

## TYPE PROGRAM

NovaMix Compact 50 TMV2 | Thermostatic mixing valve
Temperature range 30 – 70 °C

| Item no. | DN | G | E (l/min) | $k_{VS}$ |
|---|---|---|---|---|
| 252.6073.107 | 15 | ½" | 23,7 | 1,42 |

E = Extracted outlet quantity at Δp = 1 bar

## DIMENSIONAL DRAWING

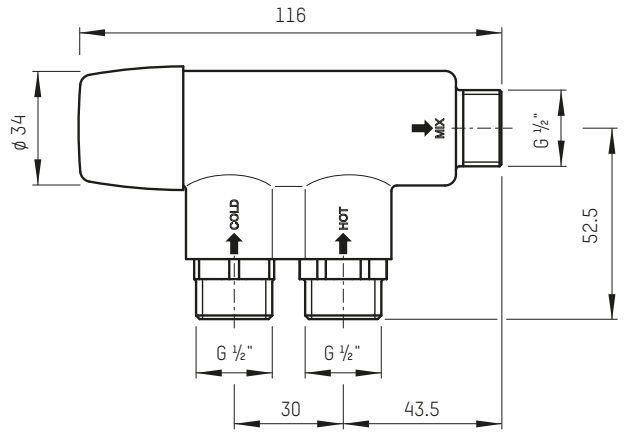


## PRESSURE LOSS DIAGRAM

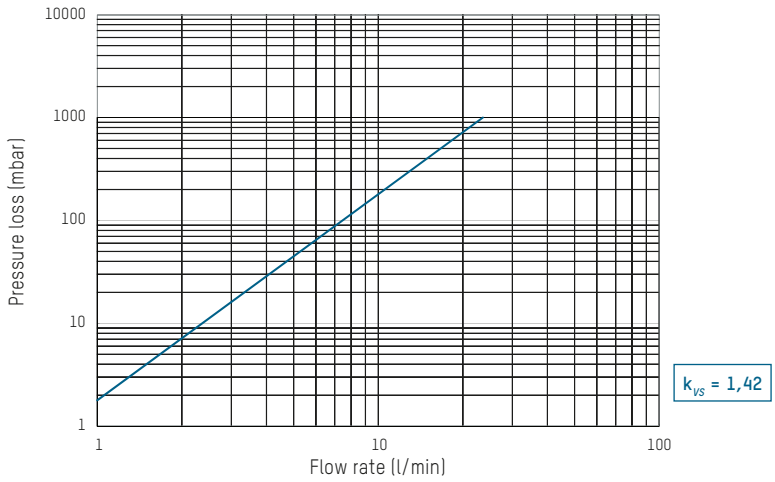


## ACCESSORIES

## ADAPTER FOR FLAT SEALING FITTINGS

| Item no. |
|---|
| 296.5223.004 |

## CONNECTIONS

Compression fitting joint with nut, clamping ring and supporting sleeve

| Item no. | G × mm | Version for |
|---|---|---|
| 210.3222.000 | ½" × 10 | Copper pipe 10/1 |
| 210.3223.000 | ½" × 12 | Copper pipe 12/1 |
| 210.3225.000 | ½" × 15 | Copper pipe 15/1 |

Subject to modification. 10/2018

CONTACT AND FURTHER INFORMATION TACONOVA.COM

Taconova Group AG | Neunbrunnenstrasse 40 | CH-8050 Zurich | T +41 44 735 55 55 | F +41 44 735 55 02 | group@taconova.com

taconova

# NOVAMIX STANDARD

## THERMOSTATIC MIXING VALVE

W270

## ADVANTAGES

- Constant temperature of the water at the outlet
- Automatic mixing function without the need for auxiliary power
- Infinite regulation of the nominal temperature in 2 ranges: 20 – 40 °C / 30 – 70 °C
- Protection against scalding; the NovaMix Standard 70 FS model closes tightly
- Special design with anti-scalding device
- Can be used in panel heating systems and for loading storage tanks by means of solid-fuel boilers

Maintaining constant mixing temperatures and limiting temperatures in hot water systems

### DESCRIPTION

The automatic thermostatic mixing valve NovaMix Standard ensures a constant temperature of the mixed water at the outlet when used as the central mixing device.
The NovaMix Standard is mainly used in sanitary applications as a regulating device for reducing the temperature of the water coming out of hot water storage tanks. It can also be used in numerous other applications requiring a constant mixing temperature, For example as a mixing unit for constant water mixing temperatures in panel heating systems and for loading storage tanks by means of solid-fuel boilers.

### INSTALLATION POSITION

Any.

### OPERATION

**Standard design:**
A thermostatic cartridge and a return spring ensure the constant blend temperature at the outlet.
Thanks to the design of the mixing valve, the thermostatic cartridge can be easily replaced in the installed valve if the performance decreases, which occurs due to normal wear and tear.

**Special design NovaMix Standard 70 / 40 FS (Fail Safe):**
In the case of cold water failure, the hot water supply shuts off automatically and hermetically.

### BUILDING CATEGORIES

For pipe installations in drinking water and heating area:

- Apartment blocks, housing estates, multiple dwelling units
- Residential care facilities, hospitals
- Administration and service buildings
- Hotels and restaurants, industrial kitchens
- School buildings and sports facilities
- Commercial and industrial buildings

## SYSTEM/BASIC DIAGRAM

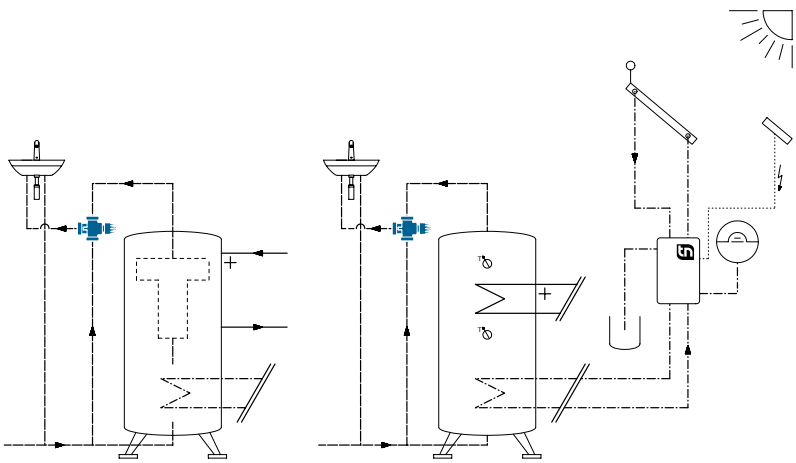

# NOVAMIX STANDARD | THERMOSTATIC MIXING VALVE

## SPECIFICATION TEXT

See www.taconova.com

## TECHNICAL DATA

**General**

- Operating temperature $T_{0\,max}$, adjustable temperature ranges, $k_{VS}$ values and dimensions as per the relevant tables
- Operating temperature $T_{0\,max}$ with check-valve (CV): 90 °C
- Max. operating pressure $P_{0\,max}$: 10 bar
- Min. operating pressure $P_{0\,min}$: 0,5 bar
- Working pressure (dynamic): max. 5 bar
- Constant inlet pressure differential: max. 2 bar
- Temperature stability for mixing: max. 3 K (for change in hot water temperature: 15 K)
- Locking function in the event of failure of the cold water supply
- Noise class 2
- Installation position: can be installed in any position

**Material**

- Housing and inner parts: brass (resistant to dezincification)
- Seals: EPDM
- Housing with lime resistant-coating

**Fluids**

- Heating water (VDI 2035; SWKI BT 102-01; ÖNORM H 5195–1)
- Potable water (DIN 1988-200)

**Special application**

- Diverting function possible (inflow via a mixing gate)

## APPROVALS / CERTIFICATES

- ACS, KTW, W270

## DIMENSIONAL DRAWING

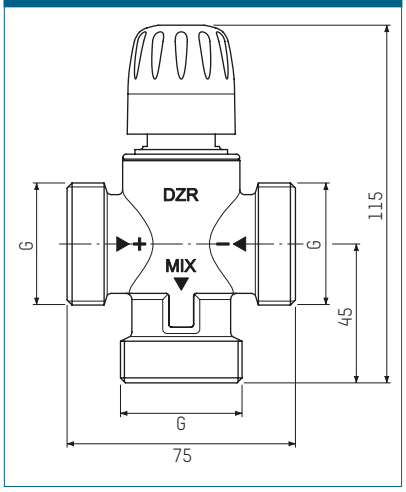


## TYPE OVERVIEW

NovaMix Standard 70 / 40 | Thermostatic mixing valve for storage water heating unit

| Order no. | DN | G | Control range | $T_{0\,max}$ | V (l/min) | $k_{VS}^1$ | $k_{VS}^2$ |
|---|---|---|---|---|---|---|---|
| 252.6003.104 | 20 | 1" | 30 – 70 °C | 100 °C | 39 | 1,9 | 1,65 |
| 252.6003.330* | 20 | 1" | 30 – 70 °C | 100 °C | 39 | 1,9 | 1,65 |
| 252.6004.104 | 25 | 1 ¼" | 30 – 70 °C | 100 °C | 53 | 2,6 | 2,25 |
| 252.6023.104** | 20 | 1" | 20 – 40 °C | 80 °C | 39 | 1,9 | 1,65 |
| 252.6024.104** | 25 | 1 ¼" | 20 – 40 °C | 80 °C | 53 | 2,6 | 2,25 |

* With integrated check valve

** On request (successor versions see NovaMix Value 20 - 50 °C)

NovaMix Standard 70 FR (Fast Response) | Thermostatic mixing valve for continuous flow water heating

| Order no. | DN | G | Control range | $T_{0\,max}$ | V (l/min) | $k_{VS}^1$ | $k_{VS}^2$ |
|---|---|---|---|---|---|---|---|
| 252.6043.104 | 20 | 1" | 30 – 70 °C | 100 °C | 22 | 1,1 | 0,7 |

NovaMix Standard 70 FS (Fail Safe) | Thermostatic mixing valve | Special design with anti-scalding protection in the event of failure of the cold water supply for storage water heating units

| Order no. | DN | G | Control range | $T_{0\,max}$ | V (l/min) | $k_{VS}^1$ | $k_{VS}^2$ |
|---|---|---|---|---|---|---|---|
| 252.6003.107 | 20 | 1" | 30 – 70 °C | 100 °C | 39 | 1,9 | 1,65 |
| 252.6004.107 | 25 | 1 ¼" | 30 – 70 °C | 100 °C | 53 | 2,6 | 2,25 |

V = Volume obtained at Δp = 1,5 bar  $k_{VS}^1$ = without check-valve  $k_{VS}^2$ = with check-valve

## NOTE

The brochure „NOVAMIX ONE RANGE - NEW APPLICATIONS“ contains additional information on the various applications of Taconova mixing valves.

## PRESSURE LOSS DIAGRAM

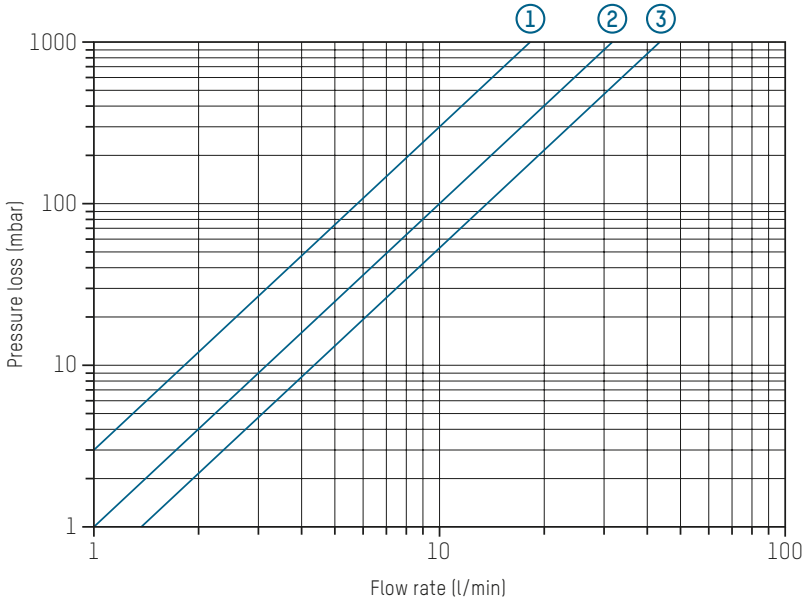


1 252.6043.104
2 252.6003.104 | 252.6023.104 | 252.6003.107
3 252.6004.104 | 252.6024.104 | 252.6004.107

## ACCESSORIES

### INSULATION BOX

| Order no. | DN |
|---|---|
| 296.2326.000 | 20 |
| 296.2327.000 | 25 |

### CHECK-VALVE

Operating temperature $T_{0\,max}$: 95 °C, operating pressure $P_{0\,max}$: 10 bar
For insertion in the screw connection at the cold and hot water inlets.

| Order no. | Fits to order no. |
|---|---|
| 296.5203.003 | 252.6003.XXX \| 252.6023.104 \| 252.6043.104 |
| 296.5204.003 | 252.6004.XXX \| 252.6024.104 |

### SCREW CONNECTIONS

You will find various suitable screw connections in our „Range of Products“ catalog and our „Price List“.

## SPARE PARTS

### THERMAL ELEMENT WITH REGULATING PISTON

| Order no. | Description |
|---|---|
| 298.5263.000 | 20 – 40 °C for NovaMix Standard 40 |
| 298.5262.000 | 30 – 70 °C for NovaMix Standard 70/70 FR |
| 298.5264.109 | 30 – 70 °C for NovaMix Standard 70 FS |

Subject to modification. 01/2020

CONTACT AND FURTHER INFORMATION TACONOVA.COM
Taconova Group AG | Neunbrunnenstrasse 40 | CH-8050 Zurich | T +41 44 735 55 55 | F +41 44 735 55 02 | group@taconova.com

taconova

# NOVAMIX VALUE

## THERMOSTATIC MIXING VALVE

W270

Maintaining constant mix temperatures and limiting temperatures in hot water systems

### ADVANTAGES

- Constant temperature of the water at the outlet
- Automatic mixing function without the need for auxiliary power and infinite regulation of the mixed water temperature
- High regulation precision
- Protection against scalding
- High $k_{VS}$ values
- Valve housing with non-stick coating to protect against lime scale deposits
- Mechanism to prevent adjustment of the nominal value
- No additional seals required when using the check valves (CV)
- Can be used in panel heating systems and for loading storage tanks by means of solid-fuel boilers

### DESCRIPTION

The automatic thermostatic mixing valve NovaMix Value ensures a constant temperature of the mixed water at the outlet when used as the central mixing device.
This prevents scalding at the outlet, even with high storage tank temperatures.
Wide area of possible application thanks to three different valve dimensions. Available with ¾" (DN15), 1" (DN20) and 1¼" (DN25) connection.
Special valve seals at the regulator piston keep undesired admixtures to a minimum*, resulting in maximum utilisation of the storage tank temperature.

The NovaMix Value is mainly used in sanitary applications as a regulating device for reducing the temperature of the water coming out of hot water storage tanks. For example as a mixing unit for constant water mixing temperatures in panel heating systems and for loading storage tanks by means of solid-fuel boilers.

* If the hot water lies 3K below the set mixing temperature, the cold water leak rate = 0. Otherwise, the maximum value for admixtures is 3K.

### INSTALLATION POSITION

Any.

### OPERATION

The mixing valve is supplied with hot water from the storage tank and cold water from the mains network.
The temperature of the mixed water is detected by the thermostatic expansion element. If the mixed water temperature diverges from the target value, the thermostatic expansion element moves the regulator piston, thus regulating the hot and cold water intake quantity accordingly, until the mixed water temperature corresponds to the target value.

### BUILDING CATEGORIES

For pipe installations in drinking water and heating area:

- Apartment blocks, housing estates, multiple dwelling units
- Residential care facilities, hospitals
- Administration and service buildings
- Hotels and restaurants, industrial kitchens
- School buildings and sports facilities
- Commercial and industrial buildings

### SYSTEM/BASIC DIAGRAM

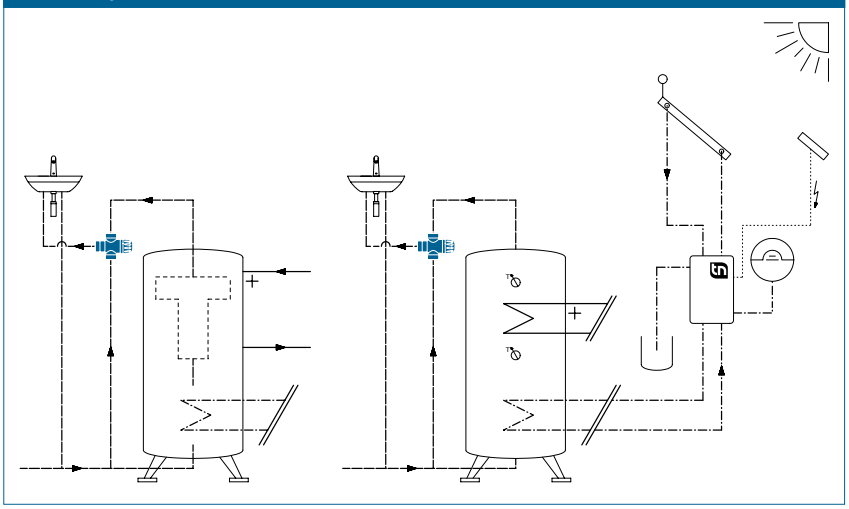

## SPECIFICATION TEXT

See www.taconova.com

## TECHNICAL DATA

**General**

- Adjustable temperature ranges:
  - 20 – 50 °C
  - 45 – 65 °C
  - 35 – 70 °C
- $k_{vs}$ values and dimensions as per the relevant tables
- Operating temperature $T_{0\,max}$: 100 °C
- Operating temperature $T_{0\,max}$ with check-valve (CV): 90 °C
- Max. operating pressure $P_{0\,max}$: 10 bar
- Min. operating pressure $P_{0\,min}$: 0,5 bar
- Working pressure (dynamic): max. 5 bar
- Constant inlet pressure differential: max. 2 bar
- Temperature stability for mixing: max. 3 K (for change in hot water temperature: 15 K)
- Locking function in the event of failure of the cold water supply
- Noise class 2
- Installation position: can be installed in any position

**Material**

- Housing: brass (resistant to dezincification)
- Internal parts: High-quality plastic
- Seals: EPDM
- Housing with lime resistant-coating

**Fluids**

- Heating water (VDI 2035; SWKI BT 102-01; ÖNORM H 5195–1)
- Potable water (DIN 1988-200)

**Special application**

- Diverting function possible (inflow via a mixing gate)
- DN 15 and DN 20 are also suitable for flow water heating units

## APPROVALS / CERTIFICATES

- ACS, KTW, W270, TÜV

## TYPE OVERVIEW

NovaMix Value 50 FS (Fail Safe) | Thermostatic mixing valve
Temperature range 20 – 50 °C

| Order no. | DN | G | Built-in check valve | A | E (l/min) | $k_{vs}$ |
|---|---|---|---|---|---|---|
| 253.3002.000 | 15 | ¾" | no | 76 | 26 | 1.6 |
| 253.3003.000 | 20 | 1" | no | 77 | 36 | 2.2 |
| 253.3004.000 | 25 | 1 ¼" | no | 77 | 56 | 3.4 |
| 253.3102.000 | 15 | ¾" | yes | 76 | 25 | 1.5 |
| 253.3103.000 | 20 | 1" | yes | 77 | 35 | 2.1 |
| 253.3104.000 | 25 | 1 ¼" | yes | 77 | 55 | 3.3 |

NovaMix Value 65 FS (Fail Safe) | Thermostatic mixing valve
Temperature range 45 – 65 °C (compliant with EN15092)

| Order no. | DN | G | Built-in check valve | A | E (l/min) | $k_{vs}$ |
|---|---|---|---|---|---|---|
| 253.1002.000 | 15 | ¾" | no | 76 | 26 | 1.6 |
| 253.1003.000 | 20 | 1" | no | 77 | 36 | 2.2 |
| 253.1004.000 | 25 | 1 ¼" | no | 77 | 56 | 3.4 |
| 253.1102.000 | 15 | ¾" | yes | 76 | 25 | 1.5 |
| 253.1103.000 | 20 | 1" | yes | 77 | 35 | 2.1 |
| 253.1104.000 | 25 | 1 ¼" | yes | 77 | 55 | 3.3 |

NovaMix Value 70 FS (Fail Safe) | Thermostatic mixing valve
Temperature range 35 – 70 °C (75 °C for Legionella flushing)

| Order no. | DN | G | Built-in check valve | A | E (l/min) | $k_{vs}$ |
|---|---|---|---|---|---|---|
| 253.2002.000 | 15 | ¾" | no | 76 | 26 | 1.6 |
| 253.2003.000 | 20 | 1" | no | 77 | 36 | 2.2 |
| 253.2004.000 | 25 | 1 ¼" | no | 77 | 56 | 3.4 |
| 253.2102.000 | 15 | ¾" | yes | 76 | 25 | 1.5 |
| 253.2103.000 | 20 | 1" | yes | 77 | 35 | 2.1 |
| 253.2104.000 | 25 | 1 ¼" | yes | 77 | 55 | 3.3 |

**A** = Housing without check valves
**E** = Extracted (outlet) quantity at Δp = 1,0 bar
No additional seals required when using the check valves

## DIMENSIONAL DRAWING

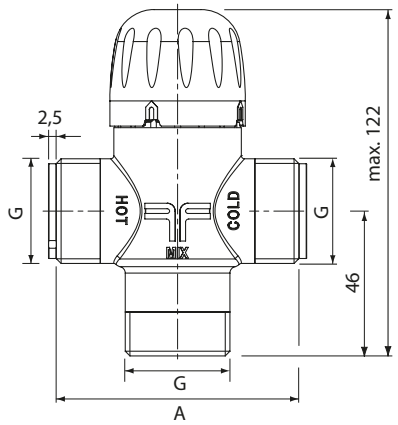

## NOTE

The brochure „NOVAMIX ONE RANGE - NEW APPLICATIONS" contains additional information on the various applications of Taconova mixing valves.

## PRESSURE LOSS DIAGRAM

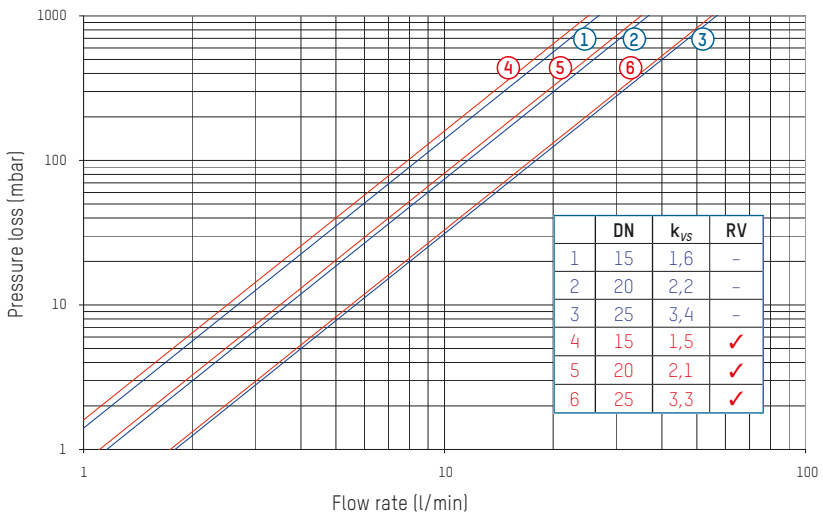


| | DN | $k_{VS}$ | RV |
|---|---|---|---|
| 1 | 15 | 1,6 | – |
| 2 | 20 | 2,2 | – |
| 3 | 25 | 3,4 | – |
| 4 | 15 | 1,5 | ✓ |
| 5 | 20 | 2,1 | ✓ |
| 6 | 25 | 3,3 | ✓ |

## ACCESSORIES

### INSULATION BOX

| Order no. | DN |
|---|---|
| 296.2329.000 | 15 |
| 296.2330.000 | 20 |
| 296.2331.000 | 25 |

### CONNECTION SET FOR THREADED PIPE

| Order no. | DN | G x R |
|---|---|---|
| 210.6630.004 | 15 | ¾" x ½" |
| 210.6631.004 | 20 | 1" x ½" |
| 210.6632.004 | 20 | 1" x ¾" |
| 210.6633.004 | 25 | 1¼" x 1" |

### CHECK VALVE

| Order no. | DN | G |
|---|---|---|
| 296.5210.003 | 15 | ¾" |
| 296.5211.003 | 20 | 1" |
| 296.5212.003 | 25 | 1¼" |

## SPARE PARTS

### REGULATING PISTON WITH THERMOSTATIC ELEMENT

| Order no. | Control range |
|---|---|
| 298.5280.000 | for all versions |

### CAP AND SPINDEL

| Order no. | Control range | G |
|---|---|---|
| 298.5281.000 | 45 – 65 °C | ¾" |
| 298.5282.000 | 45 – 65 °C | 1" |
| 298.5283.000 | 45 – 65 °C | 1¼" |
| 298.5284.000 | 35 – 70 °C | ¾" + 1" |
| 298.5285.000 | 35 – 70 °C | 1¼" |

Subject to modification. 11/2018

CONTACT AND FURTHER INFORMATION TACONOVA.COM

Taconova Group AG | Neunbrunnenstrasse 40 | CH-8050 Zurich | T +41 44 735 55 55 | F +41 44 735 55 02 | group@taconova.com

taconova

# NOVAMIX HIGH CAPACITY

## THERMOSTATIC MIXING VALVE

W270

## ADVANTAGES

- Constant temperature of the water at the outlet
- Automatic mixing function without the need for auxiliary power
- Infinite regulation of the mixed water temperature in the range from 20 – 70 °C
- Protection against scalding; the NovaMix High Capacity model closes tightly
- Special design with anti-scalding device
- Can be used in panel heating systems and for loading storage tanks by means of solid-fuel boilers

Maintaining constant mix temperatures and limiting temperatures in hot water systems

### DESCRIPTION

The automatic thermostatic mixing valve NovaMix High Capacity ensures a constant temperature of the mixed water at the outlet when used as the central mixing device. This prevents scalding at the outlet, even with high storage tank temperatures.
The large valve cross sections in the NovaMix High Capacity reduce the valve's intrinsic pressure loss (high $k_{VS}$), permitting high flow rates even at peak times. Special valve seals on the controller piston reduce unwanted mixtures to a minimum (very low internal cold water leakage rate), which provides maximum utilization of the storage temperature.

The NovaMix High Capacity is mainly used in sanitary applications (SVGW approval) as a regulating device for reducing the temperature of the water coming out of hot water tanks.
It can also be used in numerous other applications requiring a constant mixing temperature. For example as a mixing unit for constant water mixing temperatures in panel heating systems and for loading storage tanks by means of solid-fuel boilers.

### INSTALLATION POSITION

Any.

### OPERATION

The mixing valve is supplied with hot water from the storage tank and cold water from the mains network.
The temperature of the mixed water is detected by the thermostatic expansion element. If the mixed water temperature diverges from the target value, the thermostatic expansion element moves the regulator piston, thus regulating the hot and cold water intake quantity accordingly, until the mixed water temperature corresponds to the target value.

### BUILDING CATEGORIES

For pipe installations in drinking water and heating area:

- Apartment blocks, housing estates, multiple dwelling units
- Residential care facilities, hospitals
- Administration and service buildings
- Hotels and restaurants, industrial kitchens
- School buildings and sports facilities
- Commercial and industrial buildings

## SYSTEM/BASIC DIAGRAM

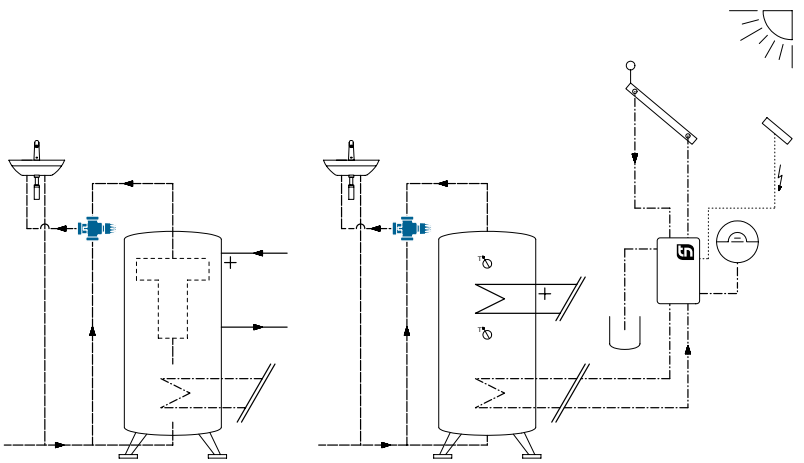

## SPECIFICATION TEXT

See www.taconova.com

## TECHNICAL DATA

**General**

- Adjustable temperature range: 20 – 70 °C
- $k_{VS}$ values and dimensions as per the relevant tables
- Operating temperature $T_{0\,max}$: 90 °C
- Max. operating pressure $P_{0\,max}$: 10 bar
- Temperature stability for mixing: max. 4 K (for change in hot water temperature: 20 K)
- Locking function in the event of failure of the cold water supply
- Weight: 0.9 kg
- Recommended minimum tap flow rate: 5 l/min
- Male thread G (cylindrical) to ISO 228
- Noise class 2
- Installation position: can be installed in any position

**Material**

- Housing and inner parts: brass (resistant to dezincification)
- Seals: EPDM, NBR
- Housing with lime resistant-coating

**Fluids**

- Heating water (VDI 2035; SWKI BT 102-01; ÖNORM H 5195–1)
- Potable water (DIN 1988-200)

**Special application**

- Diverting function possible (inflow via a mixing gate)

## APPROVALS / CERTIFICATES

- ACS, KTW, W270

## NOTE

The brochure „NOVAMIX ONE RANGE - NEW APPLICATIONS“ contains additional information on the various applications of Taconova mixing valves.

## TYPE OVERVIEW

NovaMix High Capacity | Thermostatic mixing valve for storage water heating unit, temperature range 20 – 70 °C

| Order no. | DN | G | E (l/min) | $k_{VS}$ 1 | $k_{VS}$ 2 |
|---|---|---|---|---|---|
| 252.6034.107 | 25 | 1 ¼" | 102 | 6,1 | 5,9 |

**E** = Extracted (outlet) quantity at Δp = 1,0 bar
$k_{VS}$ 1 = without check valve
$k_{VS}$ 2 = with check valve

## DIMENSIONAL DRAWING

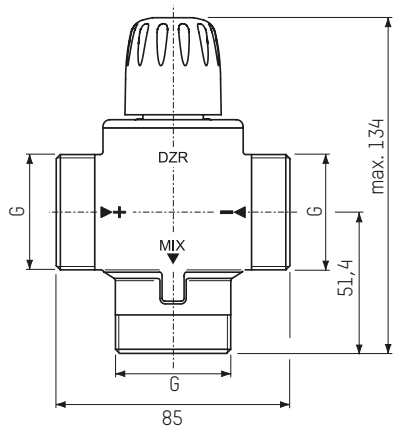


## PRESSURE LOSS DIAGRAMS

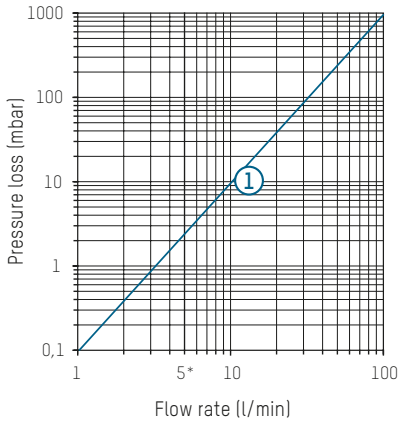


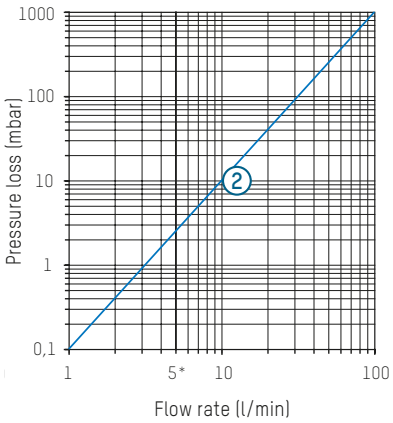


1 252.6034.107 without check valve: $k_{VS}$ = 6,1
2 252.6034.107 with check valve: $k_{VS}$ = 5,9
* Recommended minimum tap flow rate

## ACCESSORIES

### INSULATION BOX

| Order no. | DN |
|---|---|
| 296.2328.000 | 25 |

### CONNECTION SET FOR THREADED PIPE

| Order no. | DN | G x R |
|---|---|---|
| 210.6633.000 | 25 | 1¼" x 1" |

### CONNECTION SET FOR THREADED PIPE WITH CHECK VALVE

| Order no. | DN | G x R |
|---|---|---|
| 296.5205.003 | 25 | 1¼" × 1" |

## SPARE PARTS

### REGULATING PISTON WITH THERMOSTATIC ELEMENT

| Order no. |
|---|
| 298.5268.000 |

Subject to modification. 10/2019

CONTACT AND FURTHER INFORMATION TACONOVA.COM

Taconova Group AG | Neunbrunnenstrasse 40 | CH-8050 Zurich | T +41 44 735 55 55 | F +41 44 735 55 02 | group@taconova.com

taconova

# TACOVENT HYVENT

## FLOAT AIR VENTILATOR

### ADVANTAGES

- Automatic air venting of systems during filling or normal operation
- Automatic aerating at draining
- Trouble-free replacement of the float vent valve under full system pressure thanks to a check valve
- Time saving installation of the float vent valve with the automatic check valve

Permanent and automatic venting and aerating.

### DESCRIPTION

The valve automatically vents and provides air from and to hydraulic systems such as heating, cooling, air conditioning and sanitary equipment on a continual basis.
The combination of an air separator with the aerating and venting greatly increases the efficiency of the venting operation. The automatic self-sealing check valve prevents water from escaping from the mains should the vent valve need to be replaced.

### INSTALLATION POSITION

Vertically upwards.

### OPERATION

The ventilation valve is closed by means of a float. If air collects in the cup, the float sinks and releases the ventilation valve.
The accumulated air escapes until the (inflowing) water pushes the floater down again and the valve closes.
The water once more presses the float against the ventilation valve, and closes the latter. In combination with an upstream TacoVent AirScoop, this guarantees efficient separation of the air-water mixture, and the system is rapidly and automatically vented.

### BUILDING CATEGORIES

For pipe installations in heating area:

- Apartment blocks, housing estates, multiple dwelling units
- Residential care facilities, hospitals
- Administration and service buildings
- Hotels and restaurants, industrial kitchens
- School buildings and sports facilities
- Commercial and industrial buildings

### SYSTEM/BASIC DIAGRAM

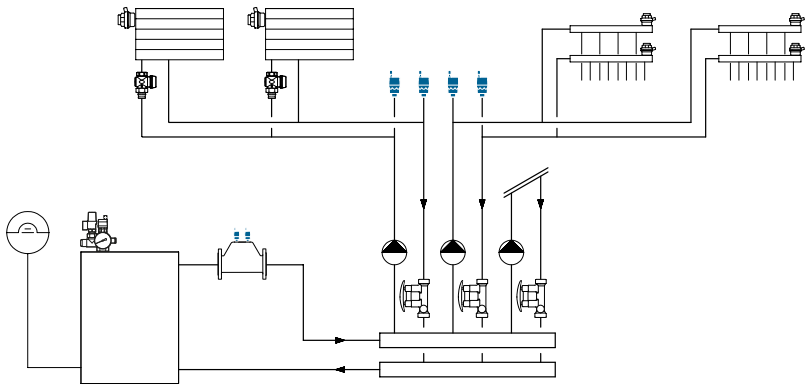

## SPECIFICATION TEXT

See www.taconova.com

## TECHNICAL DATA

**General**

- Operating temperature $T_{0\,max}$: 115 °C
- Operating pressure $P_{0\,max}$: 10 bar
- Exterior threads:
  G 3/8" and G ½" as per ISO 228

**Material**

- Internal parts: Plastic, stainless steel
- Housing: Brass
- Seals: EPDM, NBR, silicone

**Fluids**

- Heating water
  (VDI 2035; SWKI BT 102-01; ÖNORM H 5195–1)

## TYPE OVERVIEW

TacoVent HyVent | Float air ventilator DN10

| Order no. | G[1] | Automatic check valve |
|---|---|---|
| 242.5072.001 | 3/8" | - |
| 242.5072.002 | 3/8" | 3/8" |
| 242.5072.021 | 3/8" | ½" |

Automatic check valve DN10

| Order no. | G[1] × G[2] | To be used with |
|---|---|---|
| 220.5235.000 | 3/8" × 3/8" | 242.5072.001, 242.5072.002 |
| 220.5236.000 | 3/8" × ½" | 242.5072.001, 242.5072.021 |

## DIMENSIONAL DRAWING

Float air ventilator DN10

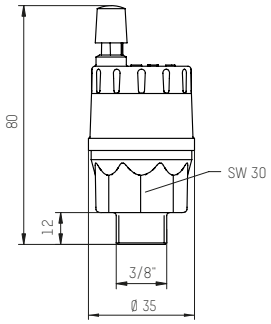


Automatic check valve DN10

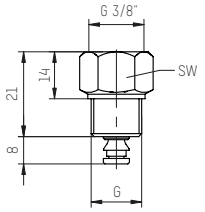


## MEASUREMENT TABLE

Check valve DN10

| Order no. | G | SW |
|---|---|---|
| 220.5235.000 | 3/8" | 19 |
| 220.5236.000 | ½" | 21 |

## OPERATION PRINCIPLE

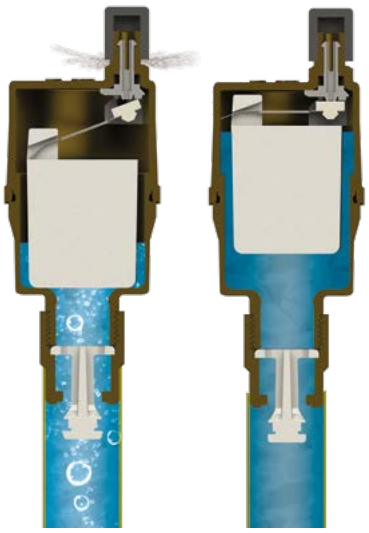

## VENTING CAPACITY (DRY VENTING)

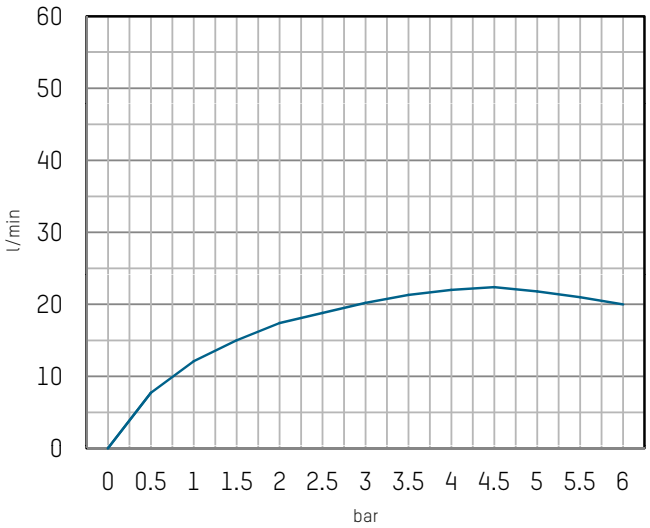


Subject to modification. 01/2022

CONTACT AND FURTHER INFORMATION TACONOVA.COM

Taconova Group AG | Neunbrunnenstrasse 40 | CH-8050 Zurich | T +41 44 735 55 55 | F +41 44 735 55 02 | group@taconova.com

taconova

# TACOVENT VENT

## HEATING RADIATOR VENT VALVES

### ADVANTAGES

- Reliable, long-life operation
- Versatile application in water-ducting systems
- Additional manual quick-venting
- Built-in automatic check valve requires no draining of the system in case of replacement of the valve insert
- Small and compact design
- Saving of energy by optimal vented system

Permanent and automatic venting.

### DESCRIPTION

The TacoVent Vent valves can be used in all systems of water.
The valve automatically vents hydraulic systems such as heating radiators, pipe manifolds, pipes, boilers, reservoirs and underfloor heating manifolds on a continuous basis.
This automatic function improves operational safety (corrosion reduction) and enhances the user's comfort (no airborne noises).
The manual quick-venting allows the fast filling in of the system due to the venting capacity.

### INSTALLATION POSITION

Vertically upwards and horizontally.

### OPERATION

The automatic operation of the vent valve relies on the special swelling discs built in the valve insert.
In dry conditions, the swell discs allow air and gas to escape. The immediate swelling prevents water leakage.
Manual air venting is achieved by undoing the knurled screw and allowing air and gas to escape.
Replacement of the valve insert (including seal and swelling discs) is possible due to the automatic check valve integrated in the vent valve.
At the first start of operation, it's possible that a few drops come out as long as the swelling discs are dry. This doesn't occure in operation.

### BUILDING CATEGORIES

For pipe installations in heating area:

- Apartment blocks, housing estates, multiple dwelling units
- Residential care facilities, hospitals
- Administration and service buildings
- Hotels and restaurants, industrial kitchens
- School buildings and sports facilities
- Commercial and industrial buildings

### SYSTEM/BASIC DIAGRAM

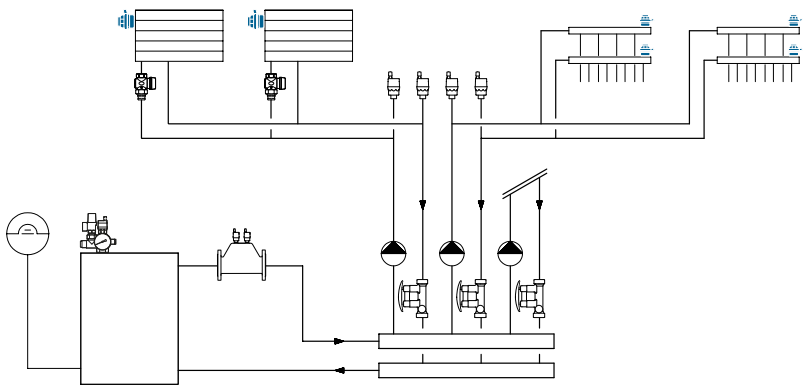

## SPECIFICATION TEXT

See www.taconova.com

## TECHNICAL DATA

**General**

- Operating temperature $T_{0\,max}$: 115 °C
- Operating pressure $P_{0\,max}$: 8.5 bar
- Nominal width:
  - 1/8" – 3/8"
  - 1/2" self-sealing (O-ring)

**Material**

- Valve body: brass nickel-plated
- Valve insert: brass nickel-plated
- Automatic check valve: stainless steel
- Seals: silicone, EPDM

**Fluids**

- Heating water (VDI 2035; SWKI BT 102-01; ÖNORM H 5195–1)
- Water free of chemical additives

## TYPE OVERVIEW

TacoVent Vent | Heating Radiator Vent Valves

| Order no. | DN | G | Self-sealing |
|---|---|---|---|
| 240.5417.000 | 6 | 1/8" | - |
| 240.5418.000 | 8 | 1/4" | - |
| 240.5419.000 | 10 | 3/8" | - |
| 240.5420.000 | 15 | 1/2" | ✓ |

## DIMENSIONAL DRAWING

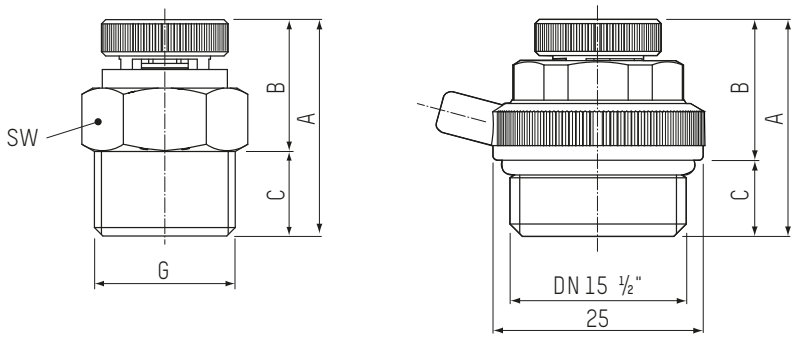


## OPERATION PRINCIPLE

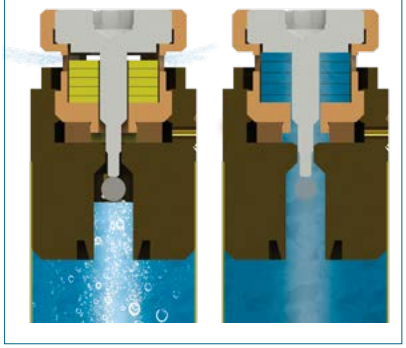

## MEASUREMENT TABLE

TacoVent Vent | Heating Radiator Vent Valves

| Order no. | G | A | B | C | SW |
|---|---|---|---|---|---|
| 240.5417.000 | 1/8" | 26 | 16 | 10 | 14 |
| 240.5418.000 | 1/4" | 26 | 16 | 10 | 14 |
| 240.5419.000 | 3/8" | 26 | 16 | 10 | 17 |
| 240.5420.000 | 1/2" | 26 | 17 | 9 | 19 |

## SECTIONAL DRAWING

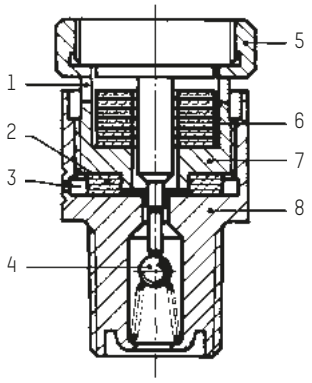


1. Air outlet of automatic venting
2. Seal
3. Air outlet of manual venting
4. Automatic check valve
5. Head of valve insert for manual venting
6. Swelling discs
7. Valve insert
8. Valve body

## SPARE PART

## COMPLETE VALVE INSERT

| Order no. | Version |
|---|---|
| 298.4001.000 | Including seal and swelling discs |

Subject to modification. 01/2022

CONTACT AND FURTHER INFORMATION TACONOVA.COM

Taconova Group AG | Neunbrunnenstrasse 40 | CH-8050 Zurich | T +41 44 735 55 55 | F +41 44 735 55 02 | group@taconova.com

taconova

# TACOVENT AIRSCOOP D

## AIR SEPARATOR

### ADVANTAGES

- High air separation capacity
- Strong robust design
- Service and maintenance-free structure
- Two models for horizontal or vertical installation
- Additional connection for safety valve available from dimension 3"

Permanent air separation.

### DESCRIPTION

The air separator is fitted in the inlet pipe immediately behind the heating source. This is the point with the highest concentration of air and gas driven out of the water.
The expansion occurring inside the AirScoop and the built-in deflectors speed up the process of separating air and water.
When combined with the float air vent TacoVent HyVent, this system ensures air separation as well as elimination.

TacoVent AirScoop DV is recommended for venting in vertical pipes. The air separated from the medium and collected in the bottle can be vented sporadically via the vent valve.

### INSTALLATION POSITION

The horizontal variant may only be installed horizontally and the vertical variant may only be installed vertically. The direction of flow must be kept in mind.

### OPERATION

The air expelled from the water into the heating circuit enters the air separator device as air bubbles. The flow-deflector in the housing drives the air bubbles to the top. The collected air is either automatically vented via the TacoVent HyVent (AirScoop horizontal) or manually via the vent valve (AirScoop vertical). The air-separation capacity can be increased by installing a straight piece of piping of approx. 0.5 m in length upstream the separator.

### BUILDING CATEGORIES

For pipe installations in heating area:

- Apartment blocks, housing estates, multiple dwelling units
- Residential care facilities, hospitals
- Administration and service buildings
- Hotels and restaurants
- School buildings and sports facilities
- Commercial and industrial buildings

### SYSTEM/BASIC DIAGRAM

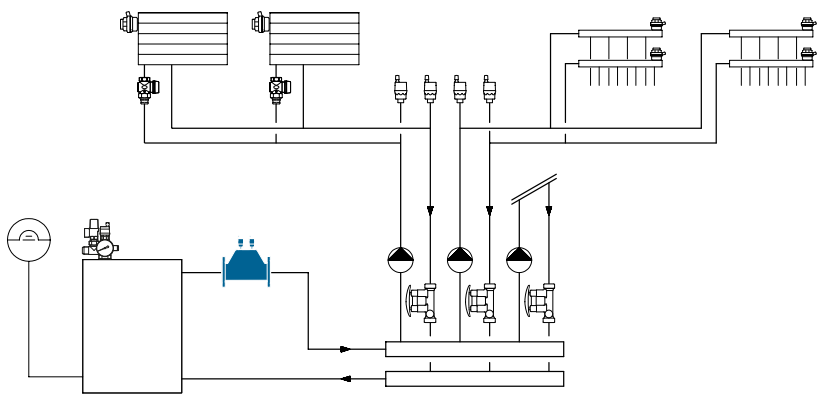

# AIRSCOOP HORIZONTAL

## SPECIFICATION TEXT

See www.taconova.com

## TECHNICAL DATA

**General**

- Operating temperature $T_{0\,max}$: 135 °C
  with float vent valve $T_{0\,max}$: 115 °C
- Operating pressure $P_{0\,max}$: 10 bar

**Material**

- Housing in cast iron GG 25, lacquered

**Fluids**

- Heating water
  (VDI 2035; SWKI BT 102-01;
  ÖNORM H 5195-1)

## TYPE OVERVIEW

TacoVent AirScoop DH | Air separator (horizontal), thread connection

| Order no. | DN | Rp | Zeta ζ | $k_v$ (m³/h) | Weight |
|---|---|---|---|---|---|
| 243.5001.000 | 20 | ¾" | 1,1 | 17,1 | 0,6 kg |
| 243.5002.000 | 25 | 1" | 1,0 | 28,8 | 0,8 kg |
| 243.5003.000 | 32 | 1¼" | 1,0 | 50,4 | 1,6 kg |
| 243.5004.000 | 40 | 1½" | 1,1 | 64,4 | 3,2 kg |
| 243.5005.000 | 50 | 2" | 0,84 | 114,0 | 3,2 kg |
| 243.5006.000 | 65 | 2½" | 0,67 | 237,0 | 6,8 kg |

## OPERATION PRINCIPLE

## DIMENSIONAL DRAWING

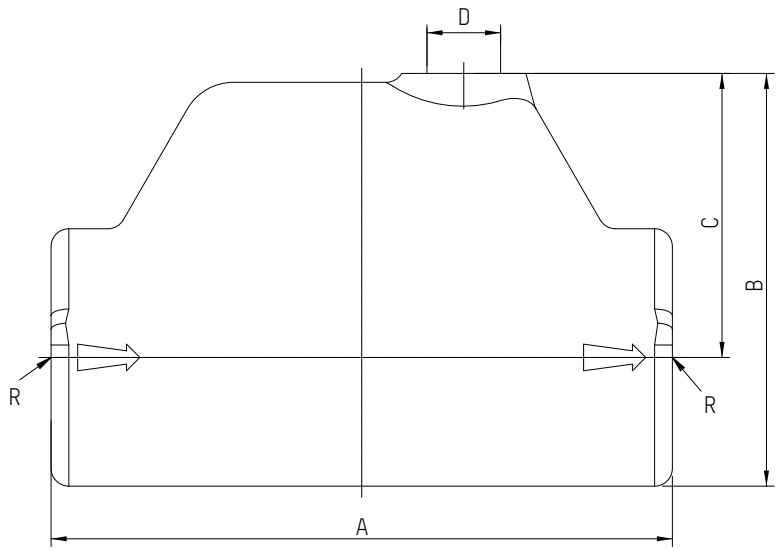


## MEASUREMENT TABLE

TacoVent AirScoop DH | Air separator (horizontal)

| Order no. | R | A | B | C | D |
|---|---|---|---|---|---|
| 243.5001.000 | Rp ¾" | 110 | 69 | 48 | Rp ⅜" |
| 243.5002.000 | Rp 1" | 120 | 79 | 55 | Rp ⅜" |
| 243.5003.000 | Rp 1¼" | 140 | 93 | 64 | Rp ⅜" |
| 243.5004.000 | Rp 1½" | 160 | 96 | 64 | Rp ⅜" |
| 243.5005.000 | Rp 2" | 228 | 120 | 80 | Rp ⅜" |
| 243.5006.000 | Rp 2½" | 235 | 144 | 95 | Rp ⅜" |

## ACCESSORIES

## TACOVENT HYVENT

See separate data sheet

| Order no. | DN | G | Version |
|---|---|---|---|
| 242.5072.001 | 10 | ⅜" | without automatic check valve |
| 242.5072.002 | 10 | ⅜" | with automatic check valve |

# AIRSCOOP VERTICAL

## SPECIFICATION TEXT

See www.taconova.com

## TECHNICAL DATA

**General**

- Operating temperature $T_{0\,max}$: 160 °C
- Operating pressure $P_{0\,max}$: 8 bar

**Material**

- Black steel, stove enamelled

**Fluids**

- Heating water (VDI 2035; SWKI BT 102-01; ÖNORM H 5195–1)
- Water and proprietary additives used against corrosion and freezing up to 50%

## OPERATION PRINCIPLE

## TYPE OVERVIEW

TacoVent AirScoop DV | Ventilating flask (vertical)

| Order no. | DN | G | $k_v$ (m³/h) |
|---|---|---|---|
| 296.7043.000 | 25 | 1" | 11,1 |

## DIMENSIONAL DRAWING

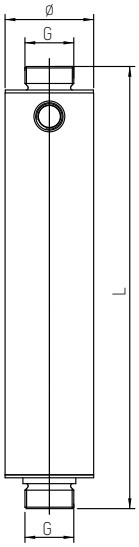


## MEASUREMENT TABLE

TacoVent AirScoop DV | Ventilating flask, vertical

| Order no. | G × G | ø | L |
|---|---|---|---|
| 296.7043.000 | 1"×1" | 60,3 mm | 301 |

Subject to modification. 01/2022



Taconova Group AG | Neunbrunnenstrasse 40 | CH-8050 Zurich | T +41 44 735 55 55 | F +41 44 735 55 02 | group@taconova.com

ENGINEERING
TOMORROW

**Data sheet**

# Pressure independent balancing and control valve AB-QM DN 10-250

*The AB-QM valve equipped with an actuator is a control valve with full authority and an automatic balancing function / flow limitation. Typical applications are: Temperature control with permanent automatic balancing on terminal units (chillers, air-handling units, fan coils, induction units, radiation panels and heat exchangers).*

## Description

The **precise flow control performance** of the AB-QM with a Danfoss actuator provides increased comfort and **superior Total Cost of Ownership** because of savings made on:

- Efficient energy transfer and minimal pumping costs since there are no overflows at partial loads because of the exact pressure independent flow limitation.
- Smaller pump investments and lower energy consumption as the pump head needed is lower than in the traditional setup. With the built in test plugs it is easy to troubleshoot and find the optimal setpoint for the pump.
- Reduced movements of the actuator since the built-in differential pressure controller ensure the pressure fluctuations do not influence the room temperature.
- Achieving a stable temperature in a room leading to a lower average temperature at the same comfort level.
- Minimal flow complains, as the valve performs as designed.
- Minimal blockage complains, as the membrane design makes AB-QM less susceptible to blockage than a cartridge type constriction.
- Trouble-free segmentation of the building project. When sections of a project are finished they can normally not be handed over to the customer with a fully functional HVAC installation. However the AB-QM with a Danfoss actuator will automatically control the flow, even when other parts of the installation are still unfinished. It's not needed to adjust the AB-QM after finalisation of the project.
- Commissioning costs, the costs are close to zero because of a convenient setting procedure without the need for flow charts, calculations or measuring equipment. The AB-QM valves can be set to a precise design value even when the system is up and running.
- Halved mounting costs as the AB-QM valve covers two functions, Balancing & Control

## Control performance

The AB-QM has a linear control characteristic. The AB-QM is pressure independent which means that the control characteristic is independent from the available pressure and is not influenced by a low authority.
The flow limitation on the AB-QM is achieved by limiting the stroke and the Danfoss actuators calibrate to the stroke of the valves. This means that the AB-QM keeps its linear characteristic independent of the setting or differential pressure.

Because of the predictable characteristic the actuators on the AB-QM can be used to change the response from linear to logarithmic (equal percentage). That makes the AB-QM suitable for all applications, including AHUs, where the equal percentage characteristic is needed to get a stable control loop. The actuators can be switched from linear to logarithmic by changing a dipswitch setting on the actuator.

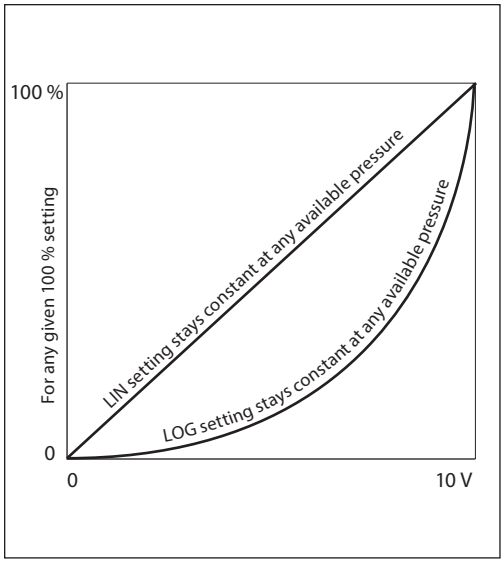


## Applications
- variable flow systems

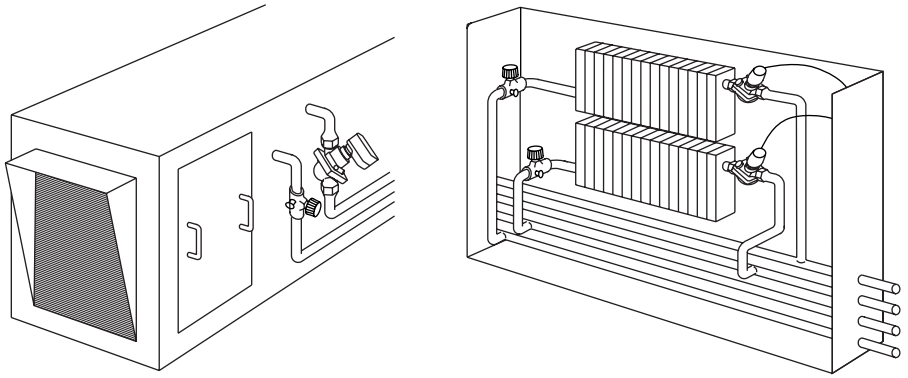

*Air handling unit (AHU) / fan coil unit (FCU)*

An AB-QM with a Danfoss actuator is used as a control valve for terminal units, like an AHU (Air Handling Unit), FCU (Fan Coil Unit) or radiation panel. The AB-QM ensures and control the required flow on every terminal unit and maintains Hydronic balance in the system.

Because of the integrated differential pressure controller the control valve always has 100 % authority and therefore offers always stable control. At partial load there is no overflow, contrary to conventional solutions, because the AB-QM will always limit the flow to exactly what is needed. By installing the AB-QM the whole system is divided in completely independent control loops.

There is a full range of Danfoss actuators available for the AB-QM, suitable for every control strategy. Actuators are available for On/Off, 0-10 Volt, 4-20 mA or floating point.

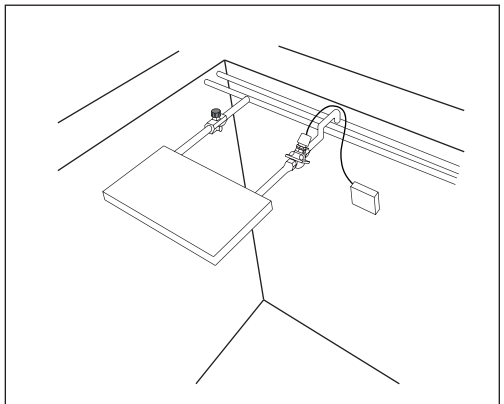

*Radiation panel*

**Applications**
- constant flow systems

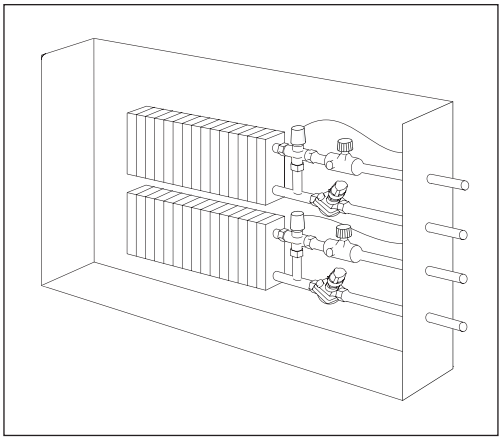

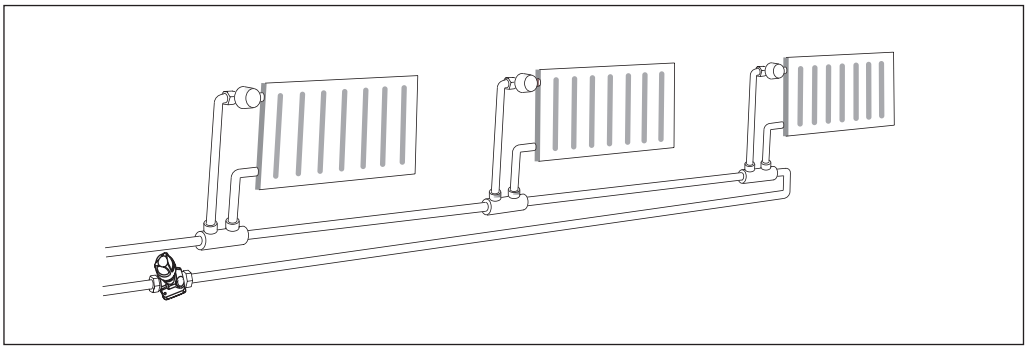

In constant flow system with FCUs or in a one pipe heating system the AB-QM can be installed as an automatic balancing valve in every riser. The AB-QM limits the flow to the set value, thus automatically achieving hydronic balance in the system.

*There are numerous applications in which AB-QM can be used. Every time you need an automatic flow limiter or a control valve you can take advantage of the cost-saving properties of the AB-QM. That includes systems with (floor) heating/cooling, concrete core activation or radiation panels.*

***Note: For more application examples please contact your local Danfoss organization.***

**Easy implementation**

- No Kv or authority calculations needed. Flow is the only parameter to be considered when designing.
- The AB-QM always fits the application because the maximum setting of the AB-QM corresponds with international standards for flow velocity in pipes.
- The AB-QM can be used for all HVAC applications since it can have a linear or logarithmic characteristic when combined with thermal electric or gear actuators.
- Compact design, essential when only limited space is available. For example in fan-coil units.
- Easy commissioning. No specialized staff or measuring equipment needed.
- Easy trouble shooting.
- Fast start-up because AB-QM valves don't need to be flushed or de-aired before use.
- Trouble-free segmentation of the building project. The AB-QM will automatically control the flow, even when parts of the installation are still unfinished. It's not needed to adjust the AB-QM after finalisation of the building project.


© Danfoss | 2017.03 | 3

## Ordering

**AB-QM** threaded version (with test plugs and without test plugs)

| Picture | DN | $Q_{nom.}$ (l/h) | Ext. thread (ISO 228/1) | Code No. | AB-QM | Ext. thread (ISO 228/1) | Code No. |
|---|---|---|---|---|---|---|---|
| 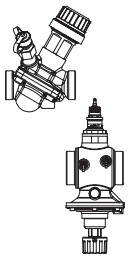 | 10 LF | 150 | G ½A | **003Z1261** | | G ½A | **003Z1251** |
| | 10 | 275 | | **003Z1211** | | | **003Z1201** |
| | 15 LF | 275 | G ¾A | **003Z1262** | | G ¾A | **003Z1252** |
| | 15 | 450 | | **003Z1212** | | | **003Z1202** |
| | 15 HF | 1,135 | | | | | **003Z1222** |
| | 20 | 900 | G 1A | **003Z1213** | | G 1A | **003Z1203** |
| | 20 HF | 1,700 | | | | | **003Z1223** |
| | 25 | 1,700 | G 1 ¼A | **003Z1214** | | G 1 ¼A | **003Z1204** |
| | 25HF | 2,700 | | | | | **003Z1224** |
| | 32 | 3,200 | G 1 ½A | **003Z1215** | | G 1 ½A | **003Z1205** |
| | 32 HF | 4,000 | | | | | **003Z1225** |
| | 40 | 7,500 | G 2A | **003Z0770** | *AB-QM (DN 10-32) can not be upgraded to AB-QM with test plugs!* | | |
| | 50 | 12,500 | G 2 ½A | **003Z0771** | | | |

**AB-QM** industry pack (with test plugs and without test plugs)

| Picture | DN | $Q_{nom.}$ (l/h) | Ext. thread (ISO 228/1) | Code No. | AB-QM | Ext. thread (ISO 228/1) | Code No. |
|---|---|---|---|---|---|---|---|
| 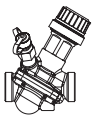 | 10 LF | 150 | G ½A | **003Z1761** | | G ½A | **003Z1751** |
| | 10 | 275 | | **003Z1711** | | | **003Z1701** |
| | 15 LF | 275 | G ¾A | **003Z1762** | | G ¾A | **003Z1752** |
| | 15 | 450 | | **003Z1712** | | | **003Z1702** |
| | 20 | 900 | G 1A | **003Z1713** | | G 1A | **003Z1703** |

**AB-QM** flanged version

| Picture | DN | $Q_{nom.}$ (l/h) | Flange connection | Code No. |
|---|---|---|---|---|
| 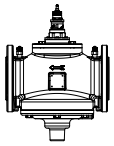 | 50 | 12,500 | PN 16 | **003Z0772** |
| | 65 | 20,000 | | **003Z0773** |
| | 65 HF | 25,000 | | **003Z0793** |
| | 80 | 28,000 | | **003Z0774** |
| | 80 HF | 40,000 | | **003Z0794** |
| | 100 | 38,000 | | **003Z0775** |
| | 100 HF | 59,000 | | **003Z0795*** |
| 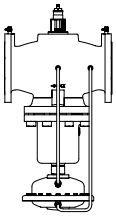 | 125 | 90,000 | | **003Z0705** |
| | 125 HF | 110,000 | | **003Z0715** |
| | 150 | 145,000 | | **003Z0706** |
| | 150 HF | 190,000 | | **003Z0716** |
| | 200 | 200,000 | | **003Z0707** |
| | 200 HF | 270,000 | | **003Z0717** |
| | 250 | 300,000 | | **003Z0708** |
| | 250 HF | 370,000 | | **003Z0718** |

* Will be available in April 2017

**Set-pack** (one MSV-S and one AB-QM without test plugs)

| Picture | DN | $Q_{nom.}$ (l/h) | Ext. thread (ISO 228/1) | Code No. |
|---|---|---|---|---|
| 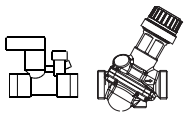 | 15 LF | 275 | G ¾ A | **003Z1238** |
| | 15 | 450 | | **003Z1242** |
| | 20 | 900 | G 1 A | **003Z1243** |
| | 25 | 1,700 | G 1 ¼ A | **003Z1244** |
| | 32 | 3,200 | G 1 ½ A | **003Z1245** |

## Ordering *(continuous)*

### Accessories & spare parts

| Type | Comments | | Code No. |
|---|---|---|---|
| | To pipe | To valve | |
| Union connection (CW617N) (1 pcs.) | R 3/8 | DN 10 | 003Z0231 |
| | R 1/2 | DN 15 | 003Z0232 |
| | R 3/4 | DN 20 | 003Z0233 |
| | R 1 | DN 25 | 003Z0234 |
| | R 1 1/4 | DN 32 | 003Z0235 |
| | R 1 1/2 | DN 40 | 003Z0279 |
| | R 2 | DN 50 | 003Z0278 |
| Tailpiece welding (W. Nr. 1.0308) (1 pcs.) | Weld. | DN 15 | 003Z0226 |
| | | DN 20 | 003Z0227 |
| | | DN 25 | 003Z0228 |
| | | DN 32 | 003Z0229 |
| | | DN 40 | 003Z0270 |
| | | DN 50 | 003Z0276 |
| Tailpiece welding - INOX (W. Nr. 1.4404) (1 pcs.) | Weld. | DN 15 | 003Z1271 |
| | | DN 20 | 003Z1272 |
| | | DN 25 | 003Z1273 |
| | | DN 32 | 003Z1274 |
| | | DN 40 | 003Z1275 |
| | | DN 50 | 003Z1276 |
| Tailpieces for soldering (CW614N) (2 nuts, 2 gaskets, 2 soldering plugs | 12×1 mm | DN 10 | 065Z7016 |
| | 15×1 mm | DN 15 | 065Z7017 |
| Shut-off & protection piece (max. closing pressure 16 bar) | | DN 10-32 | 003Z1230 |
| Shut-off - plastic (max. closing pressure 1 bar) | | | 003Z0240 |
| Handle AB-QM (necessary accessory if installing valve without actuator) | | DN 40-100 | 003Z0695 |
| | | DN 125-150 | 003Z0696 |
| | | DN 200-250 | 003Z0697 |
| Adapter for AB-QM DN 10, G 1/2 internal thread for AB-QM, G 3/8 internal thread (1 pcs.) | | | 003Z3954 |
| Adapter for AB-QM DN 15, G 3/4 internal thread for AB-QM, G 3/4A external thread (1 pcs.) | | | 003Z3955 |
| Adapter for AB-QM DN 20, G 1 internal thread for AB-QM, G 1A external thread (1 pcs.) | | | 003Z3956 |
| Adapter for AB-QM DN 25, G 5/4 internal thread for AB-QM, G 5/4A external thread (1 pcs.) | | | 003Z3957 |
| Adapter AMV(E) 25/35 (AB-QM DN 40-100, 2nd. generation) | | | 003Z0694 |
| Adapter AME 435 for AB-QM DN 40-100 (1st. generation) | | | 065Z0313 |
| Locking ring AB-QM DN10-32 (5 pcs.) | | | 003Z1236 |
| Stroke limiter - TWA (5 pcs. in a bag) | | | 003Z1237 |
| Adapter AME 13 SU for AB-QM (1st. generation) | | | 003Z3959 |
| Adapter AME 13 SU for AB-QM (2nd. generation) | | | 003Z3960 |
| Stem heater for AB-QM DN 40-100 / AME 15 QM | | | 065B2171 |
| Stem heater for AB-QM DN 40-100 / AME 435 QM | | | 065Z0315 |
| Stem heater for AB-QM DN 125, 150 / AME 55 QM | | | 065Z7022 |

| Type | Code No. |
|---|---|
| AB-QM heating insul. cap DN10 | 003Z4730 |
| AB-QM heating insul. cap DN15 | 003Z4731 |
| AB-QM heating insul. cap DN20 | 003Z4732 |
| AB-QM heating insul. cap DN25 | 003Z4733 |
| AB-QM heating insul. cap DN32 | 003Z4734 |
| AB-QM heating insul. cap DN40 | 003Z4735 |
| AB-QM heating insul. cap DN50 | 003Z4736 |

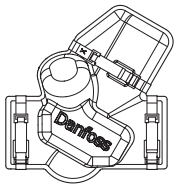


| Type | Comments | Code No. |
|---|---|---|
| Refrig. instalation ABQM DN15_ABNM/TWA-Z | DN15 | 003Z4787 |
| Refrig. instalation ABQM DN20_ABNM/TWA-Z | DN20 | 003Z4788 |
| Refrig. instalation ABQM DN25_ABNM/TWA-Z | DN25 | 003Z4789 |
| Refrig. instalation ABQM DN32_ABNM/TWA-Z | DN32 | 003Z4790 |

| Type | Code No. |
|---|---|
| Set of needle plug (1 pcs.) | 003Z0100 |
| Set of ext. plug (1 pcs.) | 003Z0106 |
| Set of measuring needle (1 pcs.) | 003Z0107 |
| Elbow test plug extension (1 pcs.) | 003Z3944 |
| Straight test plug extension (1 pcs.) | 003Z3945 |
| Straight plug extension set (1 pcs.) | 003Z3946 |

## Ordering *(continuous)*

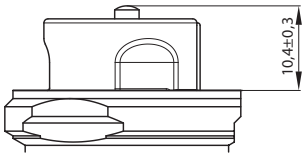


*Closing point (measure) for DN 10-32*

### Combinations AB-QM with electrical actuators (AB-QM DN 10-100) [1]

| Valve type | Stroke (mm) | TWA-Z [3] | AMI 140 | ABNM | AMV 110/120 NL AME 110/120 NL | NovoCon™ | AME 435 QM |
|---|---|---|---|---|---|---|---|
| | | Recommended ordering code numbers (for details refer to data sheets for these actuators) | | | | | |
| | | **082F1266** NC, 230 V | **082H8048** AMI 140 24 V, 12 s/mm, 2-point control | **082F1160** Thermal act. LOG 24 V (0-10 V)<br>**082F1161** Thermal act. LIN 24 V (0-10 V) | **082H8056** AMV 110 NL 24 V, 24 s/mm, 3-point control<br>**082H8057** AME 110 NL 24 V, 24 s/mm, 0-10 V | **003Z8502** NovoCon® S Digital & Hybrid 24V AC/DC<br>**003Z8503** NovoCon® S CO6, Energy, I/O 24V AC/DC | **082H0171** AME 435 QM 24 V |
| DN 10-20 | 2.25 | ✓ | ✓ | ✓ | ✓ | ✓ | - |
| DN 25, 32 | 4.50 | ✓ [2] | ✓ | ✓ [4] | ✓ | ✓ | - |
| DN 40, 50 | 10 | - | - | - | - | - | ✓ |
| DN 65-100 | 15 | - | - | - | - | - | ✓ |

*[1] Minimum recommended AB-QM setting is 20 %*
*[2] up to 60 % of $Q_{nom}$*
*[3] Please be aware that only this type of TWA actuator is to be used with AB-QM*
*[4] up to 90 % of $Q_{nom}$*
*Additional actuator's functionality available, for more info please contact your local Danfoss organization.*

### Combinations AB-QM with electrical actuators (AB-QM, DN 125-250)

| Valve type | Stroke (mm) | AME 55 QM | AME 85 QM |
|---|---|---|---|
| | | Recommended ordering code numbers (for details refer to data sheets for these actuators) | |
| | | **082H3078** 24 V, 8 s/mm, 0-10 V | **082G1453** 24 V, 8 s/mm, 0-10 V |
| DN 125 | 30 | ✓ | - |
| DN 150 | | ✓ | - |
| DN 200 | | - | ✓ |
| DN 250 | | - | ✓ |

*Operational pressure for all AB-QM valves is 6 bar. Closing pressure for all actuators is 16 bar.*
*Additional actuator's functionality available, for more info please contact your local Danfoss organization.*

## Technical data

**AB-QM** (*thread version*)

| Nominal diameter | | DN | 10 LF | 10 | 15 LF | 15 | 15 HF | 20 | 20 HF | 25 | 25 HF | 32 | 32 HF | 40 | 50 |
|---|---|---|---|---|---|---|---|---|---|---|---|---|---|---|---|
| Flow range | $Q_{nom}$ (100 %)[1] | l/h | 150 | 275 | 275 | 450 | 1,135 | 900 | 1,700 | 1,700 | 2,700 | 3,200 | 4,000 | 7,500 | 12,500 |
| | $Q_{high}$[3] | | 180 | 330 | 330 | 540 | 1,250[4] | 1,080 | 1,870[4] | 1,870[4] | 2,970[4] | 3,520[4] | 4,400[4] | 7,500 | 12,500 |
| Setting range [1), 2)] | | % | 20-120 | | | | 20-110 | 20-120 | 20-110[4] | | | | | 40-100 | |
| Diff. pressure [3), 5)] | $\Delta p_{min}$ | kPa | 16 (18) | | | | 35 (40) | 16 (18) | 35 (40) | 20 (25) | 35 (40) | 25 (30) | 35 (40) | 30 | |
| | $\Delta p_{max}$ | | 600 | | | | | | | | | | | | |
| Pressure stage | | PN | 16 | | | | | | | | | | | | |
| Control range | | | 1:1000 | | | | | | | | | | | | |
| Control valve's characteristic | | | Linear (could be converted by actuator to equal percentage) | | | | | | | | | | | | |
| Leakage rate with recommended actuators | | | No visible leakage | | | | | | | max. 0.05 % of $Q_{nom}$ | | | | | |
| For shut off function | | | Acc. to ISO 5208 class A - no visible leakage | | | | | | | | | | | | |
| Flow medium | | | Water and water mixture for closed heating and cooling systems according to plant type I for DIN EN 14868.<br>When used in plant Type II for DIN EN 14868 appropriate protective measures are taken.<br>The requirements of VDI 2035, part 1 + 2 are observed. | | | | | | | | | | | | |
| Medium temperature | | °C | –10 ... +120 | | | | | | | | | | | | |
| Storage and transport temp. | | | –40 … 70 | | | | | | | | | | | | |
| Stroke | | mm | 2.25 | | | | 4 | 2.25 | 4 | 4.5 | | | | 10 | |
| Connection | ext. thread (ISO 228/1) | | G ½ A | | G ¾ A | | | G 1 A | | G 1¼ A | | G 1½ A | | G 2 A | G 1½ A |
| | actuator | | M30 × 1.5 | | | | | | | | | | | Danfoss standard | |
| **Materials in the water** | | | | | | | | | | | | | | | |
| Valve bodies | | | DZR Brass (CuZn36Pb2As - CW 602N) | | | | | | | | | | | Grey iron<br>EN-GJL-250 (GG25) | |
| Membranes and O-rings | | | EPDM | | | | | | | | | | | | |
| Springs | | | W.Nr. 1.4568, W.Nr. 1.4310 | | | | | | | | | | | | |
| Cone (Pc) | | | W.Nr. 1.4305 | | | | | | | | | | | CuZn40Pb3 - CW 614N,<br>W.Nr. 1.4305 | |
| Seat (Pc) | | | EPDM | | | | | | | | | | | W.Nr. 1.4305 | |
| Cone (Cv) | | | CuZn40Pb3 - CW 614N | | | | | | | | | | | | |
| Seat (Cv) | | | DZR Brass (CuZn36Pb2As - CW 602N) | | | | | | | | | | | W.Nr. 1.4305 | |
| Screw | | | Stainless Steel (A2) | | | | | | | | | | | | |
| Flat gasket | | | NBR | | | | | | | | | | | | |
| Sealing agent<br>(only for valves with test plugs) | | | Dimethacrylate Ester | | | | | | | | | | | | |
| **Materials out of the water** | | | | | | | | | | | | | | | |
| Plastic parts | | | PA | | | | | | | | | | | POM | |
| Insert parts and outer screws | | | CuZn39Pb3 - CW 614N; W.Nr. 1.4310; W.Nr. 1.4401 | | | | | | | | | | | - | |

*[1] Factory setting of the valve is done at nominal setting range.*
*[2] Regardless of the setting, the valve can modulate below 1 % of set flow.*
*[3] When set above 100 %, minimum starting pressure needed is higher, see figures in the ().*
*[4] Actuator with compatible stroke must be selected.*
*[5] At min differential pressure valve reaches at least 90% of nominal flow. Declaration of performance is available upon request.*

*According suitability and usage especially in not oxygen tight systems please mind the instructions given by the coolant producer.*

*Pc - pressure controller part*
*Cv - Control valve part*

## Technical data *(continuous)*

**AB-QM** (flange version)

| Nominal diameter | | DN | 50 | 65 | 65 HF | 80 | 80 HF | 100 | 100 HF |
|---|---|---|---|---|---|---|---|---|---|
| Flow range | $Q_{nom}$ (100 %) [1] | l/h | 12,500 | 20,000 | 25,000 | 28,000 | 40,000 | 38,000 | 59,000 |
| | $Q_{high}$ | | 12,500 | 20,000 | 25,000 | 28,000 | 40,000 | 38,000 | 59,000 |
| Setting range [1), 2)] | | % | 40-100 | | | | | | |
| Diff. pressure [3), 5)] | $\Delta p_{min}$ | kPa | 30 | | 60 | 30 | 60 | 30 | 60 |
| | $\Delta p_{max}$ | | 600 | | | | | | |
| Pressure stage | | PN | 16 | | | | | | |
| Control range | | | Acc. to standard IEC 534 control range is high as Cv characteristic is linear. (1:1000) | | | | | | |
| Control valve's characteristic | | | Linear (could be converted by actuator to equal percentage) | | | | | | |
| Leakage rate with recommended actuators | | | max. 0.05 % of $Q_{nom}$ | | | | | | |
| For shut off function | | | Acc. to ISO 5208 class A - no visible leakage | | | | | | |
| Flow medium | | | Water and water mixture for closed heating and cooling systems according to plant type I for DIN EN 14868. When used in plant Type II for DIN EN 14868 appropriate protective measures are taken. The requirements of VDI 2035, part 1 + 2 are observed. | | | | | | |
| Medium temperature | | °C | –10 ... +120 | | | | | | |
| Storage and transport temp. | | | –40 … 70 | | | | | | |
| Stroke | | mm | 10 | 15 | | | | | |
| Connection | flange | | PN 16 | | | | | | |
| | actuator | | Danfoss standard | | | | | | |
| **Materials in the water** | | | | | | | | | |
| Valve bodies | | | Grey iron EN-GJL-250 (GG25) | | | | | | |
| Membranes/ Bellow | | | EPDM | | | | | | |
| O-rings | | | EPDM | | | | | | |
| Springs | | | W.Nr. 1.4568, W.Nr. 1.4310 | | | | | | |
| Cone (Pc) | | | CuZn40Pb3 - CW 614N, W.Nr. 1.4305 | | | | | | |
| Seat (Pc) | | | W.Nr. 1.4305 | | | | | | |
| Cone (Cv) | | | CuZn40Pb3 - CW 614N | | | | | | |
| Seat (Cv) | | | W.Nr. 1.4305 | | | | | | |
| Screw | | | Stainless Steel (A2) | | | | | | |
| Flat gasket | | | NBR | | | | | | |

| Nominal diameter | | DN | 125 | 125 HF | 150 | 150 HF | 200 | 200 HF | 250 | 250 HF |
|---|---|---|---|---|---|---|---|---|---|---|
| Flow range | $Q_{nom}$ (100 %) [1] | l/h | 90,000 | 110,000 | 145,000 | 190,000 | 200,000 | 270,000 | 300,000 | 370,000 |
| | $Q_{high}$ [3] | | 100,000 | 120,000 | 160,000 | 209,000 | 220,000 | 300,000 | 330,000 | 407,000 |
| Setting range [2)] | | % | 40-110 | | | | | | | |
| Diff. pressure [3), 4), 5)] | $\Delta p_{min}$ | kPa | 40 (60) | 60 (80) | 40 (60) | 60 (80) | 45 (65) | 60 (80) | 45 (65) | 60 (80) |
| | $\Delta p_{max}$ | | 600 | 600 | 600 | 600 | 600 | 600 | 600 | 600 |
| Pressure stage | | PN | 16 | | | | | | | |
| Control range | | | 1:1000 | | | | | | | |
| Control valve's characteristic | | | Linear (could be converted by actuator to equal percentage) | | | | | | | |
| Leakage rate with recommended actuators | | | max.0.01 % of $Q_{nom}$ | | | | | | | |
| Flow medium | | | Water and water mixture for closed heating and cooling systems according to plant type I for DIN EN 14868. When used in plant Type II for DIN EN 14868 appropriate protective measures are taken. The requirements of VDI 2035, part 1 + 2 are observed. | | | | | | | |
| Medium temperature | | °C | –10 ... +120 | | | | | | | |
| Storage and transport temp. | | | –40 … 70 | | | | | | | |
| Stroke | | mm | 30 | | | | | | | |
| Connection | flange | | PN 16 | | | | | | | |
| | actuator | | Danfoss standard | | | | | | | |
| **Materials in the water** | | | | | | | | | | |
| Valve bodies | | | Grey iron EN-GJL-250 (GG 25) | | | | | | | |
| Membranes/ Bellow | | | W.Nr.1.4571 | EPDM | | | | | | |
| O-rings | | | EPDM | | | | | | | |
| Springs | | | W.Nr.1.4401 | W.Nr.1.4310 | | | | | | |
| Cone (Pc) | | | W.Nr.1.4404NC | W.Nr.1.4021 | | | | | | |
| Seat (Pc) | | | W.Nr.1.4027 | | | | | | | |
| Cone (Cv) | | | W.Nr.1.4404NC | W.Nr.1.4021 | | | | | | |
| Seat (Cv) | | | W.Nr.1.4027 | | | | | | | |
| Screw | | | W.Nr.1.1181 | | | | | | | |
| Flat gasket | | | Graphite gasket | Non asbestos | | | | | | |

*1) Factory setting of the valve is done at nominal setting range.*
*2) Regardless of the setting, the valve can modulate below 1 % of set flow.*
*3) When set above 100 %, minimum starting pressure needed is higher, see figures in the ().*
*4) In case AB-QM is used above 400 kPa differential pressure contact Danfoss design center to assure proper design.*
*5) At min differential pressure valve reaches at least 90% of nominal flow. Declaration of performance is available upon request.*

*Pc - pressure controller part*
*Cv - Control valve part*

## Design

1. Spindle
2. Stuffing box
3. Pointer
4. Control valve's cone
5. Membrane
6. Main spring
7. Hollow cone (pressure controller)
8. Vulcanized seat (pressure controller)

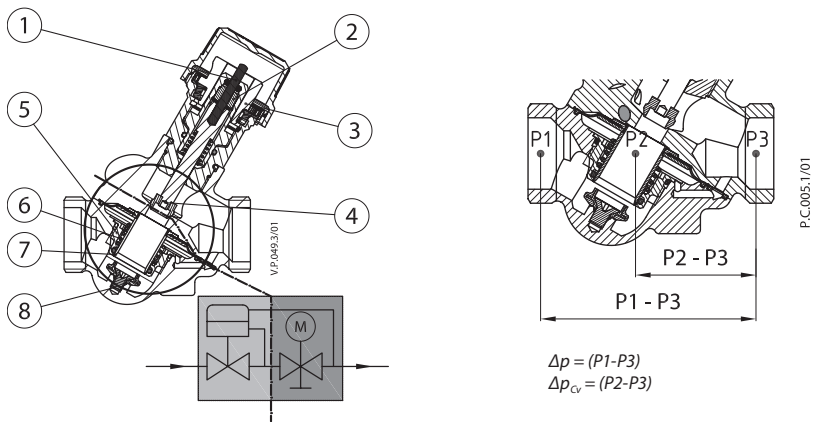


*AB-QM DN 10-32*

**Function:**
The AB-QM valve consists of two parts:
1. Differential pressure controller
2. Control valve

**1. Differential pressure controller DPC**
The differential pressure controller maintains a constant differential pressure across the control valve. The pressure difference $\Delta p_{Cv}$ (P2-P3) on the membrane is balanced with the force of the spring. Whenever the differential pressure across the control valve changes (due to a change in available pressure, or movement of the control valve) the hollow cone is displaced to a new position which brings a new equilibrium and therefore keeps the differential pressure at a constant level.

**2. Control valve Cv**
The control valve has a linear characteristic. It features a stroke limitation function that allows adjustment of the Kv value. The percentage marked on the scale equals the percentage of 100 % flow marked on the pointer. Changing the stroke limitation is done by lifting the blocking mechanism and turning the top of the valve to the desired position, showed on the scale as a percentage. A blocking mechanism automatically prevents unwanted changing of the setting.

1. Shut off screw
2. Main spring
3. Membrane
4. DP cone
5. Seat
6. Valve body
7. Control valves cone
8. Locking screw
9. Scale
10. Stuffing box
11. Spindle

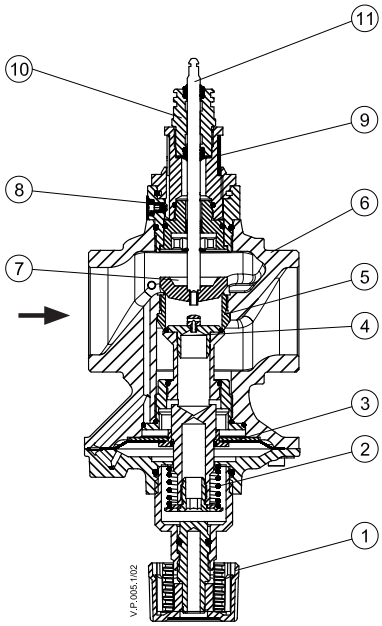


*AB-QM DN 40, 50*

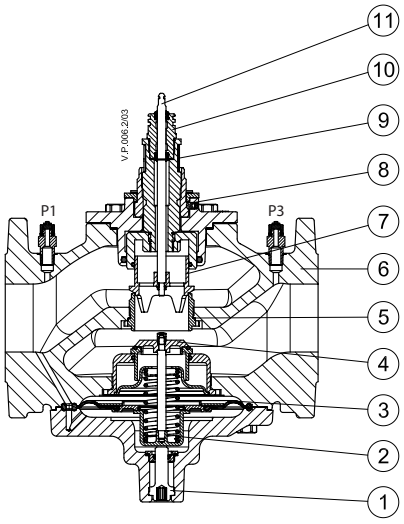


*AB-QM DN 50-100*

**Design** *(continuous)*

1. Valve body
2. Valve seat
3. DPC cone
4. CV cone
5. Controller casting
6. Rolling diaphragm
7. Adjusting screw
8. Bellow for pressure relief on DPC cone

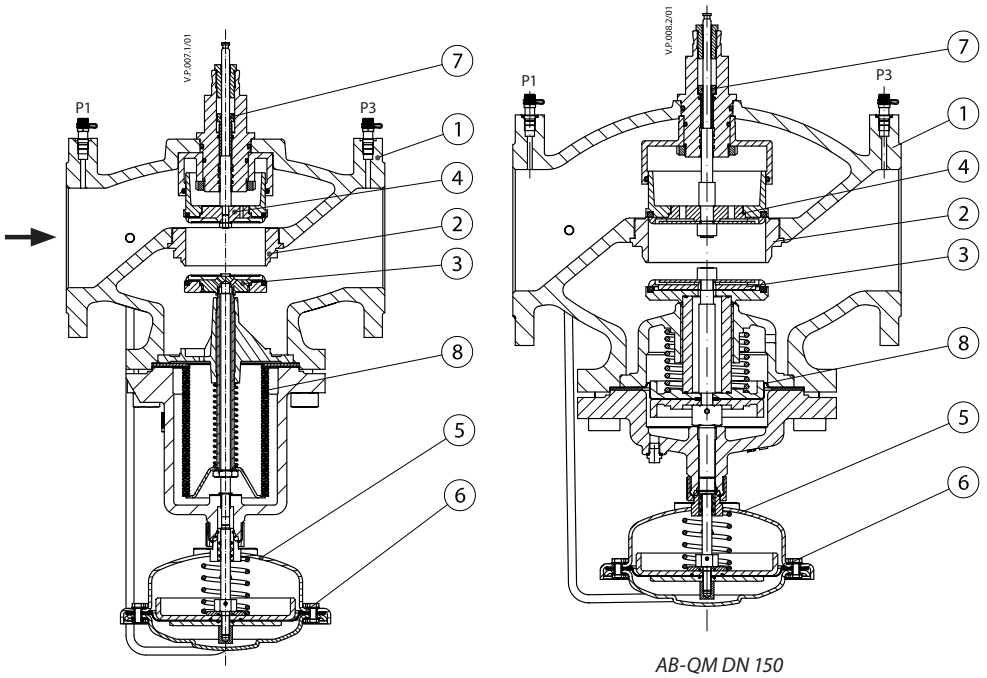


*AB-QM DN 125*

*AB-QM DN 150*

1. Valve body
2. Valve seat
3. DPC cone
4. CV cone
5. Controller casting
6. Rolling diaphragm
7. Adjusting screw
8. Bellow for pressure relief on DPC cone

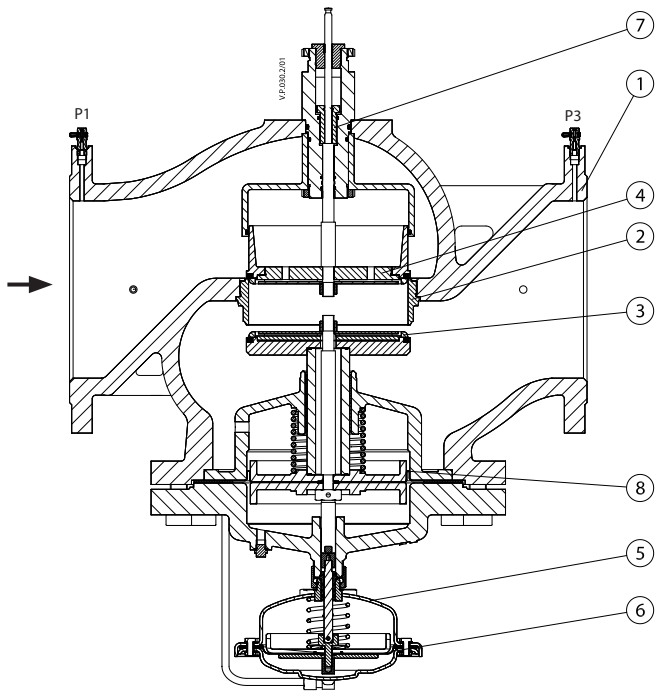


*AB-QM DN 200, 250*

## Sizing

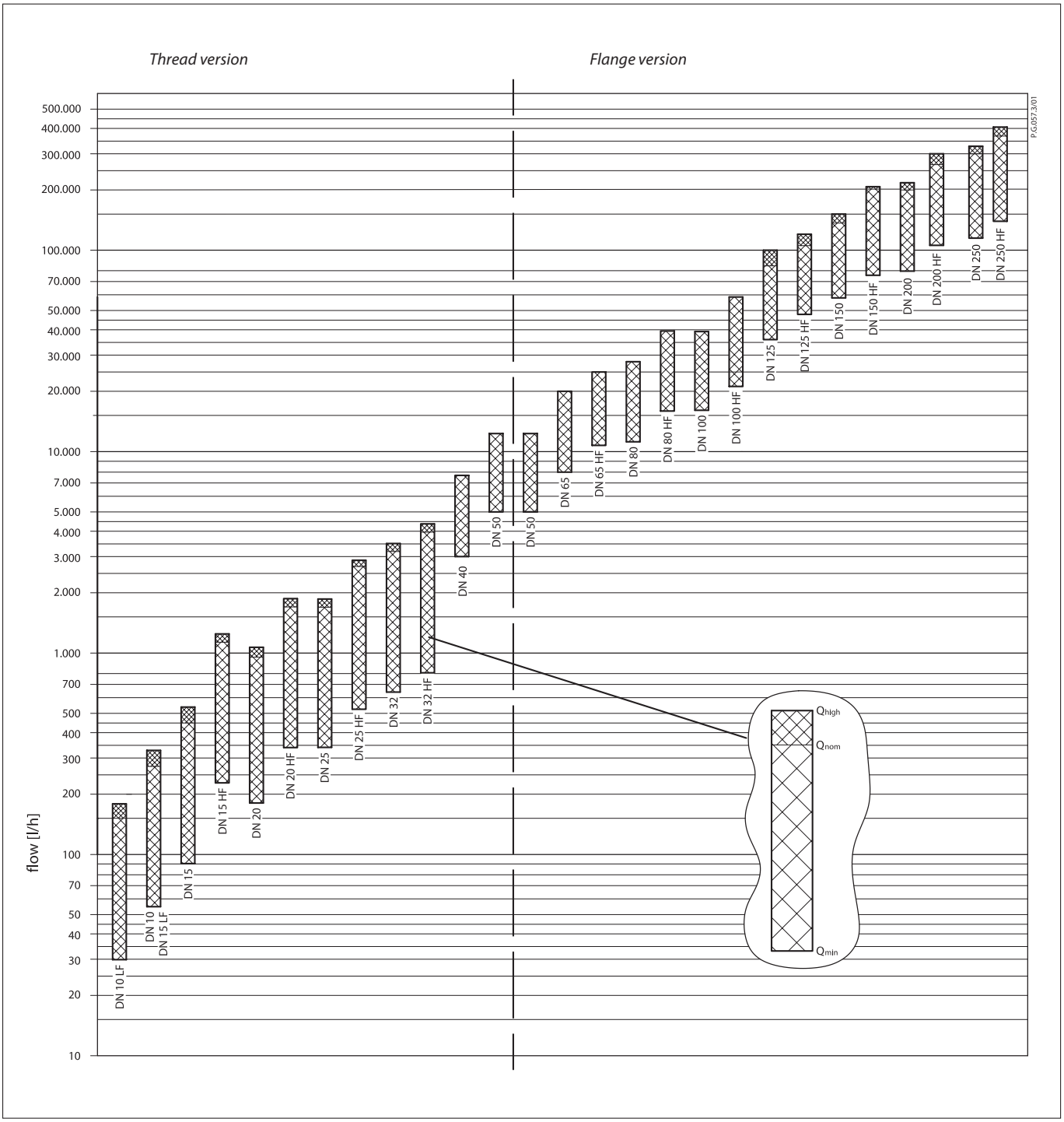
Thread version
Flange version
flow [l/h]
500.000
400.000
300.000
200.000
100.000
70.000
50.000
40.000
30.000
20.000
10.000
7.000
5.000
4.000
3.000
2.000
1.000
700
500
400
300
200
100
70
50
40
30
20
10
DN 10 LF
DN 10
DN 15 LF
DN 15
DN 15 HF
DN 20
DN 20 HF
DN 25
DN 25 HF
DN 32
DN 32 HF
DN 40
DN 50
DN 50
DN 65
DN 65 HF
DN 80
DN 80 HF
DN 100
DN 100 HF
DN 125
DN 125 HF
DN 150
DN 150 HF
DN 200
DN 200 HF
DN 250
DN 250 HF
Qhigh
Qnom
Qmin
P.G.057.3/01

**Sizing** *(continuous)*

**Example 1: Variable flow system**

*Given:*
Cool requirement per unit : 1000 W
Flow temperature in the system: 6 °C
Return temperature in the system: 12 °C

*Required - **control and balancing valves:***
AB-QM and actuators type for BMS system.
*Solution:*
Flow in the system: Q (l/h)
Q = 0.86×1000/(12–6 ) = 143 l/h

*Selected:*
AB-QM DN 10 mm with $Q_{nom}$ = 275 l/h presetting on 143/275 = 0.52 = 52 % of nominal opening.
Actuators: AMV 110NL - 24 V
*Remarks:*
required minimum differential pressure across the AB-QM DN 10: 16 kPa.

**Example 2: Constant flow system**

*Given:*
Cool requirement per unit : 4000 W
Flow temperature in the system : 6 °C
Return temperature in the system : 12 °C

*Required - **automatic flow limiter:***
AB-QM and presetting.

*Solution:*
Flow in the system : Q (l/h)
Q = 0.86 × 4000 / ( 12 – 6 ) = 573 l/h

*Selected:*
AB-QM DN 20 mm with $Q_{nom}$ = 900 l/h presetting on 573/900 = 0.64 = 64 % of maximum opening.

*Remarks:*
required minimum differential pressure across the AB-QM DN 20: 16 kPa.

**Example 3: Sizing AB-QM according pipe dimension**

*Given:*
Flow in system 1.4 $m^3$/h (1400 l/h = 0.38 l/s), pipe dimension DN 25 mm

*Required - **automatic flow limiter:***
AB-QM and presetting.

*Solution:*
In this case we can selected AB-QM DN 25 mm with $Q_{nom}$ = 1700 l/h

In this case it will be recommended to check the maximum velocity in the pipe. For this we calculate velocity in the pipe for condition:
DN 25 mm – Di 27.2 mm

Dimension and condition acceptable, veloscity below 1.0 m/s.

Preseting on the valve AB-QM DN 25 mm
1400/1700 = 0.82 = 82 % of nominal opening.
*Remarks:*
required minimum differential pressure across the AB-QM DN 25: 20 kPa.

**Pump optimising / Trouble shooting**

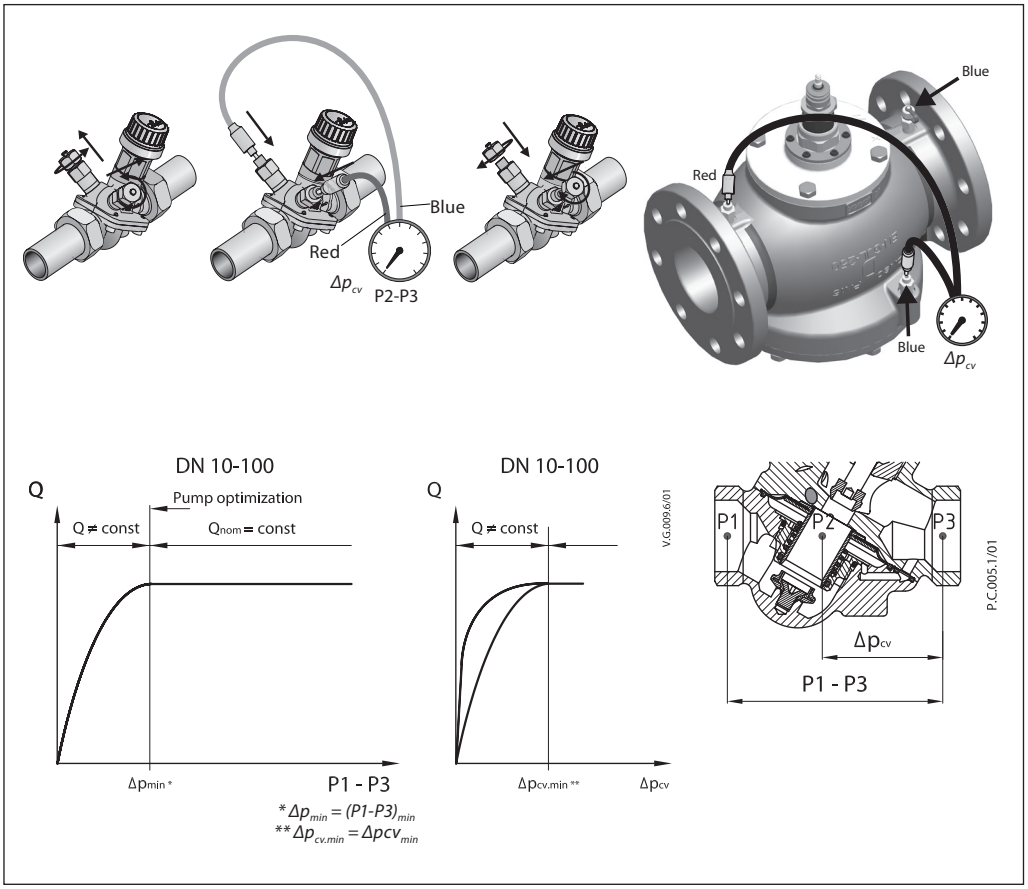


The AB-QM (DN 10-100) features test plugs that allow measuring of the pressure difference Δpcv across the control valve. If the pressure difference exceeds the minimal required pressure is operational and the flow limitation is achieved. The measuring function can be used to verify if enough pressure difference is available and thus verify the flow or measure the flow directly. For detail information how to measure flow on DN 40-250 please refer to Flow checker document.

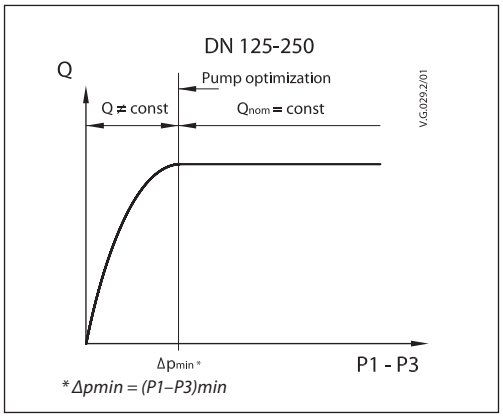


It can also be used to optimize the pump head. The pump head can be decreased until no more than the minimal required pressure is available on the most critical valve (in terms of hydronic). This optimal point is to be found when proportionality between pump head and measured differential pressure cease to exist. Verifying the pressure can be done by using for example Danfoss PFM device (for more details please refer to AB-QM Tech Note).

## Presetting

The calculated flow can be adjusted easily without using special tools.

To change the presetting (factory setting is 100 %) follow the four steps below:

① Remove the blue protective cap or the mounted actuator
② Raise the grey pointer
③ Turn (clock wise to decrease) to the new presetting
④ Press grey pointer back into lock position. After click presetting is locked.

The presetting scale indicates values from 100 % flow to 0 %. Clock wise turning would decrease the flow value while counter clock wise would increase it.

If the valve is a DN 15 then the nom flow = 450 l/h =100 % presetting. To set a flow of 270 l/h you have to set: 270/450 = 60 %.

Danfoss recomends a presetting/flow from 20 % to 100 %. Factory presetting is 100 %.

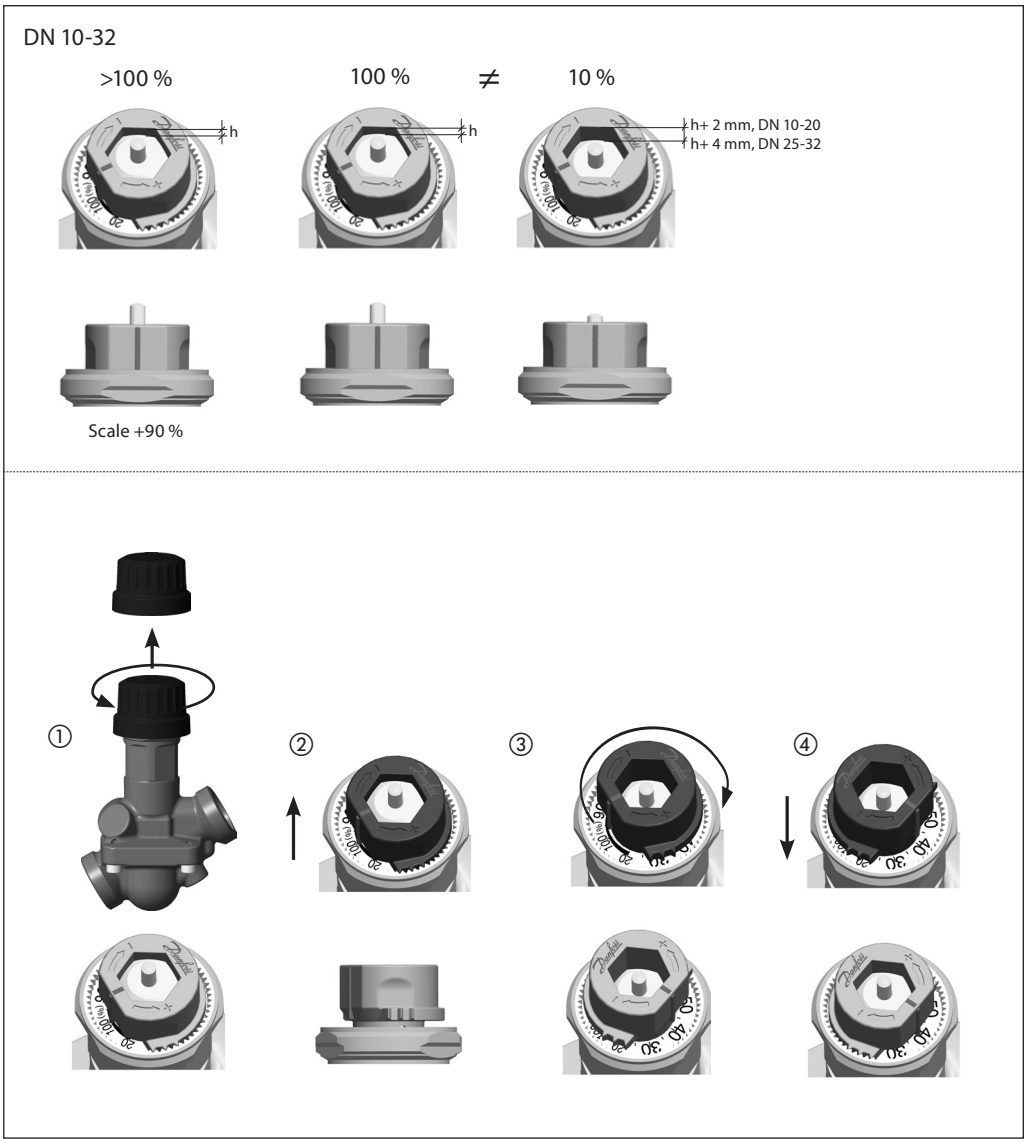

**Presetting** *(continuous)*

DN 40-100

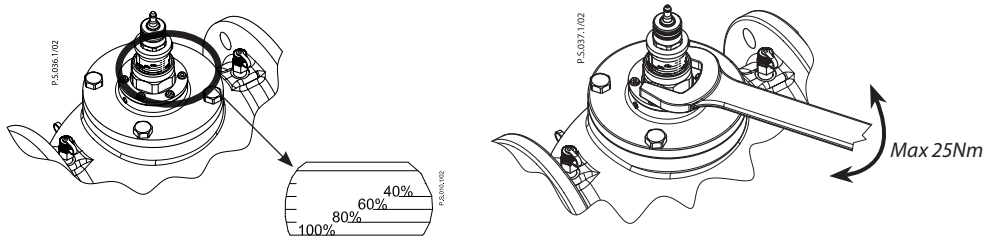


*Note: 1 turn = 10 %*

DN 125-250

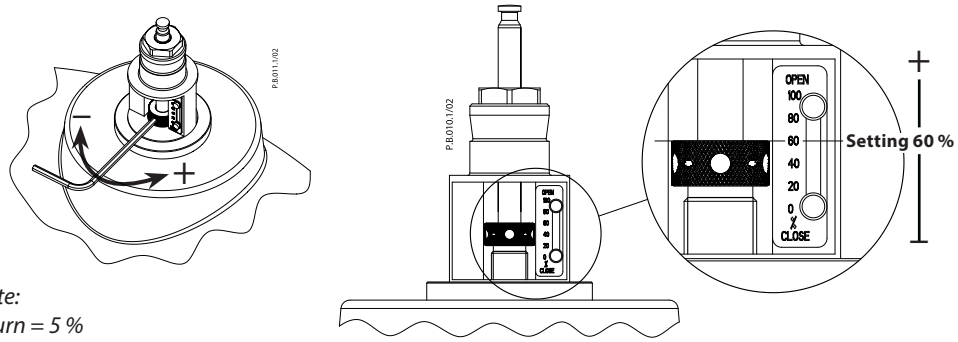


*Note:*
*1 turn = 5 %*

**Service**

**DN 10-32**
For the service shut off function, it is recommended to install the valve in the supply water pipe.

Valves are equipped with plastic protection cap. When closing against higher differential pressure please use accessory - shut-off & protection piece (003Z1230) or set the value to 0 %.

**DN 40-100**
For the service shut-off function, the valve can be installed in either supply or return pipe.

Valves are equipped with manual shut-off for isolating function up to 16 bar.

**DN 125-250**
For the service shut-off function, the valve can be installed in either supply or return pipe.

For shut-off set the valve to 0%.

**Installing**

AB-QM valve is mono-directional meaning that the valve operates when arrow on the valve body is aligned with flow direction. When this rule is disobeyed the valve acts like variable orifice that cause water hammer at sudden closing when available pressure has increased or valve have been set to lower value.

In case when system condition allows backflows it is strongly recommended to use backflow preventer in order to avoid possible water hammer that can damage the valve as well as other elements in the system.

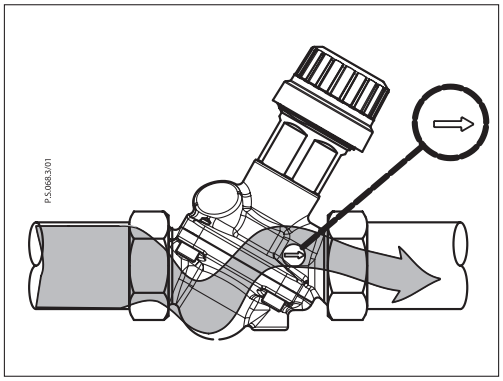

**Tender text**

The pressure independent balancing and control valve which means that the control characteristic is independent from the available pressure. The precise flow control performance of the AB-QM with a Danfoss actuator provides increased comfort and superior Total Cost of Ownership. The AB-QM ensures and control the required flow on every terminal unit and maintains Hydronic balance in the system.

AB-QM has following features:

- Flow limitation function
- Modulating below 1% of set flow, regardless of the setting,
- Authority of 1 at all settings
- Able to close against 16 bar of differential pressure.
- Linear control characteristic
- Scale in percentage of flow
- Control ratio 1:1000
- Test plugs for pump optimization and flow verification for DN 10-250. Available in the range from DN 10 – 250 from one supplier.
- Characteristic changed from linear to equal percentage characteristic at all sizes by adjusting actuator settings.
- Lockable setting
- Leakage rate of no visible leakage for DN 10 - DN 20 in combination with recommended actuator
- Leakage of 0.05 % of the Qnom for DN 25 - DN 100 in combination with recommended actuator
- Leakage of 0.01 % of the Qnom for DN 125 - DN 250 in combination with recommended actuator

## Dimensions

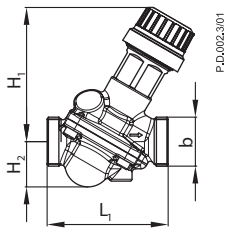


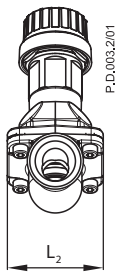


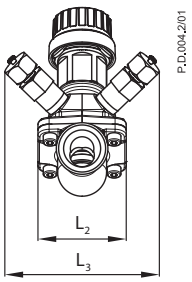


*AB-QM DN 10-32*

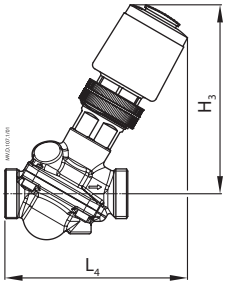


*TWA-Z + AB-QM*

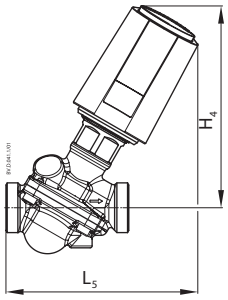


*ABNM + AB-QM*

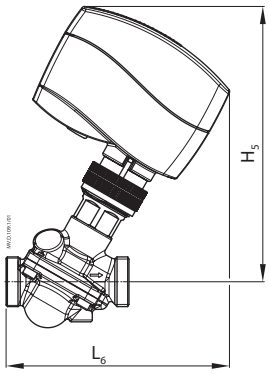


*AMV (E) 110 NL + AB-QM*
*AMI 140 + AB-QM*

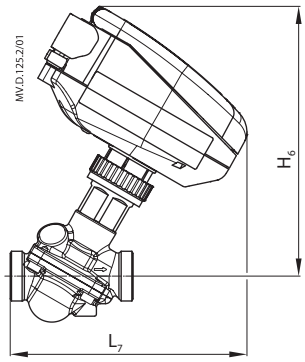


*NovoCon™ + AB-QM*

| Type | $L_1$ | $L_2$ | $L_3$ | $L_4$ | $L_5$ | $L_6$ | $L_7$ | $H_1$ | $H_2$ | $H_3$ | $H_4$ | $H_5$ | $H_6$ | b | Valve weight |
|---|---|---|---|---|---|---|---|---|---|---|---|---|---|---|---|
| | mm | | | | | | | | | | | | | ISO 228/1 | (kg) |
| DN 10 | 53 | 36 | 79 | 92 | 104 | 109 | 119 | 69 | 20 | 100 | 104 | 138 | 140 | G ½ | 0.38 |
| DN 15 | 65 | 45 | 79 | 98 | 110 | 116 | 126 | 72 | 25 | 102 | 108 | 141 | 143 | G ¾ | 0.48 |
| DN 20 | 82 | 56 | 79 | 107 | 120 | 125 | 134 | 74 | 33 | 105 | 112 | 143 | 145 | G 1 | 0.65 |
| DN 25 | 104 | 71 | 79 | 124 | 142 | 142 | 149 | 82 | 42 | 117 | 124 | 155 | 153 | G 1 ¼ | 1.45 |
| DN 32 | 130 | 90 | 79 | 142 | 154 | 160 | 167 | 93 | 50 | 128 | 136 | 166 | 164 | G 1 ½ | 2.21 |

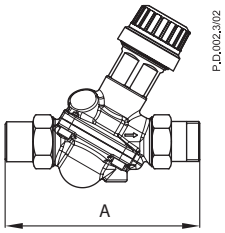


*AB-QM DN 10-50*

| DN | Union connection A* [mm] | Tailpiece welding A* [mm] | Talpieces for soldering A* [mm] |
|---|---|---|---|
| 10 | 79 | | 70 |
| 15 | 92.5 | 102 | 87 |
| 20 | 112.5 | 124 | |
| 25 | 139 | 146 | |
| 32 | 168.5 | 172 | |
| 40 | 155 | 157 | |
| 50 | 187 | 182 | |

** Length is decreased with installation due to deforamtion of the gasket.*

**Dimensions** *(continuous)*

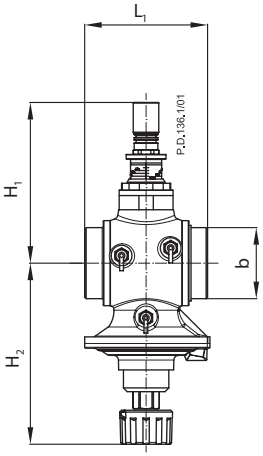


*AB-QM DN 40, 50*

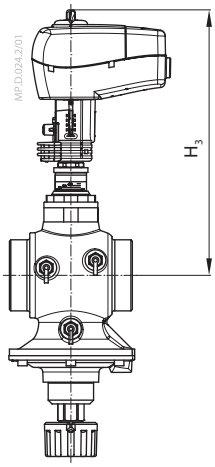


*AME 435 QM + AB-QM*

| Type | $L_1$ | $H_1$ | $H_2$ | $H_3$ | b | Weight |
|---|---|---|---|---|---|---|
| | mm | | | | ISO 228/1 | kg |
| DN 40 | 110 | 170 | 174 | 280 | G 2 | 6.9 |
| DN 50 | 130 | 170 | 174 | 280 | G 2 ½ | 7.8 |

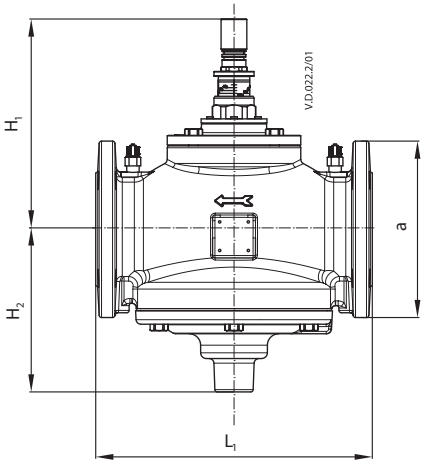


*AB-QM DN 50-100*

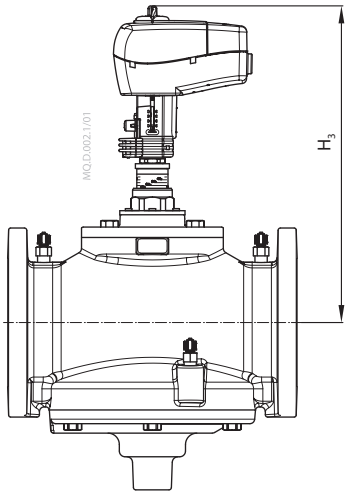


*AME 435 QM + AB-QM*

| Type | $L_1$ | $H_1$ | $H_2$ | $H_3$ | a (EN 1092-2) | Weight (kg) |
|---|---|---|---|---|---|---|
| | mm | | | | | |
| DN 50 | 230 | 170 | 174 | 280 | 165 | 14.2 |
| DN 65 | 290 | 220 | 172 | 330 | 185 | 38.0 |
| DN 80 | 310 | 225 | 177 | 335 | 200 | 45.0 |
| DN 100 | 350 | 240 | 187 | 350 | 220 | 57.0 |

**Dimensions** *(continuous)*

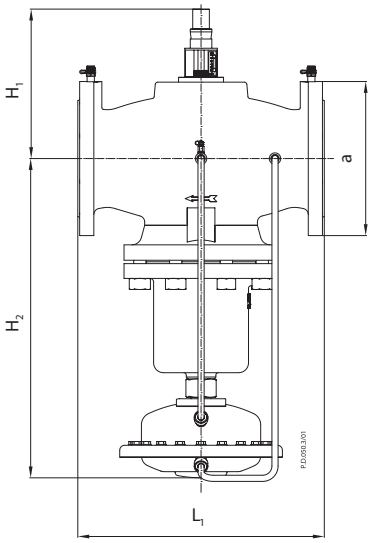


*AB-QM DN 125*

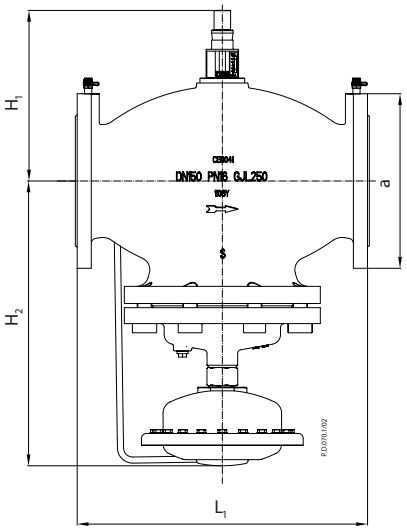


*AB-QM DN 150*

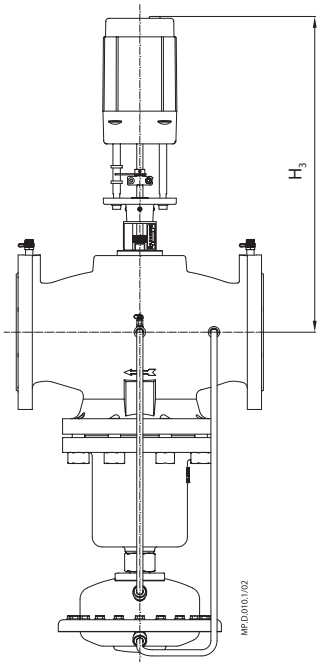


*AME 55 QM + AB-QM DN 125*

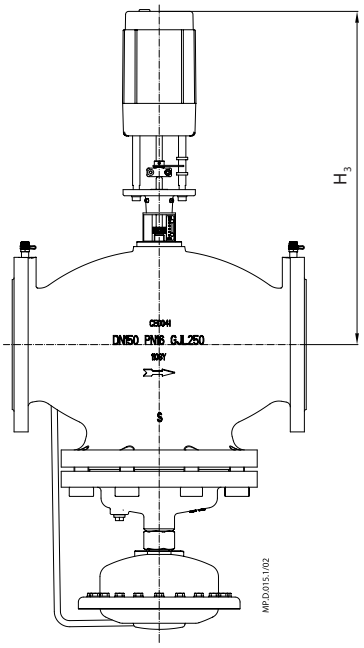


*AME 55 QM + AB-QM DN 150*

| Type | $L_1$ | $H_1$ | $H_2$ | $H_3$ | a | Weight |
|---|---|---|---|---|---|---|
| | mm | | | | (EN 1092-2) | (kg) |
| DN 125 | 400 | 272 | 518 | 507 | 250 | 85.3 |
| DN 150 | 480 | 308 | 465 | 518 | 285 | 138 |

**Dimensions** *(continuous)*

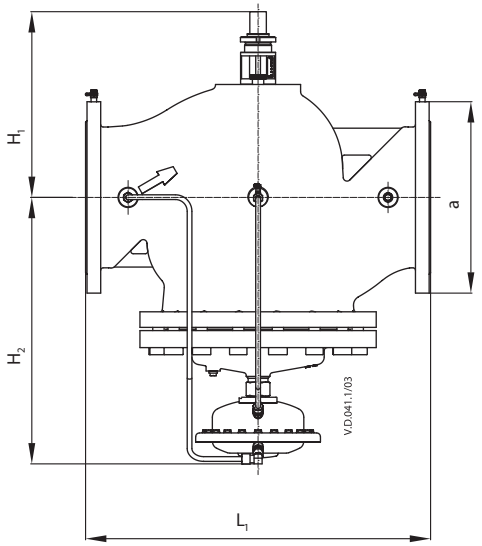


*AB-QM DN 200, 250*

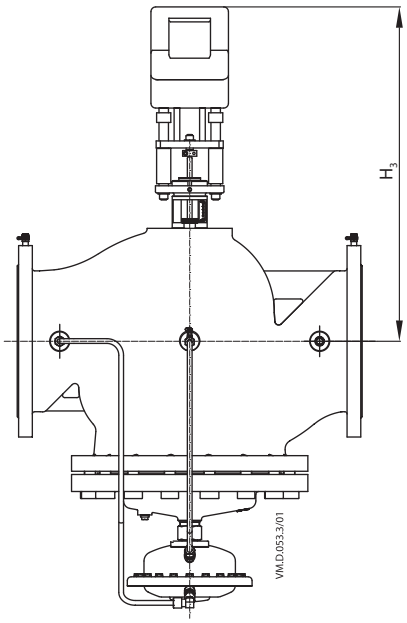


*AME 85 QM + AB-QM DN 200, 250*

| Type | $L_1$ | $H_1$ | $H_2$ | $H_3$ | a | Weight |
|---|---|---|---|---|---|---|
| | mm | | | | (EN 1092-2) | (kg) |
| DN 200 | 600 | 434 | 483 | 618 | 340 | 219 |
| DN 250 | 730 | 430 | 533 | 708 | 405 | 342 |

Danfoss can accept no responsibility for possible errors in catalogues, brochures and other printed material. Danfoss reserves the right to alter its products without notice. This also applies to products already on order provided that such alterations can be made without subsequential changes being necessary in specifications already agreed.
All trademarks in this material are property of the respective companies. Danfoss and the Danfoss logotype are trademarks of Danfoss A/S. All rights reserved.

Data sheet

# Differential pressure controller with flow limitation and with integrated control valve (PN 16)

## AHPBM-F – flow mounting, fixed setting

### Description

AHPBM-F is a self-acting differential pressure controller with flow limitation primarily for use in direct-connected district heating systems ***with mixing loop only***. The controller closes on rising differential pressure or when set max. flow is exceeded.

It can be combined with Danfoss electrical actuators AMV(E) and controlled by ECL electronic controllers.

The controller has a control valve with adjustable flow restrictor, connection neck for electrical actuator, and an actuator with one control diaphragm.

Controllers are used together with Danfoss electrical actuators:
- AMV(E) 10
- AMV(E) 13 with spring return function
- AMV(E) 130, AMV(E) 140
- AMV(E) 130H, AMV(E) 140H with manual override knob

AHPBM-F combined with AMV(E) 13 has been approved according to DIN EN 14597.

**Main data:**
- DN 15-32
- $k_{vs}$ 1.0-6.3 $m^3/h$
- PN 16
- Fixed Δp setting:
  - 0.12 bar for DN 15-20
  - 0.14 bar for DN 25-32
- Temperature:
  - Circulation water / glycolic water up to 30%: 2 … 120 °C
- Connections:
  - Ext. thread (weld-on, thread and flange tailpieces)

### Ordering

*Example:*
*Differential pressure controller with flow limitation (fixed setting) and integrated control valve, DN 15, $k_{vs}$ 1.6, PN 16, flow restrictor Δp 0.12 bar, $t_{max}$ 120 °C, ext. thread*

- *1× AHPBM-F DN 15 controller*
  *Code No.:* ***003L3582***

*Option:*
- *1× Impulse tube set AH, 1.5 m*
  *Code No:* ***003L8152***
- *1× Fitting for imp. tube*
  *Code No:* ***003L5042***
- *1× Weld-on tailpieces*
  *Code No.:* ***003H6908***

*External impulse tube (AH), nipple for impulse tube and electrical actuators AMV(E) must be ordered separately.*

**AHPBM-F** Controller

| Picture | DN (mm) | $k_{vs}$ ($m^3/h$) | Connection | | Δp setting range (bar) | Code No. |
|---|---|---|---|---|---|---|
| | 15 | 1.0 | Cylin. ext. thread acc. to ISO 228/1 | G ¾ A | 0.12 | **003L3580** |
| | | 1.25 | | | | **003L3581** |
| | | 1.6 | | | | **003L3582** |
| | 20 | 2.5 | | G 1 A | | **003L3583** |
| | 25 | 4.0 | | G 1¼ A | 0.14 | **003L3584** |
| | 32 | 6.3 | | G 1¾ A | | **003L3585** |

## Ordering *(continuous)*

### Accessories

| Picture | Type designation | DN | Connection | | Code No. |
|---|---|---|---|---|---|
| | Weld-on tailpieces | 15 | - | | **003H6908** |
| | | 20 | | | **003H6909** |
| | | 25 | | | **003H6910** |
| | | 32 | | | **003H6911** |
| | External thread tailpieces | 15 | Conical ext. thread acc. to EN 10226-1 | R ½ | **003H6902** |
| | | 20 | | R ¾ | **003H6903** |
| | | 25 | | R 1 | **003H6904** |
| | | 32 | | R 1¼ | **003H6905** |
| 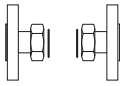 | Flange tailpieces | 15 | Flanges PN 25, acc. to EN 1092-2 | | **003H6915** |
| | | 20 | | | **003H6916** |
| | | 25 | | | **003H6917** |
| 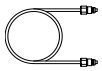 | Impulse tube set AH | Description:<br>- 1× copper tube Ø 3 × 1 mm<br>- 2× fitting for imp. tube connection to actuator and pipe G 1/16 | | 1.5 m | **003L3561** |
| | | | | 2.5 m | **003L5043** |
| | | | | 5 m | **003L3562** |
| | Impulse tube set AH for pressure reduction | Description:<br>- 1× stainless steel tube Ø 0.8 × 0.2 mm<br>- 2× fitting for imp. tube connection to actuator and pipe G 1/16 | | 0.8 m | **003L3560** |
| | Fitting for impulse tube connection to pipe | | | G 1/16-R 3/8 | **003L5042** |
| | | | | G 1/16-R ¼ | **003L8151** |
| | 10 EPDM o-rings for impulse tube | | | | **003L8175** |

## Technical data

### Valve

| **Nominal diameter** | **DN** | **15** | | | **20** | **25** | **32** |
|---|---|---|---|---|---|---|---|
| $k_{VS}$ value | m³/h | 1.0 | 1.25 | 1.6 | 2.5 | 4.0 | 6.3 |
| $Q_{min}$ | | 0.035 | 0.11 | 0.2 | 0.25 | 0.43 | 0.65 |
| $Q_{nom}$* | | 0.43 | 0.7 | 1.0 | 1.2 | 2.2 | 3.4 |
| Stroke | mm | 5.5 | | | 5 | | |
| Control ratio | | > 1:30 | | > 1:50 | | > 1:100 | |
| Control characteristic | | Linear | | | | | |
| Cavitation factor z ** | | ≥ 0.6 | | | | | |
| Leakage acc. to standard IEC 60534 | | 0.05 | | | | | |
| Nominal pressure | PN | 16 | | | | | |
| Min. differential pressure | bar | See remark *** | | | | | |
| Max. differential pressure | | 4 | | | | | |
| Medium | | Circulation water / glycolic water up to 30% | | | | | |
| Medium pH | | Min. 7, max. 10 | | | | | |
| Medium temperature | °C | 2 … 120 | | | | | |
| Connections | | External thread | | | | | |
| **Materials** | | | | | | | |
| Valve body /valve seat / valve cone | | Dezincing free brass CuZn36Pb2As | | | | | |
| Sealing | | EPDM | | | | | |

* *At differential pressure across the controller* $\Delta p_{AHPBM-F} \geq 0.5$ *bar*

** $k_v / k_{VS} \leq 0.5$ *at DN 25 and higher*

*** *Depends on the flow rate and valve* $k_{VS}$ ; $\Delta p_{min} = \left(\frac{Q_{nom}}{k_{vs}}\right)^2 + 0.12(0.14)^{1)}$

1) *Depends on DN*

## Technical data *(continuous)*

### Actuator

| Type | DN | 15 | 20 | 25 | 32 |
|---|---|---|---|---|---|
| Actuator size | $cm^2$ | 8.5 | 13 | 20 | 32 |
| Nominal pressure | PN | 16 | | | |
| Flow restrictor differential pressure (AHQM)<br>Fixed differential pressure setting (AHPBM-F) | bar | 0.12 | | 0.14 | |
| **Materials** | | | | | |
| Housing* | | Dezincing free brass CuZn36Pb2As | | | |
| Diaphragm | | EPDM | | | |
| Impulse tube | | Copper tube Ø 3 × 1 mm | | | |
| | | Stainless steel tube Ø 0.8 × 0.2 × 800 mm | | | |

* *Actuator housing is part of valve body*

## Application principles

*AHPBM-F controller must be installed in the flow pipeline only.*

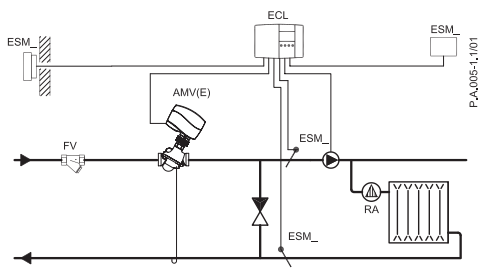


*Direct-connected district heating system* ***with mixing loop only***

## Installation positions

The controllers can be installed in horizontal or vertical pipes with (connection neck for) electrical actuator oriented upwards.

Electrical actuator
***Note!***
Installation positions for electrical actuator AMV(E) have to be observed as well. Please see relevant Data Sheet.

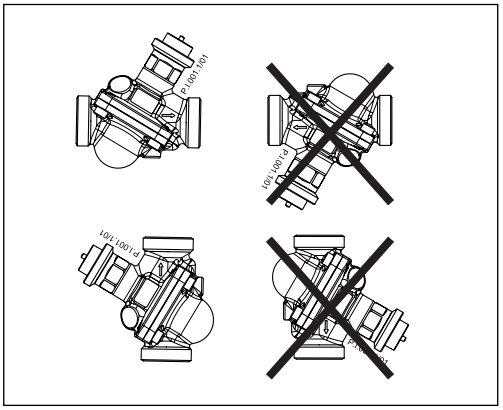

## Pressure temperature diagram

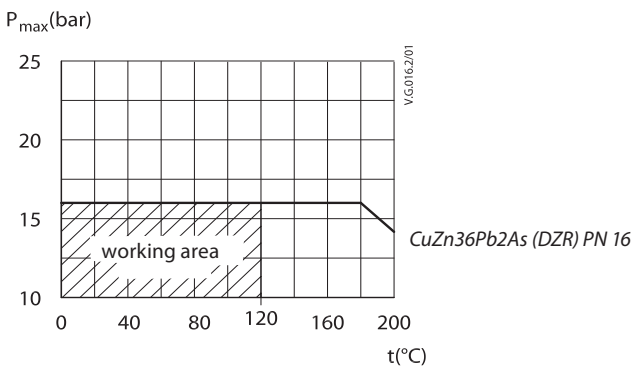


*Maximum allowed operating pressure as a function of medium temperature (according to EN 1092-3).*

## Flow diagram

*Sizing and setting diagram*
Relation between actual flow and number of revolutions on flow restrictor. Values given are approximate.

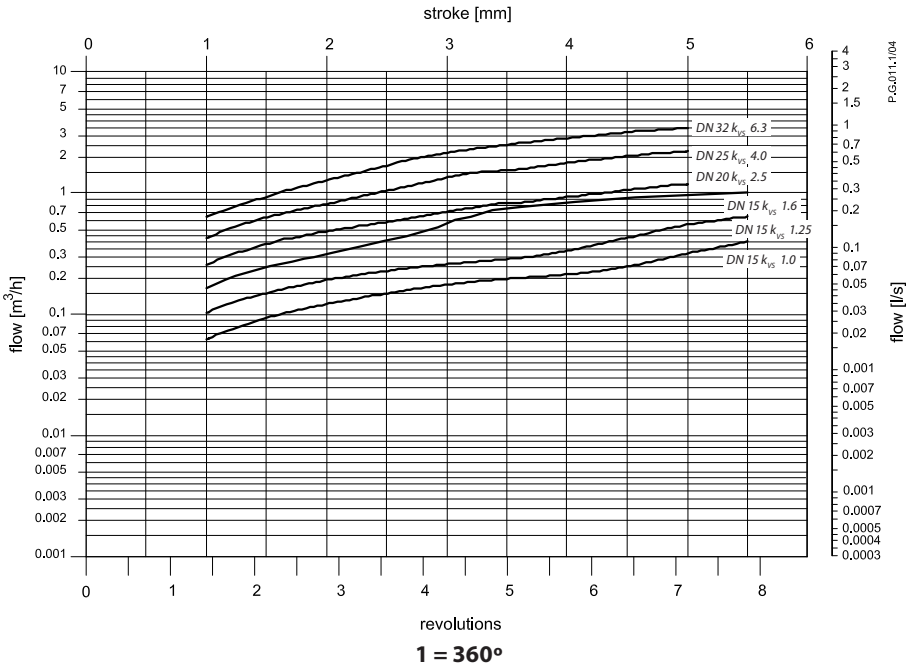


*Flow can be adjusted by turning flow restrictor screw counter-clockwise as shown in this diagram*

*Water flow shown at differential pressure across the controller from 0.5 bar (50 kPa) to 4 bar (400 kPa).*

## Sizing

- *Directly connected heating system*

**Example AHPBM-F**
**(flow mounting only)**

Motorised control valve (MCV) for mixing circuit in direct-connected heating systems requires differential pressure of 0.12 bar (12 kPa) and flow less than 600 l/h.

Given data:

$Q_{max}$ = 0.6 m³/h (600 l/h)
$\Delta p_{min}$ = 0.8 bar (80 kPa)
*$\Delta p_{circuit}$ = 0.1 bar (10 kPa)
$\Delta p_{MCV}$ = 0.12 bar (12 kPa) selected

* Remark:
$\Delta p_{circuit}$ corresponds to the required pump pressure in the heating circuit and is not to be considered when sizing the AHPBM-F.

The total (available) pressure loss across the controller is:

$\Delta p_{AHPBM\text{-}F,A} = \Delta p_{min}$
$\Delta p_{AHPBM\text{-}F,A}$ = 0.8 bar (80 kPa)

Possible pipe pressure losses in tubes, shut-off fittings, heatmeters, etc. are not included.

Select controller from flow diagram, page 5, with the smallest possible $k_{VS}$ value considering available flow ranges.

$k_{VS}$ = 1.6 m³/h

The min. required differential pressure across the selected controller is calculated from the formula:

$$\Delta p_{AHPBM\text{-}F,MIN} = \left(\frac{Q_{max}}{k_{VS}}\right)^2 + \Delta p_{MCV}$$

$$\Delta p_{AHPBM\text{-}F,MIN} = \left(\frac{0.6}{1.6}\right)^2 + 0.12$$

$\Delta p_{AHPBM\text{-}F,MIN}$ = 0.26 bar (26 kPa)

$\Delta p_{AHPBM\text{-}F,A} > \Delta p_{AHPBM\text{-}F,MIN}$

0.8 bar > 0.26 bar

Solution:
The example selects AHPBM-F DN 15, $k_{VS}$ value 1.6, flow setting range 0.06-0.79 m³/h.

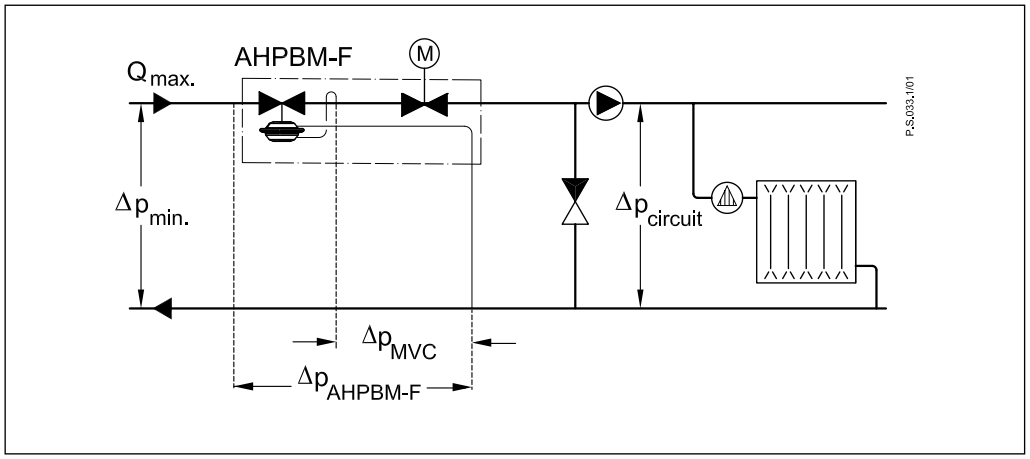

## Design

1. Valve body
2. Control valve insert
3. Adjustable flow restrictor
4. Control valve stem
5. Differential pressure actuator
6. Control diaphragm
7. Built-in spring for flow rate control
8. Pressure relieved valve cone
9. Impulse tube

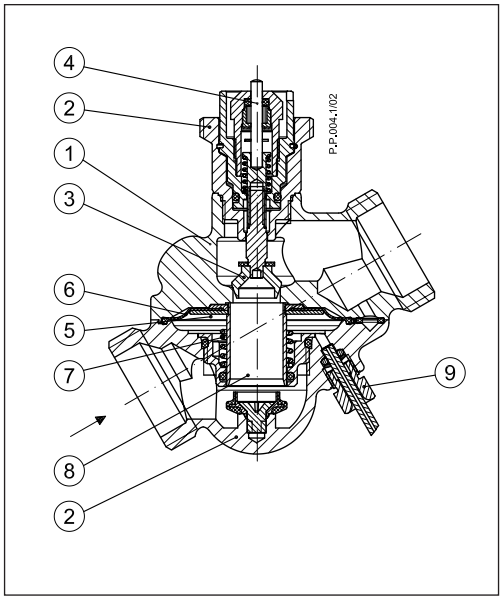


## Function

Pressure changes from the flow and return pipeline are being transferred through the impulse tube and control drain to the actuator chambers and act on control diaphragm. Control valve closes on rising differential pressure and opens on falling differential pressure to maintain constant differential pressure. Flow volume is controlled and limited by means of the flow restrictor.

Additionally the electrical actuator will operate from zero to set max. flow according to the load.

## Settings

*Flow setting*
Flow setting is being done by the adjustment of the flow restrictor position. The adjustment can be performed on the basis of flow adjustment diagram (see relevant instructions) and/or by the means of heat meter.

## Dimensions

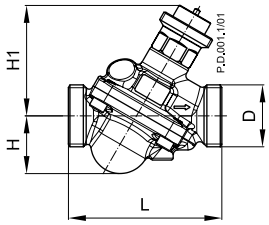


| DN | | 15 | 20 | 25 | 32 |
|---|---|---|---|---|---|
| L | mm | 65 | 82 | 104 | 130 |
| H | | 24 | 31 | 39 | 49 |
| $H_1$ | | 57 | 59 | 72 | 84 |
| D (ISO 228/1) | | G ¾A | G 1A | G 1¼A | G 1¾A |
| Valve weight | kg | 0.51 | 0.67 | 1.47 | 2.23 |

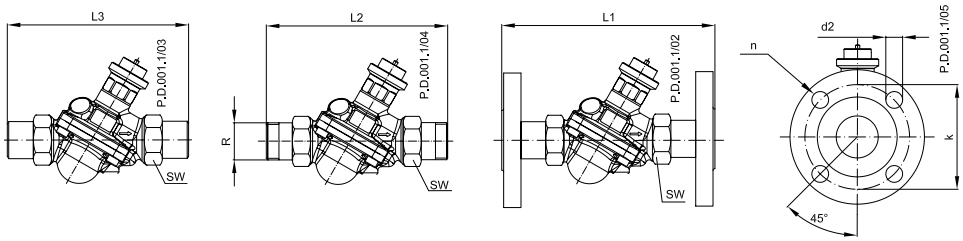


| DN | | 15 | 20 | 25 | 32 |
|---|---|---|---|---|---|
| SW | mm | 32 (G ¾A) | 41 (G 1A) | 50 (G 1¼A) | 63 (G 1¾A) |
| d | | 21 | 26 | 33 | 42 |
| R [1)] | | ½ | ¾ | 1 | 1 ¼ |
| $L_1$ [2)] | | 130 | 150 | 160 | - |
| $L_2$ | | 131 | 144 | 160 | 177 |
| $L_3$ | | 139 | 154 | 159 | 184 |
| k | | 65 | 75 | 85 | - |
| $d_2$ | | 14 | 14 | 14 | - |
| n | | 4 | 4 | 4 | - |

[1)] *Conical ext. thread acc. to EN 10226-1*
[2)] *Flanges PN 25, acc. to EN 1092-2*

Fittings

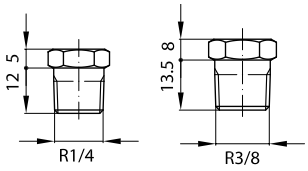

## Dimensions *(continuous)*

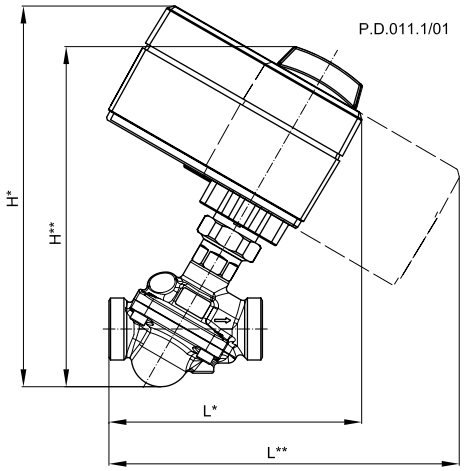


*AMV(E) 10 + AHPBM-F*

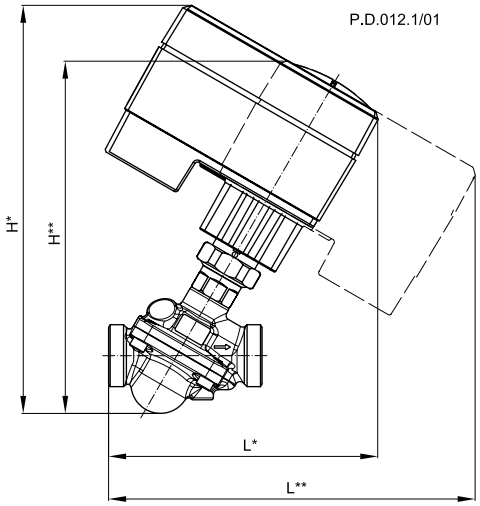


*AMV(E) 13 + AHPBM-F*

| DN | | | 15 | 20 | 25 | 32 |
|---|---|---|---|---|---|---|
| L* | AMV(E) 10 | mm | 137 | 137 | 153 | 172 |
| | AMV(E) 13 | | 147 | 147 | 164 | 183 |
| L** | AMV(E) 10 | | 178 | 186 | 204 | 224 |
| | AMV(E) 13 | | 188 | 196 | 214 | 234 |
| H* | AMV(E) 10 | | 195 | 201 | 223 | 245 |
| | AMV(E) 13 | | 210 | 216 | 238 | 260 |
| H** | AMV(E) 10 | | 174 | 184 | 202 | 222 |
| | AMV(E) 13 | | 180 | 190 | 208 | 228 |

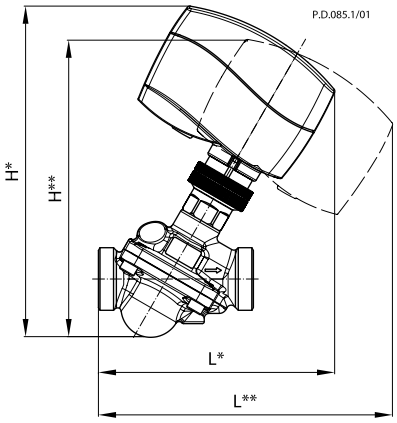


*AMV(E) 130(H)/140(H) + AHPBM-F*

| DN | | 15 | 20 | 25 | 32 |
|---|---|---|---|---|---|
| L* | mm | 118 | 125 | 141 | 160 |
| L** | | 148 | 156 | 174 | 194 |
| H* | | 168 | 178 | 196 | 216 |
| H** | | 152 | 162 | 180 | 200 |

Danfoss can accept no responsibility for possible errors in catalogues, brochures and other printed material. Danfoss reserves the right to alter its products without notice. This also applies to products already on order provided that such alterations can be made without subsequential changes being necessary in specifications already agreed.
All trademarks in this material are property of the respective companies. Danfoss and the Danfoss logotype are trademarks of Danfoss A/S. All rights reserved.

ENGINEERING
TOMORROW

**Data sheet**

# Automatic balancing valves
## ASV-PV DN 50 -100 (3rd gen.)

**Description / Application**

*ASV-PV*
*DN 50*

*ASV-PV*
*DN 65-100*

Partner valve

*MSV-F2*
*DN 50-100*

ASV balancing valves are used for dynamic hydronic balance in heating and cooling systems. One of the major challenges in heating and cooling systems is a lack of good hydronic balancing, caused by differential pressure, which is changing constantly and unpredictably in the system. This often results in complaints about poor indoor comfort, noise and high energy bills.

ASV automatic balancing valves ensure an optimal pressure differential for control valves as well as the correct flow within the individual risers at all times. The ASV automatically creates an optimal hydronic balance within the installation, whether under full or partial load. This balance is never disrupted.

**Flow limitation**
By using combination of pressure controller ASV and settable terminal's unit valve, flow limitation is established.

Flow limitation for each terminal unit prevents underflows on distant units and overflows on others thus allows efficient pumping.

**Lower noise emission**
Differential pressure limitation provides the pressure over the control valve not to increase at partial loads thus noise emission will be lower. (This is the reason why DIN 18380 requires control of differential pressure by partial load.)

**No balancing method needed**
Flow limitation is achieved by adjusting each hydronic loop separately without influencing others, which consequently results in one time adjusting process. No special balancing method is needed so commisioning cost can be saved.

**Control valve authority**
Controlling differential pressure over the control valve means that authority is high – which allows an accurate and stable control as well as energy saving.

**Zone balancing**
By installing the ASV sets you can divide the piping system in pressure independent zones. This allows a gradual connection of zones to the main in new constructions or at renovation without using an additional balancing method. There is no need to perform a new commissioning every time the system is changed because the hydronic balance is done automatically.

ASV-PV valves are settable in different ranges:
- 5-25 kPa setting is mostly used for radiator application,
- 20-40 kPa setting is used for fan coil, chilled beam and flat station applications,
- 35-75 kPa setting is used for flat station and fan coil, chilled beam application,
- 60-100 kPa setting is used for large terminal unit application (air handling units, fan coils, etc.).

Using ASV valves it is possible to optimize pump head while independent pressure zones allow to keep authority of terminal unit's valve high.

ASV balancing valves are designed to guarantee high quality of the automatic balancing by:
- a pressure released cone,
- an adapted membrane for every valve dimension which provide constant quality performance for all sizes,
- spring with linear characteristic that makes setting required Δp easy.

**Description / Application**
(*continuous*)

ASV valves DN 50 is supplied with external thread only. Threaded or weld tail pieces can be supplied as an accessory. Dimensions DN 65-100 are supplied as flanged valves.

ASV balancing valves have integrated service functions such as shut-off.

ASV-PV can be equipped with plug for flow measuring. In that case measuring plugs need to be ordered separately and mounted on the valve as follows:

- on top of drain connection (DN 50),
- on the flange connection before the valve is filled with water (DN 65-100).

ASV-PV valves are to be mounted in return pipe, in combination with partner valves mounted in flow pipe. As a partner valve MSV-F2 is recommended.

There are two basic configurations when using ASV partner valves (MSV-F2):

- partner valve outside the control loop (Fig. 1). Recommended configuration: it results in best performance since whole controlled pressure range is available to the riser. Flow limitation is done on each terminal unit in the riser.

MSV-F2, by connecting impulse tube to down-flow test plug.

- partner valve inside control loop (Fig. 2). Offers flow limitation on the riser however part of the controlled pressure range is used by pressure drop on partner valve ($\Delta p_i$). It is recommended when flow limitation on each terminal units is not possible.

MSV-F2, by connecting impulse tube to up-flow test plug.

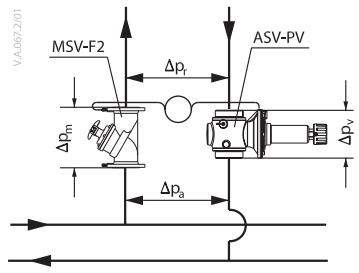


*Fig. 1 Setting of ASV-PV = Δpriser*

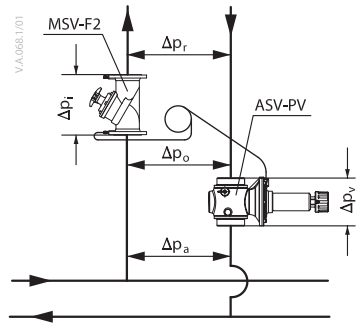


*Fig. 2 Setting of ASV-PV = Δpriser + Δpi*

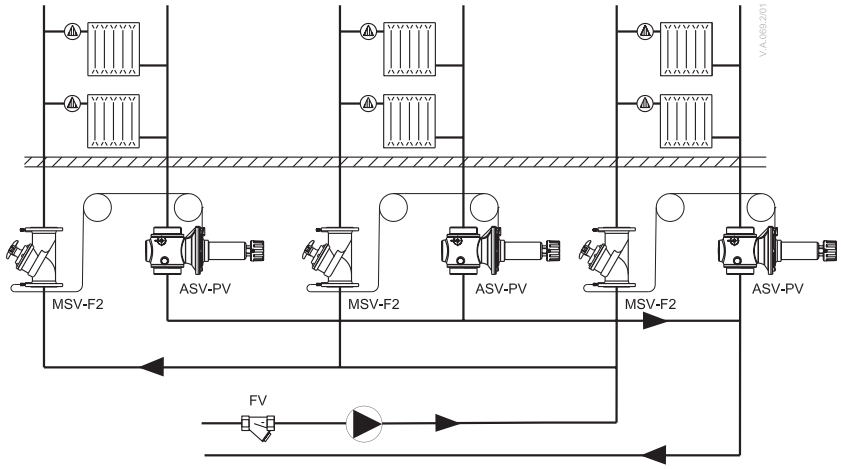


*Fig. 3 ASV in riser / typical heating application (general example)*

ASV valves are to be used in heating systems to control the differential pressure in risers. To limit the flow for every radiator, the thermostatic radiator valve with pre-setting facilities (feature) is used together with a constant pressure provided by the ASV, thus providing balanced heat distribution.

Controlling differential pressure over the riser means also that the valve authority over the thermostatic radiator valves is high – which allows an accurate and stable temperature control and saves energy.

 © Danfoss | 2019.04

**Description / Application**
(*continuous*)

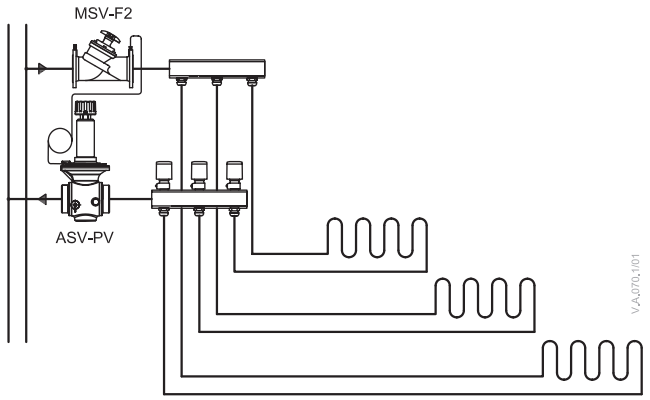


*Fig. 4 ASV in manifold for floor heating system*

ASV valves are to be used in floor heating systems. To limit the flow for every loop valves with an integrated flow limiting or presetting function should be used together with a constant pressure provided by an ASV-PV valve.

ASV-PV valves can control the differential pressure in several ranges if different pressure is needed.

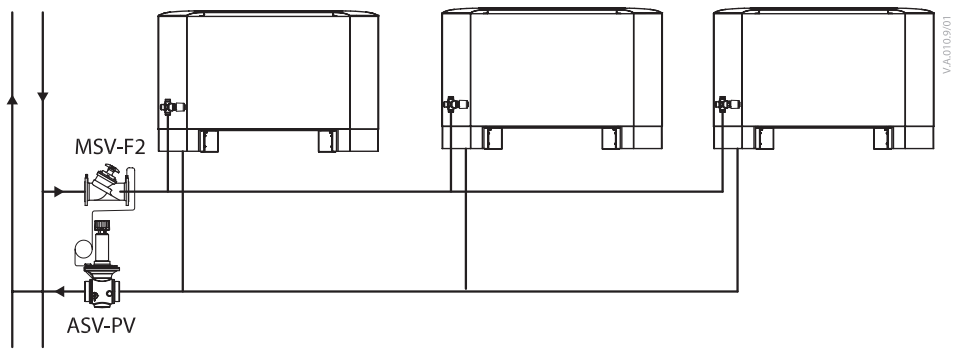


*Fig. 5 ASV with fan coil*

The ASV valves are to be used in systems with fan coils, induction devices and air-heaters to secure an automatic hydronic balance by the means of differential pressure control in branches or at every coil.

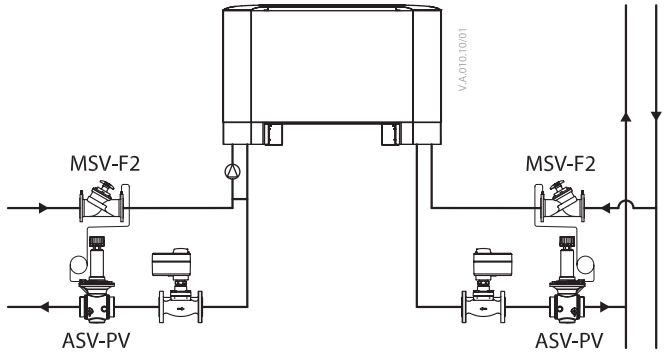


*Fig. 6 ASV with air handling unit*

The ASV valves are to be used in air handling units to secure an automatic hydronic balance by the means of differential pressure control at every unit.

## Sizing

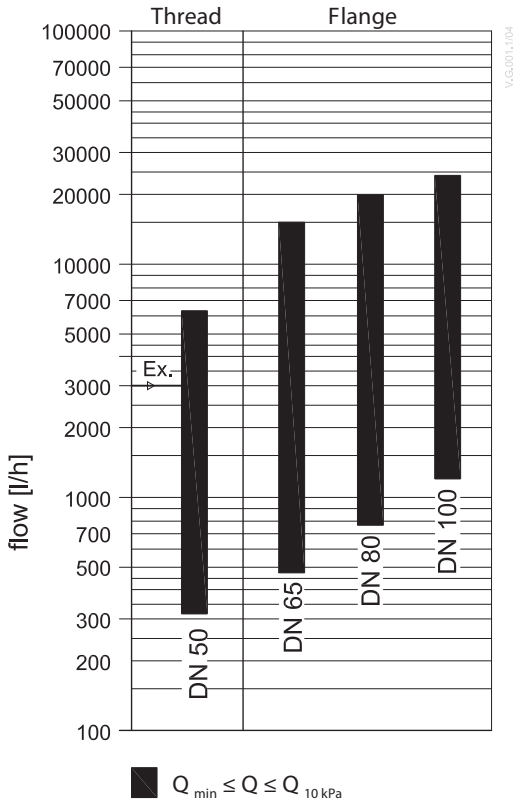


*Fig. 7 Column diagram for sizing ASV valves at $\Delta p_v$ = 10 kPa. For different $\Delta p_v$ values use diagram A in Appendix.*

We recommend to size the diameter of ASV-PV valves by using Fig 7. Maximum flow rates are based on 10 kPa differential pressure over the valve which allows effcient pumping and saves energy.

After ASV-PV valves have been sized the same dimension of partner valve MSV-F2 valve should be selected.

**Example:**

*Given*:
Pipe flow 3000 l/h, pipes DN 50

*Solution*:
Horizontal line intersects the column for the valve DN 50 which can therefore be selected as required size.

For detailed sizing see examples on pages 9. For different $\Delta p_v$ (differential pressure over the valve) see diagrams in Appendix A.

**Connection between valves size and pipe size**
$K_v$ values per particular dimension were designed to cover flow range according to VDI 2073 with water velocity of up 0.8 m/s, at differential pressure of 10 kPa over the valve. As long as the water velocity in the pipe is between 0.3 and 0.8 m/s dimension of the valve should be equal to pipe dimension.

This rule is derived out of the fact that $K_v$ values per particular dimension were designed to cover flow range according to VDI 2073 at differential pressure of 10 kPa over the valve.


© Danfoss | 2019.04

## Ordering

**ASV-PV** balancing valve, inclusive in the box:
2.5 m impulse tube (G 1/16 A) drain connection (G 3/4 A) and adapter **003L8151**

| Type | DN | $k_{vs}$ (m³/h) | Connection | | Δp setting range (kPa) | Code No. |
|---|---|---|---|---|---|---|
| 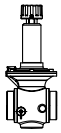 | 50 | 20 | External thread ISO 228/1 | G 2 1/2 | 5-25 | **003Z0611** |
| | | | | | 20-40 | **003Z0621** |
| | | | | | 35-75 | **003Z0631** |
| | | | | | 60-100 | **003Z0641** |

**ASV-PV** balancing valve, inclusive in the box:
2.5 m impulse tube (G 1/16 A), adapter ASV large **003Z0691** and **003L8151**

| Type | DN | $k_{vs}$ (m³/h) | Connection | Δp setting range (kPa) | Code No. |
|---|---|---|---|---|---|
| 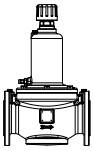 | 65 | 48 | Flange EN 1092-2 | 20-40 | **003Z0623** |
| | 80 | 63 | | | **003Z0624** |
| | 100 | 76.0 | | | **003Z0625** |
| | 65 | 48 | | 35-75 | **003Z0633** |
| | 80 | 63 | | | **003Z0634** |
| | 100 | 76.0 | | | **003Z0635** |
| | 65 | 48 | | 60-100 | **003Z0643** |
| | 80 | 63 | | | **003Z0644** |
| | 100 | 76.0 | | | **003Z0645** |

**MSV-F2** Partner valve with shut-off, flowlimitation and test plugs. [1)]

| Type | DN | $k_{vs}$ (m³/h) | $T_{MAX.}$ (°C) | DN20 (bar) | Code No. |
|---|---|---|---|---|---|
| 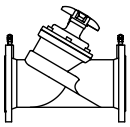 | 15 | 3.1 | 130 | 16 | **003Z1085** |
| | 20 | 6.3 | | | **003Z1086** |
| | 25 | 9.0 | | | **003Z1087** |
| | 32 | 15.5 | | | **003Z1088** |
| | 40 | 32.3 | | | **003Z1089** |
| | 50 | 53.8 | | | **003Z1061** |
| | 65 | 93.4 | | | **003Z1062** |
| | 80 | 122.3 | | | **003Z1063** |
| | 100 | 200.0 | | | **003Z1064** |

[1)] *For more information see MSV-F2 datasheeet*

### Accessories and spare parts

| Description | Comments/connection | Code No. |
|---|---|---|
| Shut off knob for MSV-F2 | DN 50 | **003Z0179** |
| | DN 65-100 | **003Z0180** |
| Differential pressure measuring connector | For drain connection | **003L8143** |
| Impulse tube, with O-rings | 1.5 m | **003L8152** |
| | 2.5 m | **003Z0690** |
| | 5 m | **003L8153** |
| Plastic impulse tube with connectors and adapters | For making set of 10 pieces [4)] | **003Z0689** |
| Adapter large ASV [1)] | G ¼-R ¼; G 1/16 | **003Z0691** |
| Plug for connecting impulse tube [2)] | G 1/16-R ¼ | **003L8151** |
| O-ring for impulse tube [3)] | 2.90 × 1.78 | **003L8175** |

[1)] *Recommended for use with MSV-F2, connected to measuring hole, it allows connection of impulse tube from ASV while retaining measurement functionality.*
[2)] *Recommended for use with MSV-F2, connected to measuring hole. Can also be used for connecting impulse tube directly on the pipe.*
[3)] *Set of 10 pieces.*
[4)] *Total 15 meter of impulse tube*

### Fitting

For valves with external thread Danfoss offers threaded or welded tailpieces as accessory.

| Materials | |
|---|---|
| Nut | brass |
| Tailpiece welding | steel |
| Tailpiece threaded | brass |

| Type | Comment | to pipe | to valve | Code No. |
|---|---|---|---|---|
| | Tailpiece threaded (1 pcs.) | R2 | DN 50 (2 ¼") | **003Z0274** |
| | | | DN 50 (2 ½") | **003Z0278** |
| | Tailpiece welding (1 pcs.) | DN 50 | DN 50 (2 ¼") | **003Z0272** |
| | | | DN 50 (2 ½") | **003Z0276** |

## Technical data

| Type | | ASV-PV | MSV-F2[1] |
|---|---|---|---|
| Nominal diameter | DN | 50-100 | 50-100 |
| Max. pressure | bar | 16 (PN 16) | 16 (PN 16) |
| Test pressure | | 25 | 25 |
| Differential pressure over the valve | kPa | 10-250 [2] | 10-150 |
| Temperature | °C | –10 … 120 | -10 … 130 |
| **Material of parts in contact with water** | | | |
| Valve body | | Grey cast iron EN-GJL-250 (GG 25) | Cast iron EN-GJL 250 (GG 25) |
| Cone | | Stainless steel | CW602N |
| Membrane / O-rings | | EPDM | |
| Spring | | Stainless steel | - |

[1] *For more information see MSV-F2 datasheet.*
[2] *Please note that the maximum admissible differential pressure across the valve 250 kPa should also not be exceeded at partial load.*

## Design

1. Shut-off knob
2. Differential pressure setting spindle
3. O-ring
4. Reference spring
5. Impulse tube connection
6. Diaphragm element
7. Control diaphragm
8. Pressure-relieved valve cone
9. Valve body
10. Seat

| n (turns) | 5-25 (kPa) | 20-40 (kPa) | 35-75 (kPa) | 60-100 (kPa) |
|---|---|---|---|---|
| 0 | 25 | 40 | 75 | 100 |
| 1 | 24 | 39 | 73 | 98 |
| 2 | 23 | 38 | 71 | 96 |
| 3 | 22 | 37 | 69 | 94 |
| 4 | 21 | 36 | 67 | 92 |
| 5 | 20 | 35 | 65 | 90 |
| 6 | 19 | 34 | 63 | 88 |
| 7 | 18 | 33 | 61 | 86 |
| 8 | 17 | 32 | 59 | 84 |
| 9 | 16 | 31 | 57 | 82 |
| 10 | 15 | 30 | 55 | 80 |
| 11 | 14 | 29 | 53 | 78 |
| 12 | 13 | 28 | 51 | 76 |
| 13 | 12 | 27 | 49 | 74 |
| 14 | 11 | 26 | 47 | 72 |
| 15 | 10 | 25 | 45 | 70 |
| 16 | 9 | 24 | 43 | 68 |
| 17 | 8 | 23 | 41 | 66 |
| 18 | 7 | 22 | 39 | 64 |
| 19 | 6 | 21 | 37 | 62 |
| 20 | 5 | 20 | 35 | 60 |

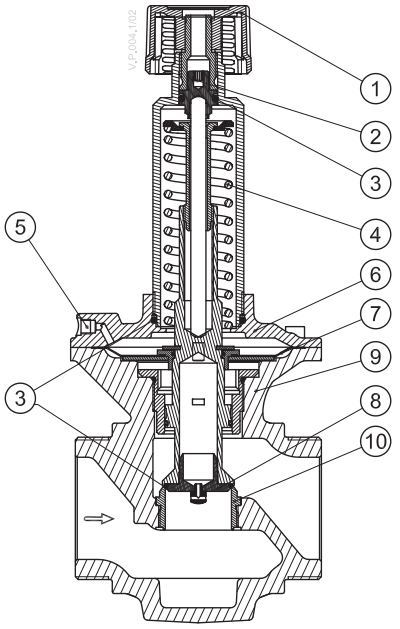


***Factory presetting***

| Δp setting range (kPa) | kPa |
|---|---|
| 5-25 | 10 |
| 20-40 | 30 |
| 35-75 | 60 |
| 60-100 | 80 |

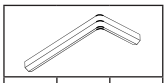

| DN | 50 | 5 |
|---|---|---|

*Fig. 8 ASV-PV (DN 50)*

ASV-PV is designed to maintain a constant set differential pressure. Via an internal connection and together with the reference spring (4), pressure in the return pipe acts on the underside of the control diaphragm (7) while via an impulse tube (5), pressure in the flow pipe acts on the top of the diaphragm. In this way the balancing valve maintains adjusted differential pressure.

The ASV-PV valves are sold in four different Δp setting ranges. The valves are factory–set to a defined value as described on Factory presseting table on Fig. 8 and 9.

Use the following procedure to set the desired differential presure:
the setting on ASV-PV can be changed by turning the setting spindle (2).
Turning the spindle clockwise increases the setting; turning it counter clockwise reduces the setting.

If the setting is not known, turn the spindle fully clockwise. With this the setting on ASV-PV is at maximum value within setting range. Now turn the spindle a number of times (n) as described in Fig. 6, 7 or 8 until the required differential pressure setting is obtained.


© Danfoss | 2019.04

## Design *(continuous)*

1. Shut-off knob
2. Differential pressure setting spindle
3. O-ring
4. Flat gasket
5. Reference spring
6. Impulse tube connection
7. Diaphragm element
8. Control diaphragm
9. Pressure-relieved valve cone
10. Valve body
11. Seat
12. Measuring holes-plugged
13. Air-vent

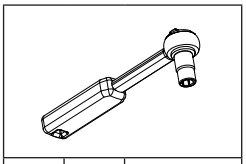

| | | |
|---|---|---|
| DN | 65 | 13 |
| | 80 | 13 |
| | 100 | 13 |

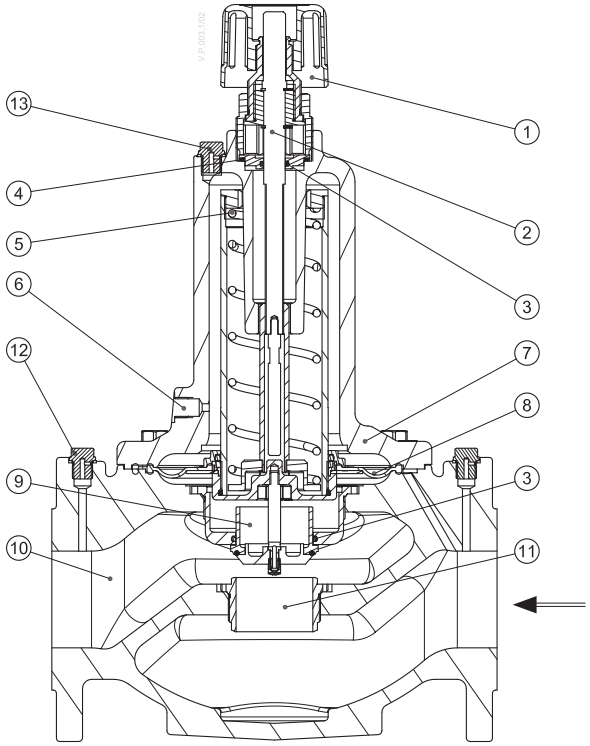


***Factory presetting***

| Δp setting range (kPa) | kPa |
|---|---|
| 20-40 | 30 |
| 35-75 | 60 |
| 60-100 | 80 |

| n (turns) | 20-40 (kPa) | 35-75 (kPa) | 60-100 (kPa) |
|---|---|---|---|
| 0 | 40 | 75 | 100 |
| 1 | 39 | 74 | 99 |
| 2 | 38 | 73 | 98 |
| 3 | 37 | 72 | 97 |
| 4 | 36 | 71 | 96 |
| 5 | 35 | 70 | 95 |
| 6 | 34 | 69 | 94 |
| 7 | 33 | 68 | 93 |
| 8 | 32 | 67 | 92 |
| 9 | 31 | 66 | 91 |
| 10 | 30 | 65 | 90 |
| 11 | 29 | 64 | 89 |
| 12 | 28 | 63 | 88 |
| 13 | 27 | 62 | 87 |
| 14 | 26 | 61 | 86 |
| 15 | 25 | 60 | 85 |
| 16 | 24 | 59 | 84 |
| 17 | 23 | 58 | 83 |
| 18 | 22 | 57 | 82 |
| 19 | 21 | 56 | 81 |
| 20 | 20 | 55 | 80 |

| n (turns) | 20-40 (kPa) | 35-75 (kPa) | 60-100 (kPa) |
|---|---|---|---|
| 21 | | 54 | 79 |
| 22 | | 53 | 78 |
| 23 | | 52 | 77 |
| 24 | | 51 | 76 |
| 25 | | 50 | 75 |
| 26 | | 49 | 74 |
| 27 | | 48 | 73 |
| 28 | | 47 | 72 |
| 29 | | 46 | 71 |
| 30 | | 45 | 70 |
| 31 | | 44 | 69 |
| 32 | | 43 | 68 |
| 33 | | 42 | 67 |
| 34 | | 41 | 66 |
| 35 | | 40 | 65 |
| 36 | | 39 | 64 |
| 37 | | 38 | 63 |
| 38 | | 37 | 62 |
| 39 | | 36 | 61 |
| 40 | | 35 | 60 |

*Fig. 9 ASV-PV (DN 65-100)*

**Design** *(continuous)*

1. Body EN-GJL250
2. Plug
3. Valve cone
3.1 . Seat soft sealing
4. Rod
5. Stroke limiter/Allen screw
6. Gasket
7. Handwheel with display - DN 50-100 plastic
8. Fixed screw
9. Spindle
10. Stuffing box
11. Bonnet
12. Allen screw /Hexagon screw
13. Flat gasket

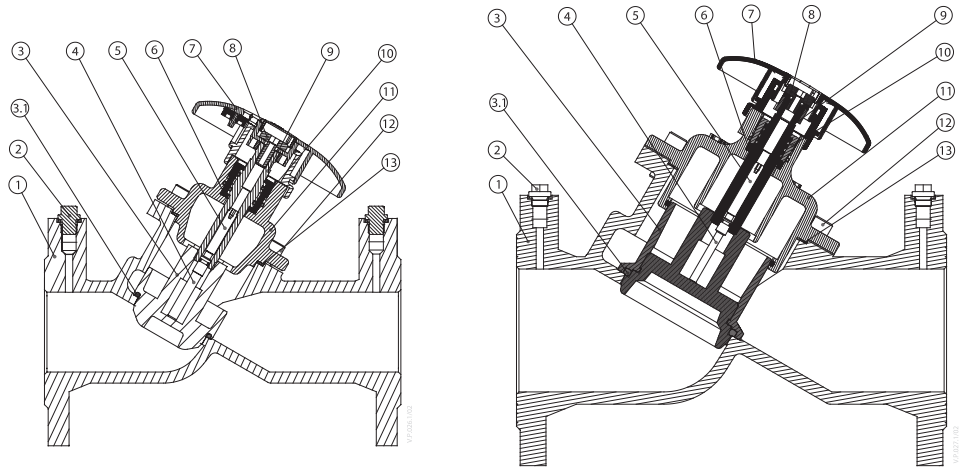


*MSV-F2 DN 50-80* *MSV-F2 DN 100*

*Fig. 10 MSV-F2 DN 50-100*

**Partner valves** MSV-F2 [1] are to be used together with the automatic balancing valves ASV-PV to control differential pressure in the risers.

**Impulse tube connection**
The impulse line must be connected to impulse tube connection piece (2) (adaptor sold as accessory). In working position,
one of test plugs needs to be open while other closed. There are two possible configurations, with partner valve inside or outside control loop. It can be chosen by impulse tube connection side:

- Partner valve outside controlled loop: opened outlet test plug
- Partner valve inside controlled loop: opened inlet test plug

**MSV-F2** is manual presetting and shut-off valves. The valves have position indicator and stroke limiter as standard. Hood of spindle is integrated with stroke limiter. Setting can be locked.

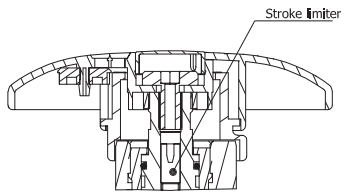


*Valves have built in flow limitation*

[1] *For more information see MSV-F2 datasheet*

 © Danfoss | 2019.04

## Sizing-design examples

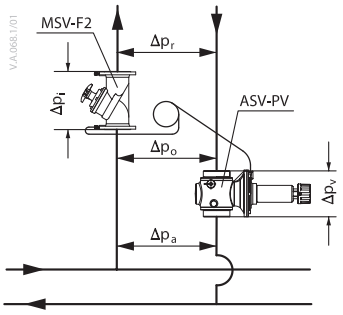


$$\Delta p_a = \Delta p_m + \Delta p_r + \Delta p_v$$

| | |
|---|---|
| $\Delta p_v$ | *Pressure drop across ASV-PV valve* |
| $\Delta p_i$ | *Pressure drop across MSV-F2* |
| $\Delta p_o$ | *Pressure drop across the riser including MSV-F2* |
| $\Delta p_a$ | *Pressure drop across the riser* |
| $\Delta p_r$ | *Pressure drop in the riser excluding MSV-F2* |

*Fig. 11*

### 1. Example (AHU - air handling unit)

*Given*:
Desired flow for the riser (Q):.....15 $m^3/h$
Minimal available pressure
for that riser ($\Delta p_a$).....100 kPa
Estimated pressure drop over the riser
at the desired flow ($\Delta p_0$).....40 kPa

*Wanted:*
- Valve type
- Valve size

Selection and sizing of automatic balancing valves for air handling unit. The customer have choosen ASV-PV with partner valve MSV-F2 inside the control loop is choosen. Since the calculated pressure drop over the riser is 40 kPa ASV-PV with setting range between 35-75 kPa is selected. The minimal available pressure for the riser is 100 kPa and pressure drop across ASV-PV (Δpv) will following be 60 Kpa

$$\Delta p_v = \Delta p_a - \Delta p_0 = 100 - 40 = 60 \text{ kPa}$$

$$k_{v=} \frac{Q}{\sqrt{\Delta p_v}} = \frac{15}{\sqrt{0.6}} = 19.36 \ m^3/h$$

Based on this calculation ASV-PV DN 65 is selected with partner valve MSV-F2 also DN65. Set the valve to 40 kPa, see figure 11 (40kPa = 35 turns). Selection can also be made by reading from diagram Appendix A. fig A

### 2. Example (continued AHU - air handling unit)

*Given*:
Correcting the flow with the differential pressure setting.

Desired flow for the riser ($Q_2$): .....15 $m^3/h$
Measured flow for the riser ($Q_1$) .....18 $m^3/h$

Estimated pressure drop over the
riser at desired flow ($\Delta p_r$) ..... 40 kPa

*Required:*
Correct flow to 15 $m^3/h$ for the riser.

*Solution:*
Measuring the flow show that it is higher then what is desired for the riser, this could be caused by the real pressure drop over the riser is higher than the estimated 40 kPa, following setting on the ASV-PV valve can be adjusted to limit the flow.

$$P_2 = P_1 \times \left(\frac{Q_2}{Q_1}\right)^2 = 40 \times \left(\frac{15}{18}\right)^2 = 28 \text{ kPa}$$

If we decrease the setting from 40 to 28 kPa flow will be decreased to 15 $m^3/h$.

Alternatively, flow limitation inside the loop can also be done with MSV-F2 by adjusting the setting of the valve.

**Measurement of flow and differential pressure**

MSV-F2 is equipped with two test plugs so that the differential pressure across the valve can be measured using Danfoss measuring equipment or any other measuring device. Valve can be converted to actual flow.

***Note:*** *When measuring sized flow, all radiator valves must be fully open (nominal flow).*

**Measurement of differential pressure ($\Delta p_r$) across riser.**
Fit a measuring connector (Danfoss code no. **003L8143**) on the ASV-PV balancing valve drain connection (DN 50) or threaded connection closer to the terminal unit (TU). Measurements must be taken between the test plug at MSV-F2 valve port B and the measuring connector on the ASV-PV.

**Installation**

ASV-PV must be installed in the return pipe with flow in the direction of the arrow on thevalve body. Partner valves (MSV-F2) must be installed in the flow pipe, with flow in the direction of the arrow on the valve body. The impulse tube must be installed between partner valve and ASV-PV.

The impulse tube must be flushed through before installation. ASV-PV and MSV-F2 must in addition be installed as determined by installation conditions.

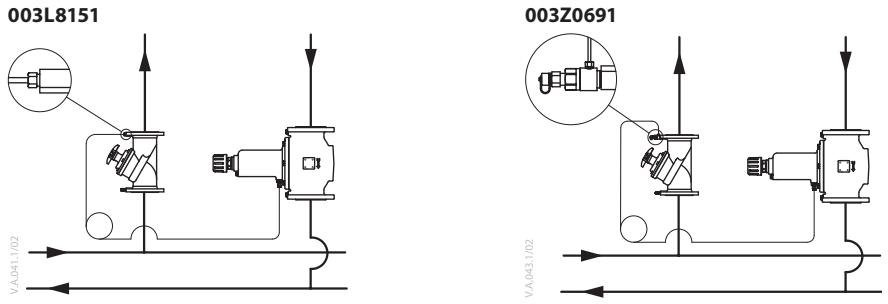


*Fig. 13*

**Pressure testing**

Max. test pressure ..... 25 bar

When pressure testing the system you must secure that both sides of the membrane have the same static pressure to prevent damage of the pressure controller. That means the impulse tube must be connected and any needle valves must be open.

**Starting**

During system start – opening the shut-off on ASV-PV and partner valve-please secure that there is the same static pressure on both sides or higher pressure on upper side of the membrane. If filling is done by opening ASV-PV and partner valve, please make sure there is a pressure on the upper side of the membrane by opening partner valve first before ASV-PV is opened.


© Danfoss | 2019.04

## Dimensions

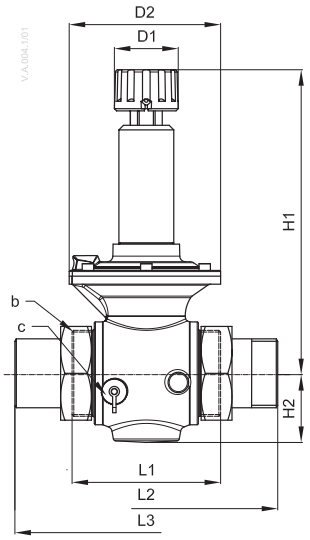


### *ASV-PV*

| DN | Δp setting range | L1 | L2 | L3 | H1 | H2 | D1 | D2 | b | c |
|---|---|---|---|---|---|---|---|---|---|---|
| | kPa | mm | | | | | | | ISO 228/1 | |
| 50 | 5-25 | 130 | 244 | 234 | 232 | 61 | 55 | 133 | G 2½ | G ¾ A |
| | 20-40 | | | | | | | | | |
| | 35-75 | | | | 273 | | | | | |
| | 60-100 | | | | | | | | | |

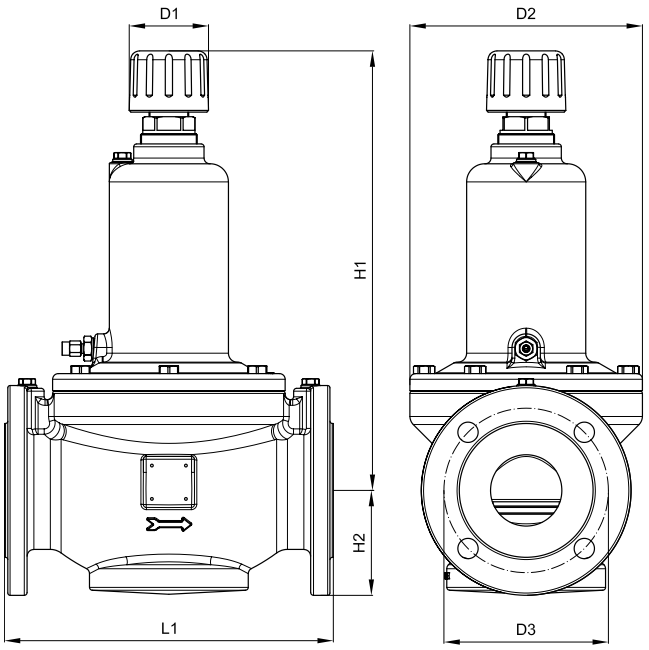


### *ASV-PV*

| DN | L1 | H1 | H2 | D1 | D2 | D3 |
|---|---|---|---|---|---|---|
| | mm | | | | | |
| 65 | 290 | 385 | 93 | 68 | 205 | 145 |
| 80 | 310 | 390 | 100 | 68 | 218 | 160 |
| 100 | 347 | 446 | 112 | 68 | 248 | 180 |

*Fig. 14*

**Appendix A-***Sizing diagram*

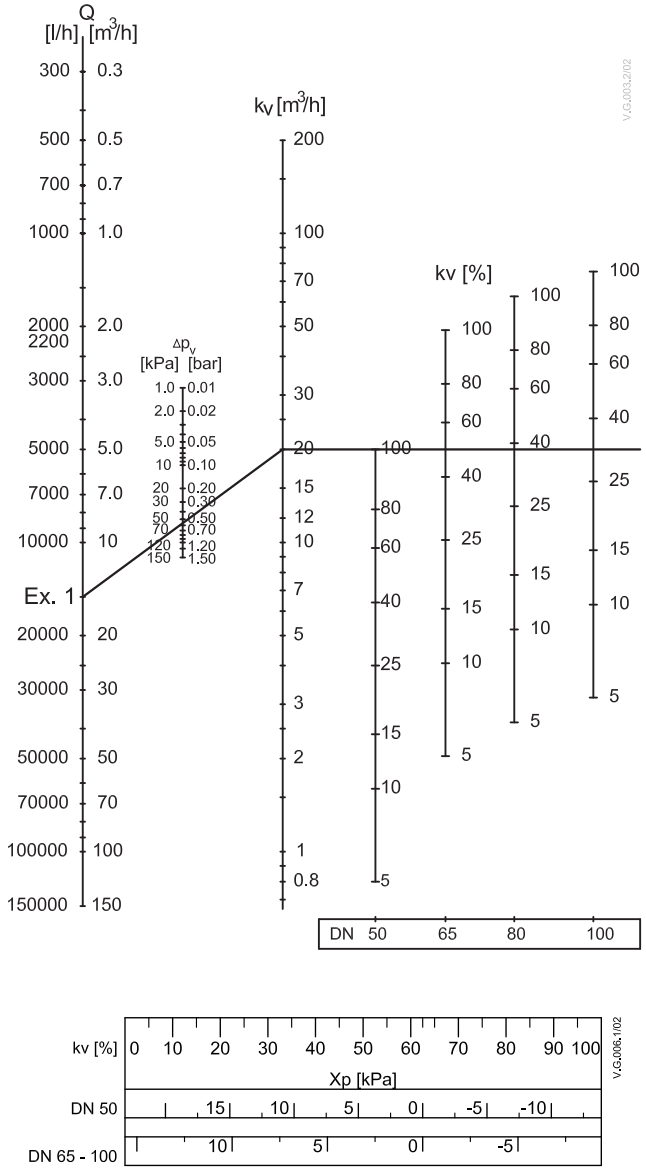


***Fig. A*** Sizing diagram ASV-PV DN 50-100


© Danfoss | 2019.04

**Appendix A-***Sizing diagram*

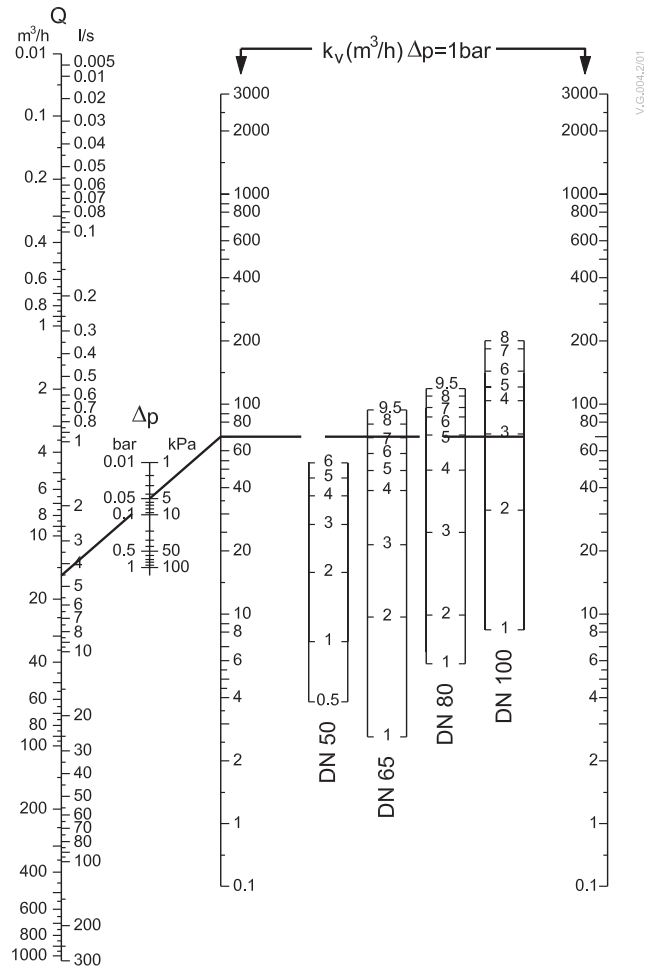


***Fig.B** -Sizing diagram MSV-F2 DN 50-100*

**Appendix B**
*MSV-F Flow diagrams*

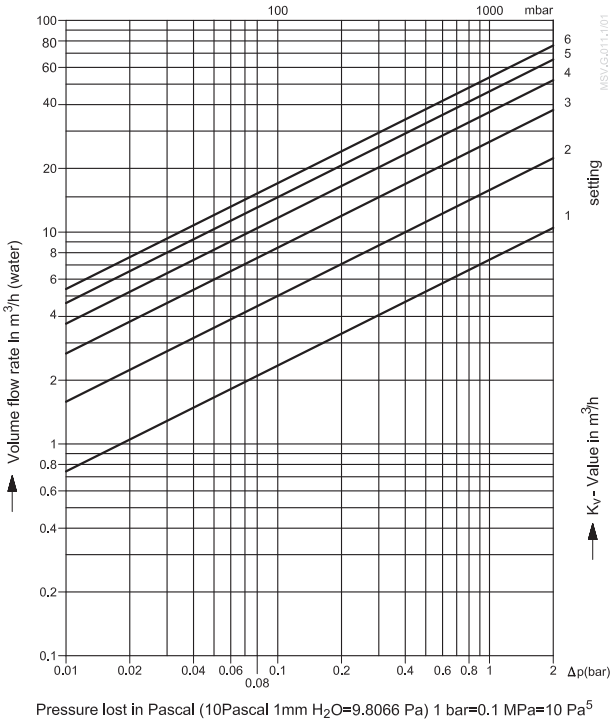


*DN 50 / PN 16 / PN 25*

| Setting | $k_v$-value |
|---|---|
| 1 | 7.4 |
| 2 | 15.8 |
| 3 | 26.7 |
| 4 | 36.9 |
| 5 | 46.2 |
| 6 | 53.8 |

Max. permissible differential pressure in throttling function 1.5 /2.0 bar.
Max. permissible flow speed: ≤ 4 m/s
Condition:

- The flow must be free of cavitation.

**Flow characteristic**

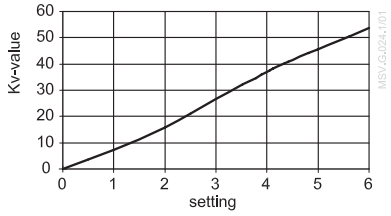

**Appendix B** *(continued)*
*MSV-F Flow diagrams*

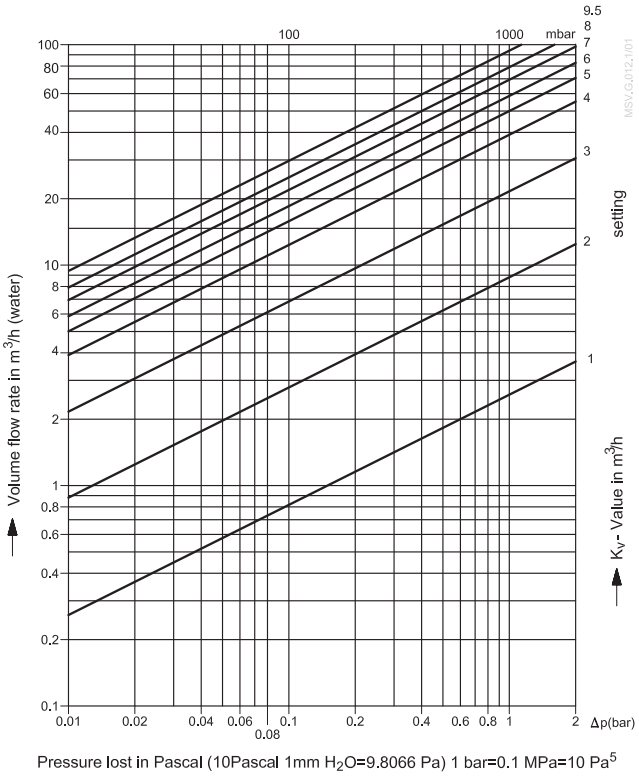


*DN 65 / PN 16 / PN 25*

| Setting | $k_v$-value |
|---|---|
| 1 | 2.6 |
| 2 | 8.8 |
| 3 | 21.6 |
| 4 | 39.0 |
| 5 | 49.8 |
| 6 | 58.5 |
| 7 | 69.3 |
| 8 | 79.0 |
| 9 | 87.8 |
| 9.5 | 93.4 |

Max. permissible differential pressure in throttling function 1.5 /2.0 bar.
Max. permissible flow speed: ≤ 4 m/s
Condition:
- The flow must be free of cavitation.

**Flow characteristic**

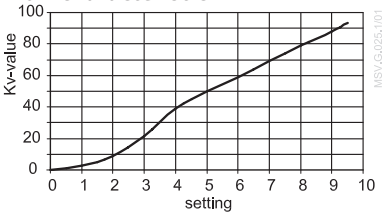


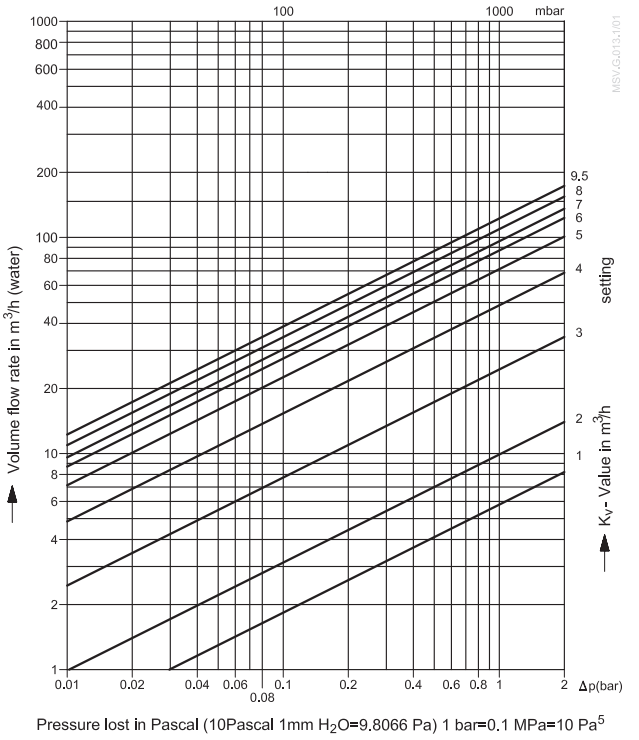


*DN 80 / PN 16 / PN 25*

| Setting | $k_v$-value |
|---|---|
| 1 | 5.8 |
| 2 | 9.9 |
| 3 | 24.5 |
| 4 | 48.5 |
| 5 | 71.3 |
| 6 | 87.0 |
| 7 | 96.4 |
| 8 | 109.3 |
| 9.5 | 122.3 |

Max. permissible differential pressure in throttling function 1.5 /2.0 bar.
Max. permissible flow speed: ≤ 4 m/s
Condition:
- The flow must be free of cavitation.

**Flow characteristic**

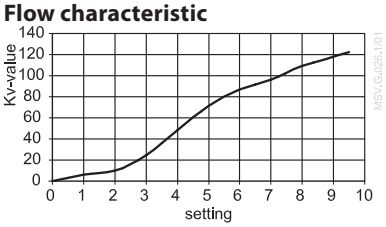


 © Danfoss | 2019.04

**Appendix B** *(continued)*
*MSV-F Flow diagrams*

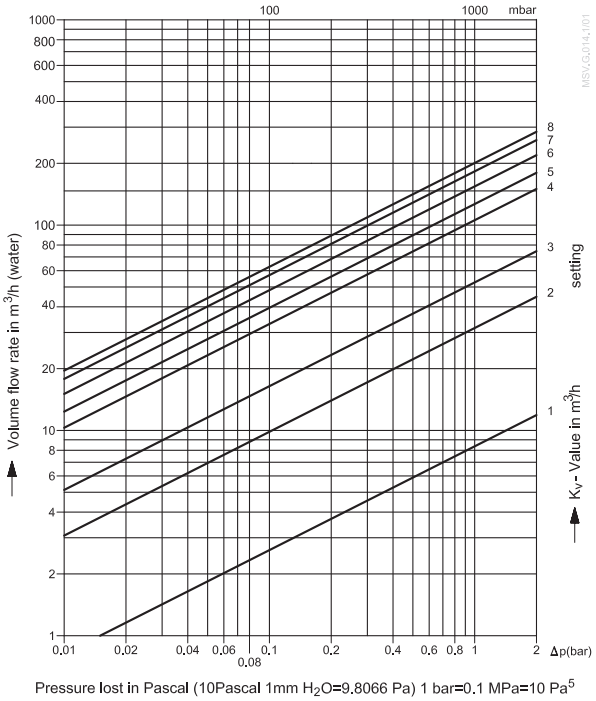


*DN 100 / PN 16 / PN 25*

| Setting | $k_v$-value |
|---|---|
| 1 | 8.3 |
| 2 | 32.4 |
| 3 | 72.9 |
| 4 | 107.2 |
| 5 | 128.2 |
| 6 | 152.8 |
| 7 | 180.0 |
| 8 | 200.0 |

Max. permissible differential pressure in throttling function 1.5 /2.0 bar.
Max. permissible flow speed: ≤ 4 m/s
Condition:

- The flow must be free of cavitation.

**Flow characteristic**

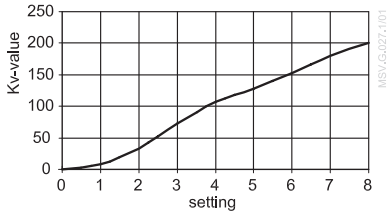

**ASV-PV tender text**

**1. Tender text**

a. Product is differential pressure controller for automatic hydronic balance of heating and cooling systems.
b. The differential pressure controller should be based on integrated membrane element.
c. Valves should have shut-off function separated from the setting mechanism. Shut-off service function should be possible with a hand knob.
d. The setting of differential pressure should be hidden to prevent unauthorized change of setting.
e. The differential pressure setting should be linear throughout the setting range (1 turn 1 kPa or 1 turn 2 kPa depending on dimension).
f. Packaging of differential pressure controller should contain impulse tube (1.5 m)
g. Valve should be delivered in reliable packaging for safe transport and handling.

**2. Product characteristics:**

a. Pressure class: PN 16
b. Temperature range: –10 … +120 °C.
c. Connection size: DN 50-100
d. Connection type (depending on dp setting range): External thread ISO 228/1 (DN15-50) and Flange EN 1092-2 (DN 65-100)
e. Δp setting range: 5-25 kPa (DN 50), 20-40 kPa (DN 50-100), 35-75 kPa (DN 50-100) and 60-100 kPa (DN 65-100).
f. Installation: differential pressure controller should mounted on return pipe with connection via impulse tube to supply pipe.

| | |
|---|---|
| Nominal diameter: | _ _ _ _ _ _ |
| Connection: | _ _ _ _ _ _ |
| Adjustment range from-to: | _ _ _ _ _ _ kPa |
| Produced by: Danfoss Type: | ASV-PV |
| Ordering no.: | **003L**_ _ _ |

Danfoss can accept no responsibility for possible errors in catalogues, brochures and other printed material. Danfoss reserves the right to alter its products without notice. This also applies to products already on order provided that such alterations can be made without subsequential changes being necessary in specifications already agreed.
All trademarks in this material are property of the respective companies. Danfoss and the Danfoss logotype are trademarks of Danfoss A/S. All rights reserved.

ENGINEERING
**TOMORROW**

**Data sheet**

# Automatic balancing valve ASV-P (DN 15-40)

## Description

ASV-P valves are automatic balancing valves with fixed setting (10 kPa) for creating optimal hydronic balance in residential heating systems.

The setting can be increased to 20 or 30 kPa by spring replacement. Spring can be replaced under pressure.

ASV balancing valves are designed to guarantee high quality of the automatic balancing by:
- a pressure released cone,
- an adapted membrane for every valve dimension which provide constant quality performance for all sizes.

A 90° angle between all service features (shut-off, draining, measuring) allows an easy access under any installing condition.

ASV valves (DN 15-40) are packaged in styropore (EPS) which can be used for insulation at temperatures up to 80 °C. An insulation cap is available as an accessory for insulation at higher temperatures (up to 120 °C).

ASV-P valves are to be mounted in return pipe, in combination with partner valves mounted in flow pipe. As a partner valve ASV-M/I/BD are recommended.

## Ordering

ASV-P balancing valve, inclusive in the box: 1.5 m impulse tube (G 1/16 A) and drain cock (G ¾ A)
Constant differential pressure 10 kPa ; **can be upgraded to 20 or 30 kPa setting respectively**

| Type | DN | $k_{VS}$ ($m^3/h$) | Internal thread (ISO 7/1) | Code No. | Type | External thread (ISO 228/1) | Code No. |
|---|---|---|---|---|---|---|---|
| | 15 | 1.6 | Rp ½ | 003L7621 | | G ¾ A | 003L7626 |
| | 20 | 2.5 | Rp ¾ | 003L7622 | | G 1 A | 003L7627 |
| | 25 | 4.0 | Rp 1 | 003L7623 | | G 1¼ A | 003L7628 |
| | 32 | 6.3 | Rp 1¼ | 003L7624 | | G 1½ A | 003L7629 |
| | 40 | 10 | Rp 1½ | 003L7625 | | G 1¾ A | 003L7630 |

***Note:*** *for whole range of ASV partner valves, spare parts and accessories please refer to ASV datasheet.*

## Accessories and spare parts

| Type | Description | Comments/connection | Code No. |
|---|---|---|---|
| | Impulse tube, with O-rings | 1.5 m | **003L8152** |
| | | 2.5 m | **003Z0690** |
| | | 5 m | **003L8153** |
| | ASV-P 20 kPa spring (yellow) | DN 15 | **003L8182** |
| | | DN 20 | **003L8183** |
| | | DN 25 | **003L8184** |
| | | DN 32 / DN 40 | **003L8185** |
| | ASV-P 30 kPa spring (green) | DN 15 | **003L8192** |
| | | DN 20 | **003L8193** |
| | | DN 25 | **003L8194** |
| | | DN 32 / DN 40 | **003L8195** |

## Technical data

| | | |
|---|---|---|
| Nominal diameter | DN | 15-40 |
| Max. pressure | bar | 16 (PN 16) |
| Test pressure | | 25 |
| Differential pressure over the valve | kPa | 10-150 [1)] |
| Temperature | °C | –20 … 120 |
| **Material of parts in contact with water** | | |
| Valve body | | Brass |
| Cone ASV-P | | DZR brass |
| Membrane / O-rings | | EPDM |
| Spring | | Stainless steel |

[1)] *Please note that the maximum admissible differential pressure across the valve 150 kPa should also not be exceeded at partial load.*

## Application

There are two basic configurations when using ASV partner valves (ASV-BD, ASV-I, ASV-M, MSV-F2):

- partner valve outside the control loop (Fig. 1). Recommended configuration: it results in best performance since whole controlled pressure range is available to the riser. Flow limitation is done on each terminal unit in the riser (for example, RA-N with presetting on radiator, etc).
- partner valve inside control loop (Fig. 2). Offers flow limitation on the riser however part of the controlled pressure range is used by pressure drop on partner valve ($\Delta p_i$). It is recommended when flow limitation on each terminal units is not possible.

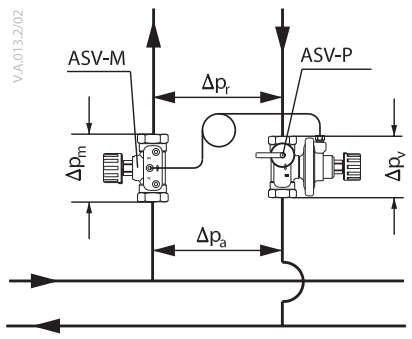


*Fig. 1 Setting of ASV-P = Δpriser*

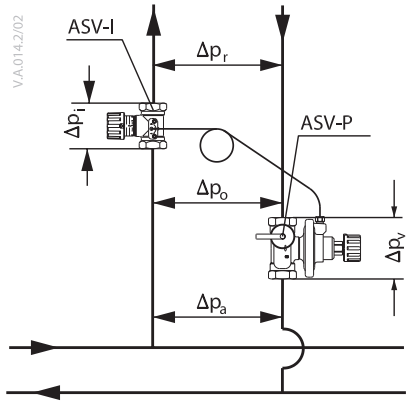


*Fig. 2 Setting of ASV-P = Δpriser + $\Delta p_i$*

ASV-BD can be used outside or inside control loop by choice of which measuring nipple is open. To be used outside control loop, blue measuring nipple needs to be open. In this position, flow verification can be done (default position). To be used inside control loop, red measuring nipple needs to be open. In this position, flow verification & flow verification can be done.

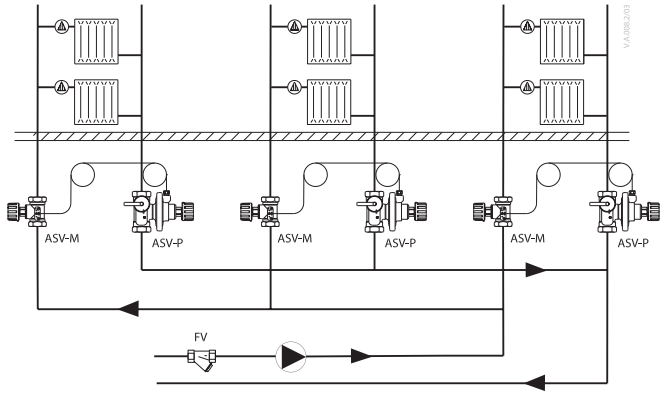


*Fig. 3 ASV in riser / typical heating application (general example)*

## Design

1. Shut-off knob
2. Shut-off spindle
3. O-ring
4. Reference spring
5. Impulse tube connection
6. Diaphragm element
7. Control diaphragm
8. Pressure-relieved valve cone
9. Valve body
10. Seat

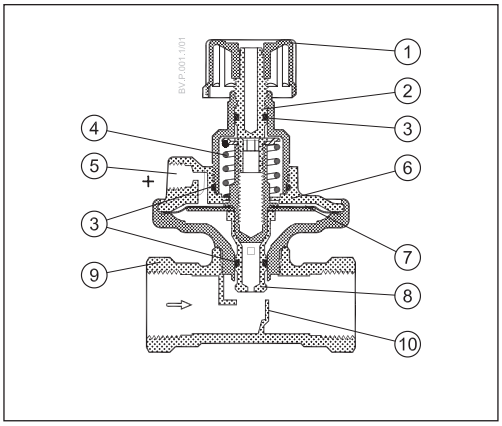


The ASV-P is designed to maintain constant differential pressure across a riser. Via an internal connection and together with the reference spring, pressure in the return pipe acts on the underside of the control diaphragm ⑦ while via an impulse tube ⑤, pressure in the flow pipe acts on the top of the diaphragm. In this way the balancing valve maintains a fixed differential pressure of 10 kPa.
The setting can be increased to 20 or 30 kPa by spring replacement. Spring can be replaced under pressure. The ability to increase the setting is especially useful in case of trouble shooting. It gives insurance that design flow can be achieved even if calculation doesn't match actual installation.

## Dimensions - insulation

ASV-P must be installed in the return pipe with flow in the direction of the arrow on the valve body. Partner valves (ASV-M/I/BD, MSV-F2 must be installed in the flow pipe, with flow in the direction of the arrow on the valve body. The impulse tube must be installed between partner valve and ASV-P. The impulse tube must be flushed through before installation.

## Pressure testing

Max. test pressure is 25 bar. When pressure testing the system you must secure that both sides of the membrane have the same static pressure to prevent damage of the pressure controller. That means the impulse tube must be connected and any needle valves must be open. If ASV-P is installed in combination with ASV-M both valves must be open or closed (both valves must be in the same position!). If ASV-P is installed in combination with ASV-I /ASV-BD both valves must be open. During this operation (closing or opening the valves) please make sure that there is never lower pressure on upper side of the membrane to prevent damaging it.

## Starting

During system start – opening the shut-off on ASV and partner valve-please secure that there is the same static pressure on both sides or higher pressure on upper side of the membrane.

If filling is done by opening ASV-P and partner valve, please make sure there is a pressure on the upper side of the membrane by opening partner valve first before ASV-P is opened.

## Appendix A-*Sizing diagram*

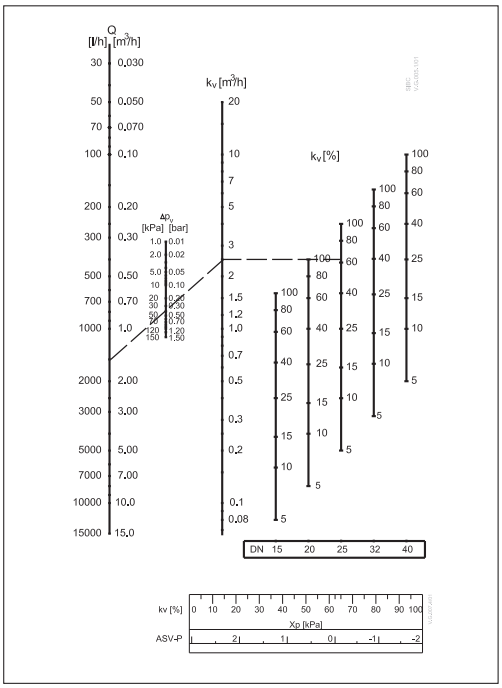

## Dimensions

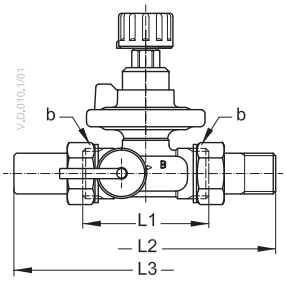


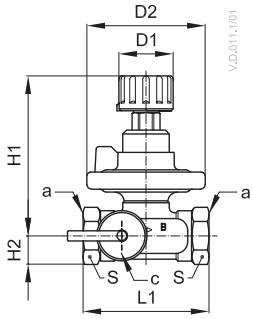


| DN | L1 | L2 | L3 | H1 | H2 | D1 | D2 | S | a | b | c |
|---|---|---|---|---|---|---|---|---|---|---|---|
| | mm | | | | | | | | ISO 7/1 | ISO 228/1 | |
| 15 | 65 | 120 | 139 | 82 | 15 | 28 | 61 | 27 | Rp ½ | G ¾ A | G ¾ A |
| 20 | 75 | 136 | 159 | 103 | 18 | 35 | 76 | 32 | Rp ¾ | G 1 A | |
| 25 | 85 | 155 | 169 | 132 | 23 | 45 | 98 | 41 | Rp 1 | G 1¼ A | |
| 32 | 95 | 172 | 179 | 165 | 29 | 55 | 122 | 50 | Rp 1¼ | G 1½ A | |
| 40 | 100 | 206 | 184 | 170 | 31 | 55 | 122 | 55 | Rp 1½ | G 1¾ A | |

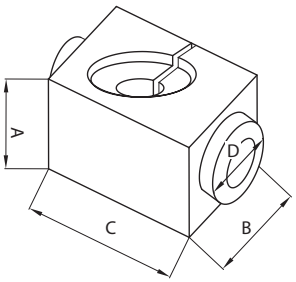


### Insulation

| DN | A | B | C | D |
|---|---|---|---|---|
| | mm | | | |
| 15 | 61 | 110 | 111 | 37 |
| 20 | 76 | 120 | 136 | 45 |
| 25 | 100 | 135 | 155 | 55 |
| 32 | 118 | 148 | 160 | 70 |
| 40 | 118 | 148 | 180 | 70 |

Danfoss can accept no responsibility for possible errors in catalogues, brochures and other printed material. Danfoss reserves the right to alter its products without notice. This also applies to products already on order provided that such alterations can be made without subsequential changes being necessary in specifications already agreed.
All trademarks in this material are property of the respective companies. Danfoss and the Danfoss logotype are trademarks of Danfoss A/S. All rights reserved.

ENGINEERING
TOMORROW

Data sheet

# Automatic balancing valve ASV-I (DN 15-50)

## Description

ASV-I is a partner valve to be used together with the automatic balancing valves ASV-PV/P to control differential pressure in the risers where the radiator valves have no presetting facilities. It is a combined adjustment and shut-off valve designed for installation in the flow pipe. It incorporates flow limitation so that it can be set for required maximum flow in the riser.
ASV-I is supplied with rectus measuring nipples so that flow in the pipe can be measured.
The valve (DN 15-40) is packaged in styropore (EPS) which can be used for insulation at temperatures up to 80 °C. An insulation cap is available as an accessory for insulation at higher temperatures (up to 120 °C).

## Ordering

***NOTE:*** *for whole range of ASV partner valves, spare parts and accessories please refer to ASV datasheet.*

ASV-I adjustment valve, inclusive two measuring nipples

| Type | DN | $k_{vs}$ ($m^3/h$) | Internal thread (ISO 7/1) | Code No. | Type | External thread (ISO 228/1) | Code No. |
|---|---|---|---|---|---|---|---|
| | 15 | 1,6 | $R_p$ ½ | **003L7641** | | G ¾ A | **003L7646** |
| | 20 | 2,5 | $R_p$ ¾ | **003L7642** | | G 1 A | **003L7647** |
| | 25 | 4,0 | $R_p$ 1 | **003L7643** | | G 1¼ A | **003L7648** |
| | 32 | 6,3 | $R_p$ 1¼ | **003L7644** | | G 1½ A | **003L7649** |
| | 40 | 10 | $R_p$ 1½ | **003L7645** | | G 1¾ A | **003L7650** |
| | 50 | 16 | | | | G 2¼ A | **003L7652** |

## Accessories and spare parts

| Type | Description | Comments/connection | Code No. |
|---|---|---|---|
| | Shut-off knob for ASV-I (black) | DN 15 | **003L8155** |
| | | DN 20 | **003L8156** |
| | | DN 25 | **003L8157** |
| | | DN 32 / DN 40 / DN 50 | **003L8158** |
| | Two test plugs and one locking plate | For ASV-I and ASV-M, rectus type (DN 15-40) | **003L8145** |
| | Plug for impulse tube connection ASV-I/M | Set of 10 pieces / G 1/16 A | **003L8174** |

## Technical data

| | | |
|---|---|---|
| Nominal diameter | DN | 15-50 |
| Max. pressure | bar | 16 (PN 16) |
| Test pressure | | 25 |
| Differential pressure over the valve | kPa | 10-150 [1] |
| Temperature | °C | –20 … 120 |
| **Material of parts in contact with water** | | |
| Valve body | | Brass |
| Membrane / O-rings | | EPDM |
| Spring | | Stainless steel |

[1] *Please note that the maximum admissible differential pressure across the valve 150 kPa should also not be exceeded at partial load.*

## Application

ASV-I has to be used as partner valve inside control loop (Fig. 1). ASV-I and ASV-P(V) is connected via an impulse tube, and there by giving a constant differential pressure across the riser and ASV-I.

This configuration offers flow limitation on the riser however part of the controlled pressure range is used by pressure drop on partner valve ($\Delta p_i$). It is recommended when flow limitation on each terminal units is not possible.

This way it is possible to control the maximum flow for each riser, and ensuring distribution between them.

- partner valve inside control loop (Fig. 1). Offers flow limitation on the riser however part of the controlled pressure range is used by pressure drop on partner valve ($\Delta p_i$). It is recommended when flow limitation on each terminal units is not possible.

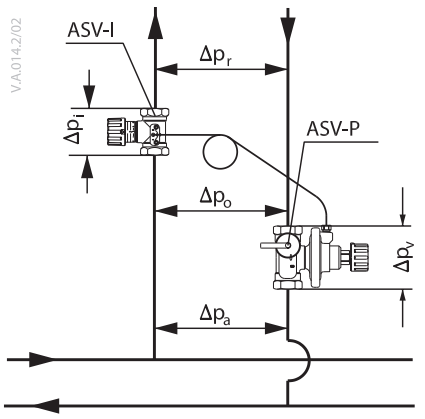


*Fig. 1 Setting of ASV-I = $\Delta p_{riser} + \Delta p_i$*

Design

1. Shut-off knob
2. Shut-off spindle
3. Setting spindle
4. Scale disc
5. O-rings
6. Valve cone
7. Seat
8. Valve body

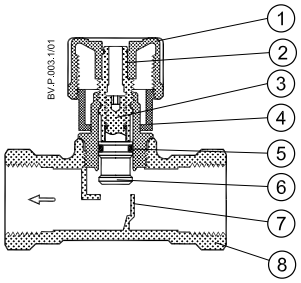


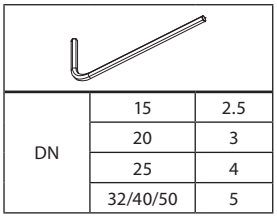


ASV-I incorporates a double cone able to give maximum stroke limitation, thus achieving flow limitation. It also incorporates shut off function. ASV-I is equipped with the nipples for the flow measurement and a connection for the ASV-I/ ASV-PV impulse tube.

Use the following procedure to limit the flow: turn the valve knob fully counter clockwise to open the valve. The mark on the knob will now be opposite »0« on the scale. Turn the valve knob clockwise to the required setting (e.g. for setting 2.2 the knob must be rotated two full turns and then forward to »2« on the scale. Hold the knob to keep the setting (e.g. 2.2) and using a hexagon socket key turn the spindle fully counter clockwise (until a stop can be felt). Turn the valve knob fully counter clockwise so that the mark on the knob is opposite »0« on the scale.

The valve is now open as many turns from the closed position (2.2) as indicated by the conversion from required flow. To annul the setting, turn the hexagon socket key fully clockwise (until a stop can be felt).

Remember, at the same time the knob must be held on its »0« setting.

To read presetting valve has to be closed.

## Sizing

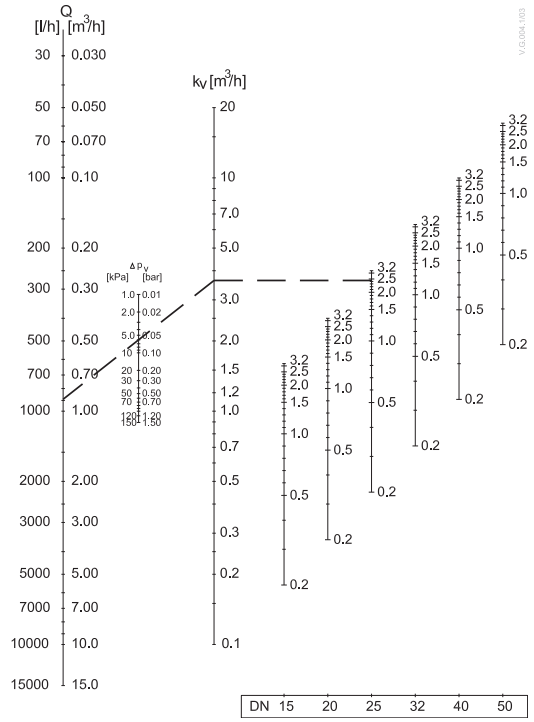


## Dimensions

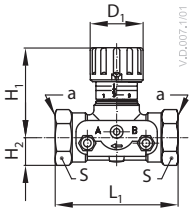


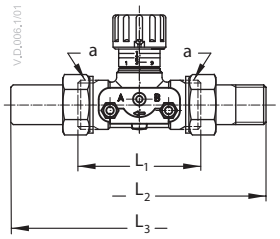


| DN | $L_1$ | $L_2$ | $L_3$ | $H_1$ | $H_2$ | $D_1$ | S | a ISO 7/1 | b ISO 228/1 |
|---|---|---|---|---|---|---|---|---|---|
| | mm | | | | | | | | |
| 15 | 65 | 120 | 139 | 48 | 15 | 28 | 27 | Rp ½ | G ¾ A |
| 20 | 75 | 136 | 159 | 60 | 18 | 35 | 32 | Rp ¾ | G 1 A |
| 25 | 85 | 155 | 169 | 75 | 23 | 45 | 41 | Rp 1 | G 1¼ A |
| 32 | 95 | 172 | 179 | 95 | 29 | 55 | 50 | Rp 1¼ | G 1½ A |
| 40 | 100 | 206 | 184 | 100 | 31 | 55 | 55 | Rp 1½ | G 1¾ A |
| 50 | 130 | 246 | 214 | 106 | 38 | 55 | 67 | - | G 2¼ A |

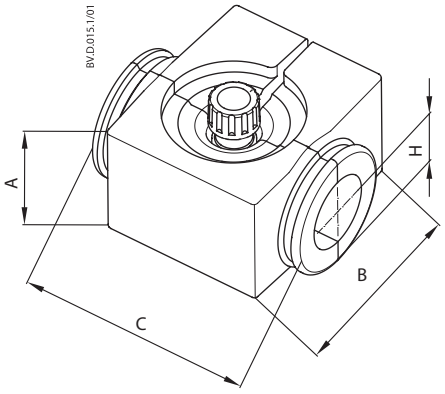


### Insulation [1)]

| DN | A | B | C | H |
|---|---|---|---|---|
| | mm | | | |
| 15 | 61 | 110 | 111 | 30 |
| 20 | 76 | 120 | 136 | 38 |
| 25 | 100 | 135 | 155 | 50 |
| 32 | 118 | 148 | 160 | 60 |
| 40 | 118 | 148 | 180 | 60 |

*[1)] Insulation available for sizes DN 15-40*

ENGINEERING
TOMORROW

Data sheet

# Manual presetting valves LENO™ MSV-BD

## Description

LENO™ MSV-BD is a range of manual valves for balancing flow in heating and cooling systems.

LENO™ MSV-BD is a combined presetting and shut off valve with a range of unique features:

- Removable hand wheel for easy mounting.
- 360° turnable measuring station for convenient measuring and draining.
- Numeric presetting scale, visible from more angles.
- Easy locking of presetting.
- Built-in test plugs for Ø 3 mm needles.
- Drain connection with separate draining of inlet and outlet side of valve.
- Open-close with Allen key for extra force.
- Open-closed colour indicator.

It is recommended to use LENO™ MSV-BD in constant flow systems. The valve may be mounted in flow or return.

DN 15 and 20 valves are available with internal or external thread. Other dimensions with internal thread.

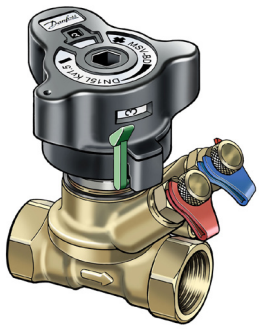

*Danfoss PFM 1000/PFM 100 measuring instruments contain valve data for LENO™ MSV-BD in memory.*

## Application

**Boiler, flat station or heat pump in 1-family houses**

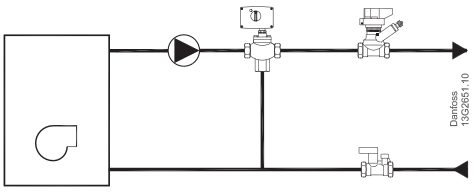


- For balancing.
- Shut-off function for service/repair.

**Air handling unit**

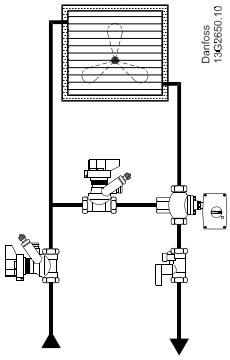


- For constant flow.
- For balancing.
- Shut-off function for service/repair.

## Application

**Fan coils**

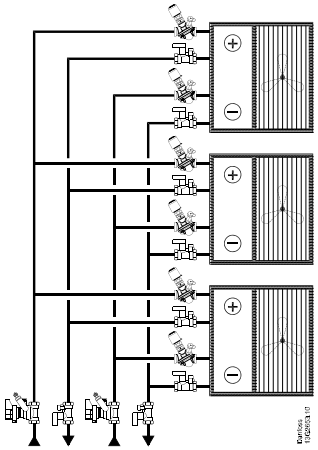

- For flow verification.
- Shut-off function for service/repair.

**1-pipe system**

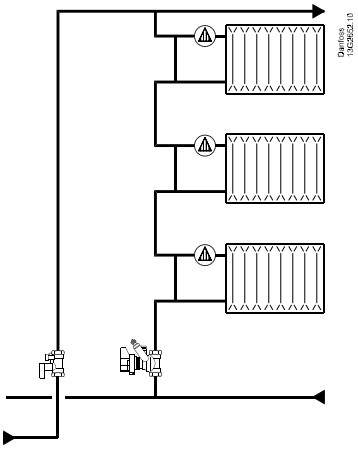

- For balancing.
- Shut-off function for service/repair.

**DOMESTIC HOT WATER SYSTEMS:** *Depending on local legislation it can be used in Domestic hot water applications.*

## Ordering

### LENO™ MSV-BD valve with internal thread

| Type | Material | Size (mm) | $k_{vs}$ ($m^3/h$) | Connection | Quantity | Code No. |
|---|---|---|---|---|---|---|
| 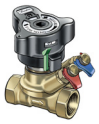 | DZR brass [1] | DN 15 LF | 2.5 | ½" | 1 | **003Z4000** |
| | | DN 15 | 3.0 | ½" | 1 | **003Z4001** |
| | | DN 20 | 6.0 | ¾" | 1 | **003Z4002** |
| | | DN 25 | 9.5 | 1" | 1 | **003Z4003** |
| | | DN 32 | 18 | 1¼" | 1 | **003Z4004** |
| | | DN 40 | 26 | 1½" | 1 | **003Z4005** |
| | | DN 50 | 40 | 2" | 1 | **003Z4006** |
| | | DN 15 | 3.0 | ½" | 8 | **003Z4261** |
| | | DN 20 | 6.6 | ¾" | 8 | **003Z4262** |
| | | DN 25 | 9.5 | 1" | 8 | **003Z4263** |

### LENO™ MSV-BD valve with external thread

| Type | Material | Size (mm) | $k_{vs}$ ($m^3/h$) | Connection | Code No. |
|---|---|---|---|---|---|
| | DZR brass [1] | DN 15 LF | | | **003Z4100** |
| | | DN 15 | 3.0 | G ¾ A [2] | **003Z4101** |
| | | DN 20 | 6.0 | G 1 A | **003Z4102** |

### LENO™ MSV-BD/S set solution

| Type | Material | Size (mm) | $k_{vs}$ ($m^3/h$) | Drain flow [3] (l/h) | Connection | Code No. |
|---|---|---|---|---|---|---|
| | DZR brass [1] | DN 15 | 3.0 | 281 | ½" | **003Z4051** |
| | | DN 20 | 6.0 | 277 | ¾" | **003Z4052** |
| | | DN 25 | 9.5 | 316 | 1" | **003Z4053** |
| | | DN 32 | 18 | 305 | 1¼" | **003Z4054** |
| | | DN 40 | 26 | 208 | 1½" | **003Z4055** |
| | | DN 50 | 40 | 308 | 2" | **003Z4056** |

*[1] Corrosion resistant brass*
*[2] Eurocone DIN V 3838*
*[3] Drain flow is measured at 1 bar static pressure and 0.1 bar differential pressure.*


© Danfoss | 2020.08

## Ordering (continued)

### Accessories

| Type | Code No. |
|---|---|
| Standard test plugs, 2 pcs. | **003Z4662** |
| Measuring test plugs, 53 mm, red and blue | **003Z3946** |
| Operating handle | **003Z4652** |
| Drain connection, ½" thread | **003Z4096** |
| Drain connection, ¾" thread | **003Z4097** |
| Flow measuring instrument PFM 1000 (10 bar) | **003Z8260** |
| Flow measuring instrument PFM 1000 (20 bar) | **003Z8261** |
| Identification tag & strips, 10 pcs. | **003Z4660** |
| MSV-BD insulation, DN 15 | **003Z4781** |
| MSV-BD insulation, DN 20 | **003Z4782** |
| MSV-BD insulation, DN 25 | **003Z4783** |
| MSV-BD insulation, DN 32 | **003Z4784** |
| MSV-BD insulation, DN 40 | **003Z4785** |
| MSV-BD insulation, DN 50 | **003Z4786** |

### LENO™ MSV-BD valve with external thread

| Pipe (mm) | Valve thread | PEX fittings, Code no. | Alupex fittings, Code no. |
|---|---|---|---|
| 12 x 1.1 | G ¾ | **013G4150** | |
| 12 x 2 | G ¾ | **013G4152** | **013G4182** |
| 13 x 2 | G ¾ | **013G4153** | |
| 14 x 2 | G ¾ | **013G4154** | **013G4184** |
| 15 x 1.7 | G ¾ | **013G4165** | |
| 15 x 2.5 | G ¾ | **013G4155** | **013G4185** |
| 16 x 1.5 | G ¾ | **013G4157** | |
| 16 x 2 | G ¾ | **013G4156** | **013G4186** |
| 16 x 2.25 | G ¾ | | **013G4187** |
| 17 x 2 | G ¾ | **013G4162** | |
| 18 x 2 | G ¾ | **013G4158** | **013G4188** |
| 18 x 2.5 | G ¾ | **013G4159** | |
| 20 x 2 | G ¾ | **013G4160** | **013G4190** |
| 20 x 2.5 | G ¾ | **013G4161** | **013G4191** |

### Compression fittings for valves with external thread

| Steel/copper pipes | Dimension | Code no. |
|---|---|---|
| 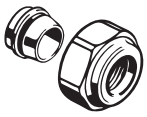 | G ¾ x 15 | **013G4125** |
| | G ¾ x 16 | **013G4126** |
| | G ¾ x 18 | **013G4128** |
| | G 1 x 18 | **013U0134** |
| | G 1 x 22 | **013U0135** |

## Design

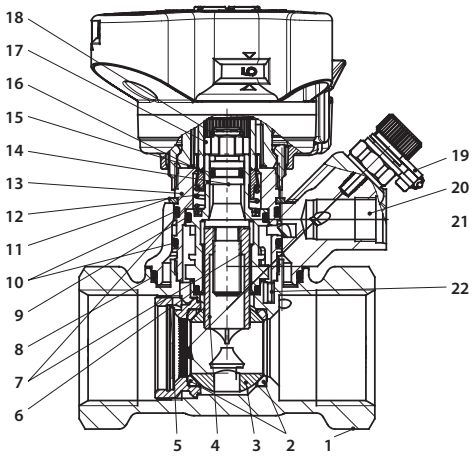


1. Valve body
2. Ball seat
3. Ball
4. Throttle bush
5. Support screw
6. O-ring
7. Shut-off bush
8. O-ring
9. O-ring
10. O-ring
11. Retaining ring (corrosion protected)
12. Spring
13. Valve top
14. Spindle
15. O-ring
16. Rotation lock
17. Spindle head
18. Retaining ring, corrosion protected
19. Strips, 2 pcs.
20. Test plugs protection screw
21. Hose connection
22. Stop plug

### Materials and parts in contact with water

| | |
|---|---|
| Valve body | DZR brass |
| O-rings | EPDM |
| Ball | Brass/chromium plated |
| Ball sealing | Teflon |

## Technical data

| | |
|---|---|
| Max. static working pressure | 20 bar |
| Static test pressure | 30 bar |
| Max. differential pressure across valve | 2.5 bar (250 kPa) |
| Max. flow temperature | 120 °C |
| Min. temperature | -20 °C |
| Cooling liquids | Ethylene glycol / propylene glycol and HYCOOL (max. 30 %) |

## Fitting

Before fitting the valve the installer must ensure that the pipe system is clean and:
1. the valve can be turned 360 degrees (if threaded pipe is used).
2. the valve is fitted according to the flow direction arrow.

**Removal of the handle**
1. Set the handle at 0.0.
2. Release the setting lock (green).
3. Unscrew the union nut.

**Calibration of the handle**
Before refitting, ensure that the handle setting is 0.0.

**For DN 15 - 20 valves with external thread**
Danfoss offers a complete range of compression fittings for steel, cobber and PEX pipes.

| DN | R1/R2 (mm) |
|---|---|
| 15 | 86/67 |
| 20 | 89/69 |
| 25 | 91/71 |
| 32 | 118/84 |
| 40 | 118/84 |
| 50 | 124/90 |

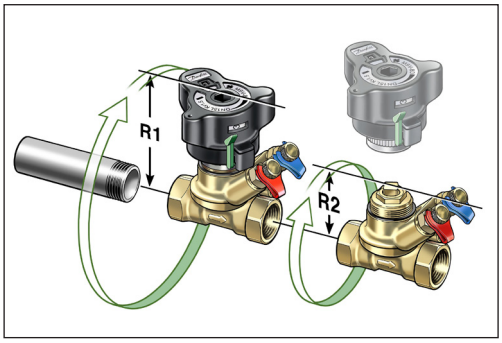



© Danfoss | 2020.08

## Shut-off

In order to shut-off the valve the handle must be pressed down.

The shut-off function features a ball valve, which only requires a 90 degree turn to shut the valve completely.

An indicator window shows the actual setting:
- red = closed
- white = open

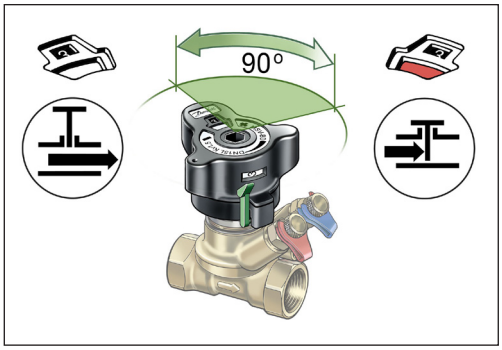


## Draining

**Note!**
**The drain connection is an accessory and must be purchased separately.**

The drain tap can rotate 360 degrees for convenient operation.

Draining the system pipes can be done selectively:
When the red test plug is opened, the valve inlet pipe is drained.
Opening the blue test plug will drain the pipe on the valve outlet side. Test plugs unscrewing protection screw is located between valve test plugs.

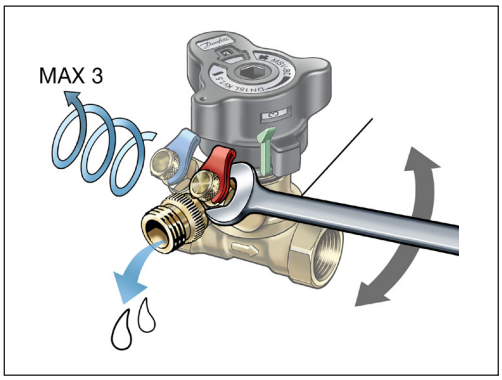


## Setting and sealing

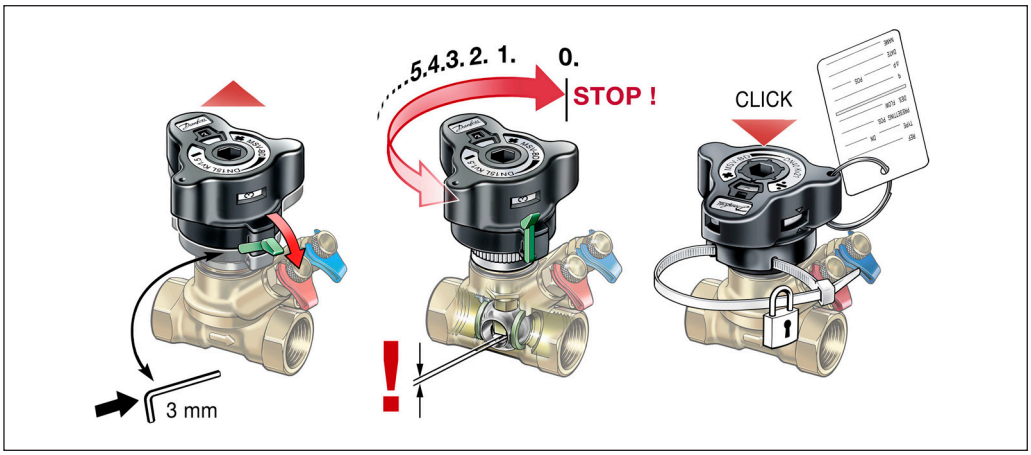


The valve has a presetting feature for setting/ adjusting flow ratings.

Setting the required flow is made in 5 steps:
1. In open position, release the lock using the green lever or a 3 mm Allen key.
2. The handle pops up automatically.
3. The calculated value can now be set.
4. The setting is locked when the handled is pressed to click.
5. The setting can be sealed by using a strip as shown.

## Measuring

The flow through the LENO™ MSV-BD valve can be measured using Danfoss PFM 1000 or other brands of measuring instruments.
The LENO™ MSV-BD valve is supplied with two test plugs for Ø3 mm needles.
A twin bracket enables the user to connect both needles simultanously.

Procedure for flow measuring:
1. Select flow measuring.
2. Select valve brand.
3. Select valve type and dimension.
4. Enter presetting.
5. Connect valve and instrument.
6. Calibrate static pressure.
7. Measure the flow.

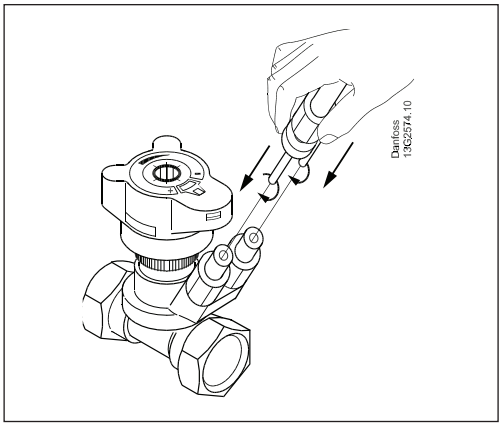


## Measuring accuracy

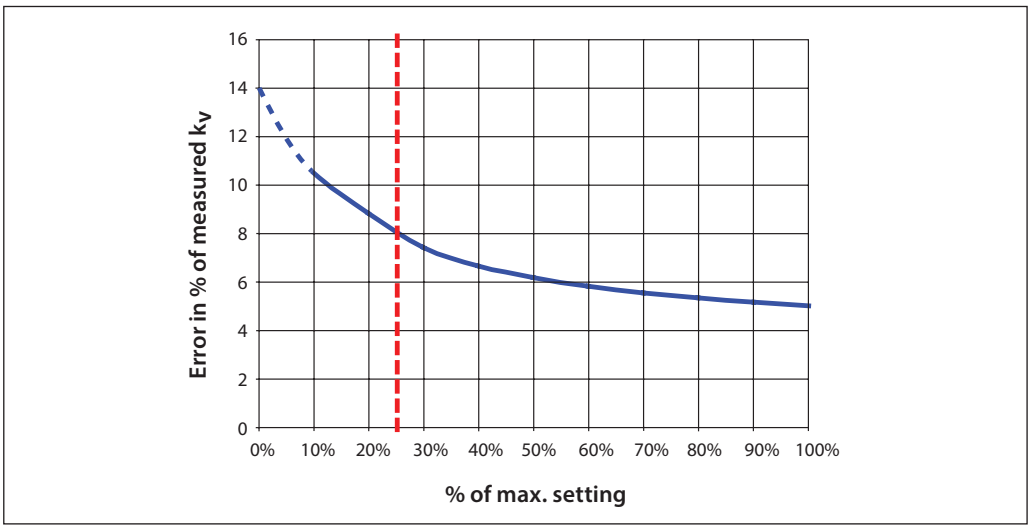


LENO™ MSV-BD is very accurate, due to the separate functions for presetting and shut-off. Valve can be mounted everywhere in the system (closed to T-pieces, elbows, pumps, etc.), since it is unaffected by turbulence in any setting or instalation.

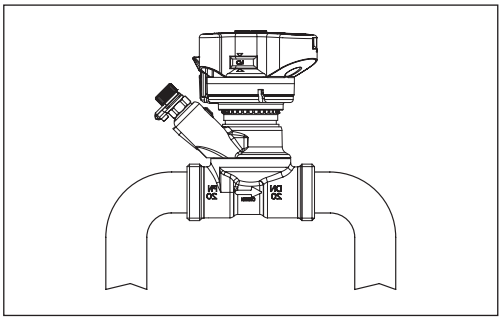

The red line indicates 25% of max. flow.

According to BS7350:1990 flow rates must be within following values:
± 18% at 25% open position
± 10% at fully open position

## Kv-signal

kv-signal values are used for non-Danfoss measuring instruments. Danfoss PFM 1000 have all data in memory, and the instruments are using this formula:

$$\Delta P_{val} = \Delta P_{sig} \left( \frac{k_{v\text{-}sig}}{k_{v\text{-}val}} \right)^2$$

Δp across the test plugs ($k_v$-sig) and Δp across the valve ($k_v$-val) is not the same due to turbulence influence for pressure measuring.


© Danfoss | 2020.08

## $K_V$-signal values

| Setting | DN 15LF | DN 15 | DN 20 | DN 25 | DN 32 | DN 40 | DN 50 |
|---|---|---|---|---|---|---|---|
| 0.0 | 0.07 | 0.10 | 0.12 | 0.34 | 0.51 | 1.05 | 1.75 |
| 0.1 | 0.08 | 0.11 | 0.16 | 0.44 | 0.73 | 1.20 | 2.01 |
| 0.2 | 0.09 | 0.12 | 0.20 | 0.53 | 0.92 | 1.36 | 2.25 |
| 0.3 | 0.11 | 0.13 | 0.26 | 0.61 | 1.10 | 1.55 | 2.47 |
| 0.4 | 0.12 | 0.14 | 0.32 | 0.67 | 1.26 | 1.74 | 2.69 |
| 0.5 | 0.13 | 0.16 | 0.38 | 0.73 | 1.43 | 1.95 | 2.91 |
| 0.6 | 0.15 | 0.19 | 0.45 | 0.79 | 1.60 | 2.17 | 3.12 |
| 0.7 | 0.16 | 0.21 | 0.53 | 0.84 | 1.78 | 2.40 | 3.35 |
| 0.8 | 0.17 | 0.24 | 0.60 | 0.90 | 1.97 | 2.64 | 3.58 |
| 0.9 | 0.19 | 0.26 | 0.67 | 0.95 | 2.18 | 2.88 | 3.82 |
| 1.0 | 0.20 | 0.29 | 0.74 | 1.01 | 2.39 | 3.13 | 4.07 |
| 1.1 | 0.21 | 0.32 | 0.82 | 1.08 | 2.62 | 3.39 | 4.33 |
| 1.2 | 0.23 | 0.34 | 0.89 | 1.14 | 2.87 | 3.64 | 4.60 |
| 1.3 | 0.25 | 0.37 | 0.96 | 1.22 | 3.12 | 3.90 | 4.89 |
| 1.4 | 0.27 | 0.40 | 1.03 | 1.29 | 3.38 | 4.16 | 5.18 |
| 1.5 | 0.30 | 0.44 | 1.09 | 1.37 | 3.64 | 4.43 | 5.49 |
| 1.6 | 0.32 | 0.47 | 1.16 | 1.46 | 3.92 | 4.69 | 5.80 |
| 1.7 | 0.35 | 0.51 | 1.23 | 1.55 | 4.19 | 4.96 | 6.13 |
| 1.8 | 0.37 | 0.54 | 1.30 | 1.65 | 4.48 | 5.24 | 6.46 |
| 1.9 | 0.40 | 0.58 | 1.38 | 1.75 | 4.76 | 5.51 | 6.80 |
| 2.0 | 0.43 | 0.61 | 1.45 | 1.85 | 5.05 | 5.80 | 7.14 |
| 2.1 | 0.46 | 0.65 | 1.53 | 1.96 | 5.35 | 6.08 | 7.49 |
| 2.2 | 0.49 | 0.69 | 1.61 | 2.07 | 5.65 | 6.38 | 7.84 |
| 2.3 | 0.52 | 0.73 | 1.69 | 2.18 | 5.96 | 6.68 | 8.19 |
| 2.4 | 0.56 | 0.77 | 1.78 | 2.29 | 6.27 | 6.99 | 8.55 |
| 2.5 | 0.59 | 0.80 | 1.87 | 2.41 | 6.60 | 7.30 | 8.91 |
| 2.6 | 0.62 | 0.85 | 1.97 | 2.53 | 6.94 | 7.63 | 9.27 |
| 2.7 | 0.66 | 0.89 | 2.07 | 2.65 | 7.29 | 7.98 | 9.64 |
| 2.8 | 0.69 | 0.93 | 2.17 | 2.77 | 7.67 | 8.33 | 10.00 |
| 2.9 | 0.73 | 0.97 | 2.29 | 2.89 | 8.06 | 8.70 | 10.37 |
| 3.0 | 0.76 | 1.01 | 2.40 | 3.01 | 8.48 | 9.08 | 10.74 |
| 3.1 | 0.80 | 1.04 | 2.52 | 3.13 | 8.92 | 9.48 | 11.11 |
| 3.2 | 0.83 | 1.08 | 2.65 | 3.25 | 9.38 | 9.90 | 11.49 |
| 3.3 | 0.87 | 1.12 | 2.78 | 3.37 | 9.87 | 10.33 | 11.88 |
| 3.4 | 0.90 | 1.16 | 2.91 | 3.49 | 10.38 | 10.79 | 12.27 |
| 3.5 | 0.94 | 1.20 | 3.05 | 3.62 | 10.91 | 11.26 | 12.67 |
| 3.6 | 0.97 | 1.25 | 3.19 | 3.74 | 11.46 | 11.74 | 13.09 |
| 3.7 | 1.01 | 1.30 | 3.33 | 3.87 | 12.02 | 12.25 | 13.51 |
| 3.8 | 1.06 | 1.35 | 3.47 | 4.00 | 12.58 | 12.77 | 13.95 |
| 3.9 | 1.10 | 1.41 | 3.61 | 4.13 | 13.12 | 13.30 | 14.41 |
| 4.0 | 1.14 | 1.47 | 3.75 | 4.26 | 13.64 | 13.85 | 14.88 |
| 4.1 | 1.18 | 1.53 | 3.89 | 4.39 | 14.12 | 14.41 | 15.38 |
| 4.2 | 1.23 | 1.59 | 4.02 | 4.53 | 14.52 | 14.98 | 15.89 |
| 4.3 | 1.27 | 1.66 | 4.15 | 4.68 | 14.84 | 15.55 | 16.44 |
| 4.4 | 1.31 | 1.73 | 4.28 | 4.82 | | 16.13 | 17.00 |
| 4.5 | 1.35 | 1.81 | 4.40 | 4.98 | | 16.69 | 17.59 |
| 4.6 | 1.39 | 1.91 | 4.52 | 5.13 | | 17.25 | 18.21 |
| 4.7 | 1.43 | 2.00 | 4.62 | 5.29 | | 17.80 | 18.86 |
| 4.8 | 1.47 | 2.08 | 4.72 | 5.46 | | 18.32 | 19.54 |
| 4.9 | 1.51 | 2.16 | 4.82 | 5.64 | | 18.80 | 20.24 |
| 5-0 | 1.54 | 2.23 | 4.90 | 5.81 | | 19.25 | 20.97 |
| 5.1 | 1.60 | 2.30 | 4.97 | 6.00 | | 19.65 | 21.73 |
| 5.2 | 1.66 | 2.36 | 5.04 | 6.19 | | 19.98 | 22.51 |
| 5.3 | 1.72 | 2.41 | | 6.38 | | 20.24 | 23.30 |
| 5.4 | 1.79 | 2.46 | | 6.57 | | 20.41 | 24.12 |
| 5.5 | 1.87 | 2.50 | | 6.77 | | 20.48 | 24.94 |
| 5.6 | 1.93 | 2.54 | | 6.96 | | | 25.76 |
| 5.7 | 1.99 | 2.57 | | 7.15 | | | 26.58 |
| 5.8 | 2.04 | | | 7.34 | | | 27.38 |
| 5.9 | 2.09 | | | 7.52 | | | 28.16 |
| 6.0 | 2.14 | | | 7.69 | | | 28.90 |
| 6.1 | 2.18 | | | 7.85 | | | 29.59 |
| 6.2 | 2.22 | | | 7.98 | | | 30.21 |
| 6.3 | 2.26 | | | | | | 30.74 |
| 6.4 | | | | | | | 31.17 |
| 6.5 | | | | | | | 31.47 |
| 6.6 | | | | | | | 31.61 |

## Valve size and presetting

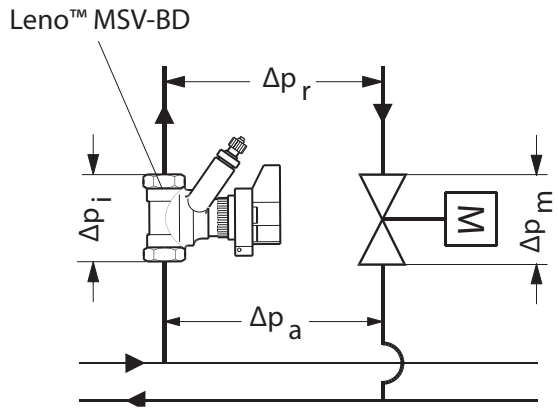


*Δpi Pressure drop across LENO™ MSV-BD valve*
*Δpm Pressure drop across valve*
*Δpr Necessary pressure for the riser*
*Δpa Available pressure for the riser*

**Example**

Given:
Max. pipe flow Q .....2.0 $m^3/h$
$\Delta p_r$.....15 kPa
$\Delta p_a$ .....45 kPa
$\Delta p_m$ .....10 kPa
$\Delta p_i$.....$\Delta p_a$ - $\Delta p_v$ - $\Delta p_m$

$\Delta p_i$ = 45 kPa - 15 kPa - 10KPa = 20 kPa

Correct valve size and presetting is found in the sizing and flow diagrammes, p 9.

Q = 2.0 $m^3/h$ and $\Delta p_i$ = 20 kPa

Setting can be also calculated from the formula:

$$k_v = \frac{Q[m^3/h]}{\sqrt{\Delta p_i}\,[bar]} = \frac{2.0}{\sqrt{0.20}} = 4.5\ m^3/h$$


© Danfoss | 2020.08

## Sizing

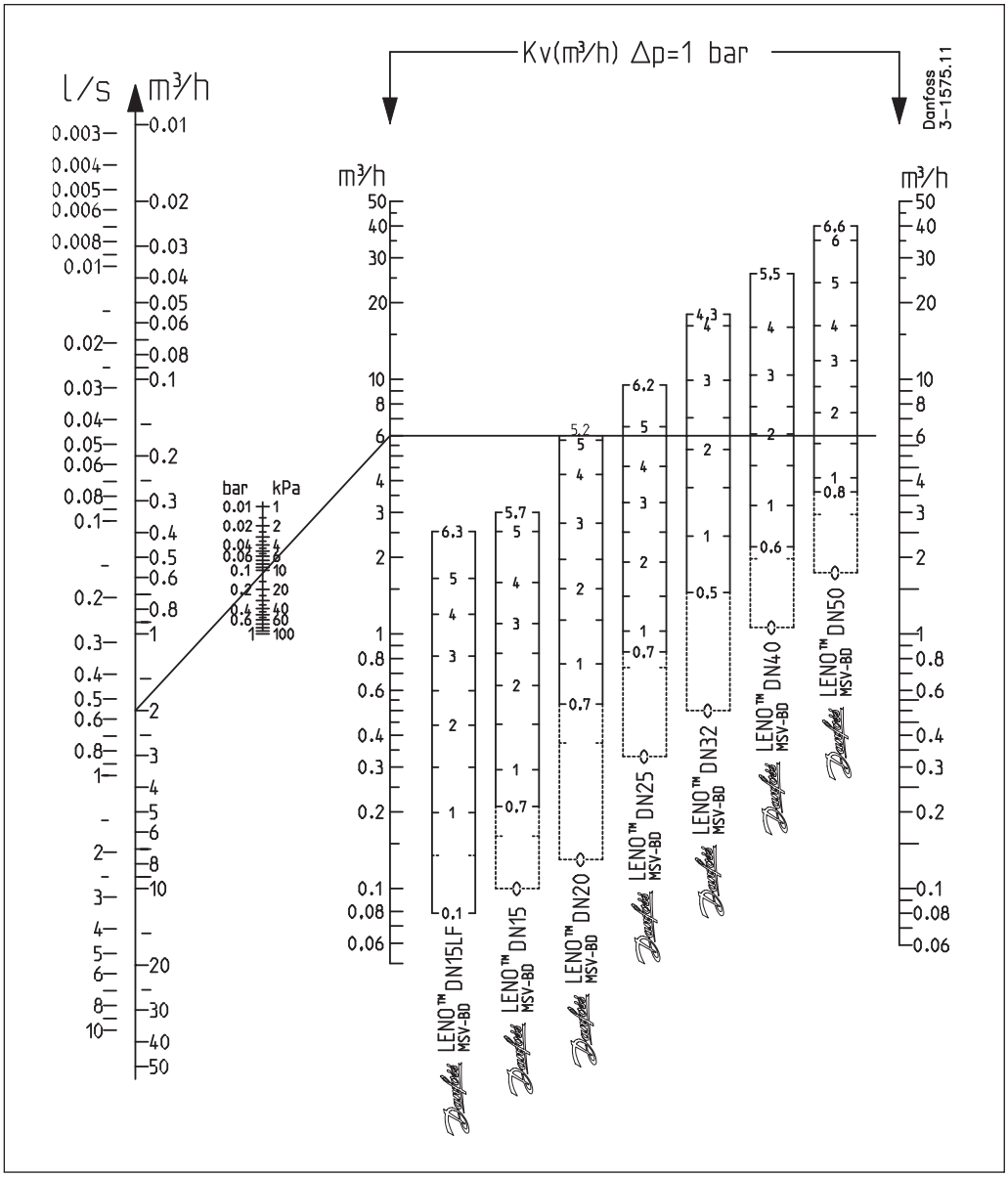


## Correction factors

*Medium: Ethylene glycol / propylene glycol percentage (max. 30 %).*

| Temp. °C | Flow, m³/h | | | | | | |
|---|---|---|---|---|---|---|---|
| | 25 | 30 | 40 | 50 | 60 | 65 | 100 |
| -40.0 | 1) | 1) | 1) | 1) | 0.89 | 0.88 | 1) |
| -17.8 | 1) | 1) | 0.93 | 0.91 | 0.90 | 0.89 | 0.86 |
| 4.4 | 0.95 | 0.95 | 0.93 | 0.92 | 0.91 | 0.90 | 0.87 |
| 26.6 | 0.96 | 0.95 | 0.94 | 0.93 | 0.92 | 0.91 | 0.88 |
| 48.9 | 0.97 | 0.96 | 0.95 | 0.94 | 0.93 | 0.92 | 0.90 |
| 71.1 | 0.98 | 0.98 | 0.96 | 0.95 | 0.94 | 0.94 | 0.95 |
| 93.3 | 1.00 | 0.99 | 0.97 | 0.96 | 0.95 | 0.95 | 0.92 |
| 115.6 | 2) | 2) | 2) | 2) | 2) | 2) | 0.94 |

*1) Below freezing point*
*2) Above boiling point*

**Example**
Flow needed . . . . . .30 m³/h
Flow after correction . . . . . .30 x 0.95 = 28 m³/h

## Flow diagrammes, DN 15 LF

**LENO™ MSV-BD DN 15 LF**

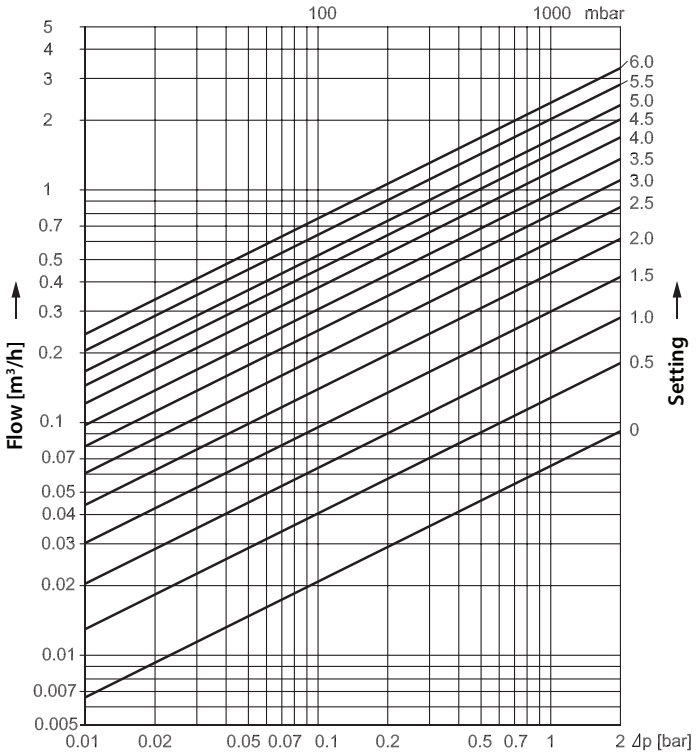


**Flow characteristics**

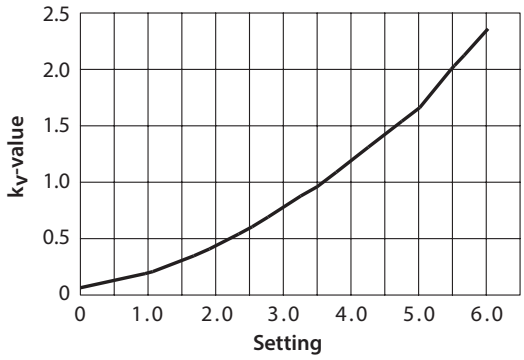


| Setting | $k_V$-value |
|---|---|
| 0.0 | 0.07 |
| 0.1 | 0.08 |
| 0.2 | 0.09 |
| 0.3 | 0.11 |
| 0.4 | 0.12 |
| 0.5 | 0.13 |
| 0.6 | 0.15 |
| 0.7 | 0.16 |
| 0.8 | 0.17 |
| 0.9 | 0.19 |
| 1.0 | 0.20 |
| 1.1 | 0.22 |
| 1.2 | 0.23 |
| 1.3 | 0.25 |
| 1.4 | 0.28 |
| 1.5 | 0.30 |
| 1.6 | 0.32 |
| 1.7 | 0.35 |
| 1.8 | 0.38 |
| 1.9 | 0.41 |
| 2.0 | 0.44 |
| 2.1 | 0.47 |
| 2.2 | 0.50 |
| 2.3 | 0.53 |
| 2.4 | 0.56 |
| 2.5 | 0.60 |
| 2.6 | 0.63 |
| 2.7 | 0.67 |
| 2.8 | 0.71 |
| 2.9 | 0.74 |
| 3.0 | 0.78 |
| 3.1 | 0.82 |
| 3.2 | 0.86 |
| 3.3 | 0.89 |
| 3.4 | 0.93 |
| 3.5 | 0.97 |
| 3.6 | 1.01 |
| 3.7 | 1.05 |
| 3.8 | 1.10 |
| 3.9 | 1.15 |
| 4.0 | 1.19 |
| 4.1 | 1.24 |
| 4.2 | 1.29 |
| 4.3 | 1.33 |
| 4.4 | 1.38 |
| 4.5 | 1.43 |
| 4.6 | 1.48 |
| 4.7 | 1.52 |
| 4.8 | 1.56 |
| 4.9 | 1.61 |
| 5.0 | 1.65 |
| 5.1 | 1.72 |
| 5.2 | 1.78 |
| 5.3 | 1.86 |
| 5.4 | 1.94 |
| 5.5 | 2.03 |
| 5.6 | 2.10 |
| 5.7 | 2.17 |
| 5.8 | 2.23 |
| 5.9 | 2.30 |
| 6.0 | 2.36 |
| 6.1 | 2.42 |
| 6.2 | 2.47 |
| 6.3 | 2.53 |


© Danfoss | 2020.08

## Flow diagrammes, DN 15

### LENO™ MSV-BD DN 15

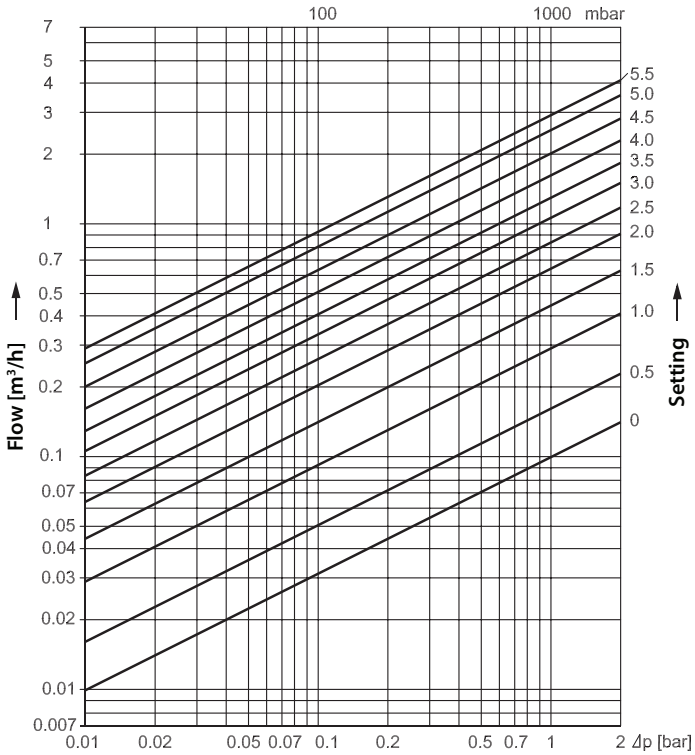


### Flow characteristics

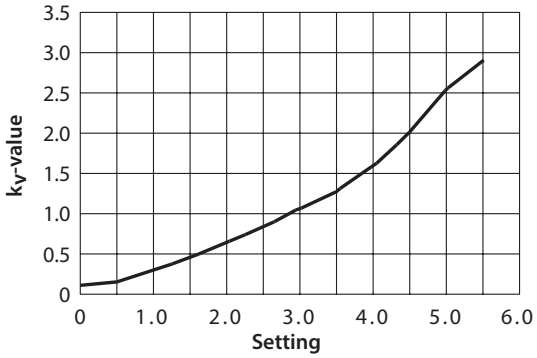


| Setting | $k_V$-value |
|---|---|
| 0.0 | 0.10 |
| 0.1 | 0.11 |
| 0.2 | 0.12 |
| 0.3 | 0.13 |
| 0.4 | 0.14 |
| 0.5 | 0.16 |
| 0.6 | 0.19 |
| 0.7 | 0.21 |
| 0.8 | 0.24 |
| 0.9 | 0.27 |
| 1.0 | 0.29 |
| 1.1 | 0.32 |
| 1.2 | 0.35 |
| 1.3 | 0.38 |
| 1.4 | 0.41 |
| 1.5 | 0.44 |
| 1.6 | 0.48 |
| 1.7 | 0.51 |
| 1.8 | 0.55 |
| 1.9 | 0.59 |
| 2.0 | 0.63 |
| 2.1 | 0.67 |
| 2.2 | 0.71 |
| 2.3 | 0.75 |
| 2.4 | 0.80 |
| 2.5 | 0.84 |
| 2.6 | 0.88 |
| 2.7 | 0.93 |
| 2.8 | 0.97 |
| 2.9 | 1.02 |
| 3.0 | 1.06 |
| 3.1 | 1.10 |
| 3.2 | 1.14 |
| 3.3 | 1.19 |
| 3.4 | 1.23 |
| 3.5 | 1.28 |
| 3.6 | 1.34 |
| 3.7 | 1.40 |
| 3.8 | 1.46 |
| 3.9 | 1.52 |
| 4.0 | 1.59 |
| 4.1 | 1.66 |
| 4.2 | 1.74 |
| 4.3 | 1.82 |
| 4.4 | 1.91 |
| 4.5 | 2.00 |
| 4.6 | 2.12 |
| 4.7 | 2.23 |
| 4.8 | 2.33 |
| 4.9 | 2.43 |
| 5.0 | 2.53 |
| 5.1 | 2.61 |
| 5.2 | 2.70 |
| 5.3 | 2.77 |
| 5.4 | 2.84 |
| 5.5 | 2.90 |
| 5.6 | 2.95 |
| 5.7 | 3.00 |

## Flow diagrammes, DN 20

### LENO™ MSV-BD DN 20

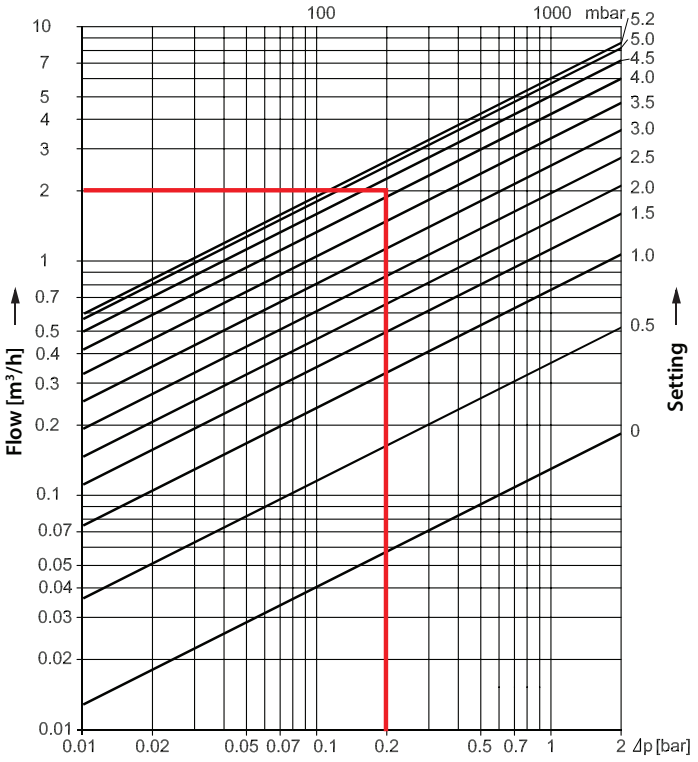


### Flow characteristics

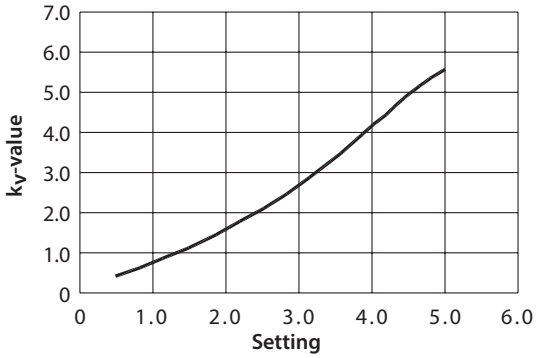


| Setting | $k_v$-value |
|---|---|
| 0.0 | 0.13 |
| 0.1 | 0.15 |
| 0.2 | 0.19 |
| 0.3 | 0.24 |
| 0.4 | 0.30 |
| 0.5 | 0.37 |
| 0.6 | 0.45 |
| 0.7 | 0.53 |
| 0.8 | 0.61 |
| 0.9 | 0.68 |
| 1.0 | 0.76 |
| 1.1 | 0.84 |
| 1.2 | 0.92 |
| 1.3 | 0.99 |
| 1.4 | 1.06 |
| 1.5 | 1.13 |
| 1.6 | 1.21 |
| 1.7 | 1.28 |
| 1.8 | 1.35 |
| 1.9 | 1.43 |
| 2.0 | 1.50 |
| 2.1 | 1.59 |
| 2.2 | 1.67 |
| 2.3 | 1.76 |
| 2.4 | 1.86 |
| 2.5 | 1.96 |
| 2.6 | 2.07 |
| 2.7 | 2.19 |
| 2.8 | 2.31 |
| 2.9 | 2.44 |
| 3.0 | 2.58 |
| 3.1 | 2.72 |
| 3.2 | 2.87 |
| 3.3 | 3.03 |
| 3.4 | 3.19 |
| 3.5 | 3.36 |
| 3.6 | 3.53 |
| 3.7 | 3.70 |
| 3.8 | 3.87 |
| 3.9 | 4.05 |
| 4.0 | 4.23 |
| 4.1 | 4.40 |
| 4.2 | 4.58 |
| 4.3 | 4.75 |
| 4.4 | 4.91 |
| 4.5 | 5.07 |
| 4.6 | 5.22 |
| 4.7 | 5.37 |
| 4.8 | 5.51 |
| 4.9 | 5.64 |
| 5.0 | 5.77 |
| 5.1 | 5.88 |
| 5.2 | 6.00 |


© Danfoss | 2020.08

## Flow diagrammes, DN 25

### LENO™ MSV-BD DN 25

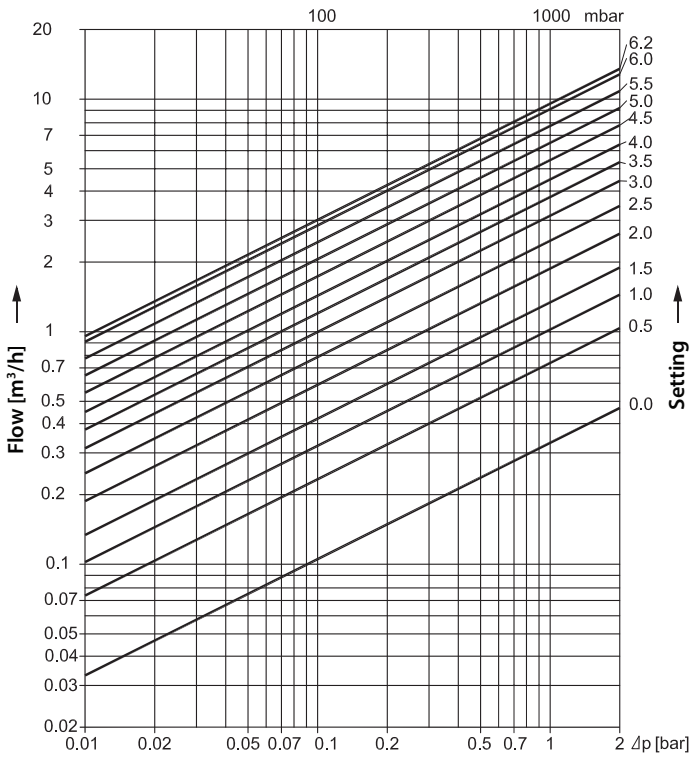


### Flow characteristics

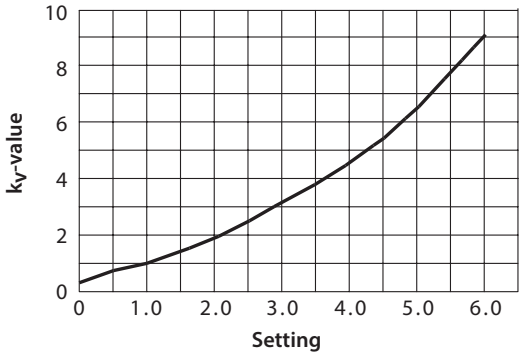


| Setting | $k_v$-value |
|---|---|
| 0.0 | 0.33 |
| 0.1 | 0.44 |
| 0.2 | 0.53 |
| 0.3 | 0.61 |
| 0.4 | 0.68 |
| 0.5 | 0.74 |
| 0.6 | 0.79 |
| 0.7 | 0.85 |
| 0.8 | 0.91 |
| 0.9 | 0.96 |
| 1.0 | 1.03 |
| 1.1 | 1.09 |
| 1.2 | 1.16 |
| 1.3 | 1.24 |
| 1.4 | 1.32 |
| 1.5 | 1.41 |
| 1.6 | 1.50 |
| 1.7 | 1.60 |
| 1.8 | 1.70 |
| 1.9 | 1.80 |
| 2.0 | 1.91 |
| 2.1 | 2.03 |
| 2.2 | 2.15 |
| 2.3 | 2.26 |
| 2.4 | 2.39 |
| 2.5 | 2.51 |
| 2.6 | 2.64 |
| 2.7 | 2.76 |
| 2.8 | 2.89 |
| 2.9 | 3.02 |
| 3.0 | 3.15 |
| 3.1 | 3.28 |
| 3.2 | 3.41 |
| 3.3 | 3.54 |
| 3.4 | 3.68 |
| 3.5 | 3.81 |
| 3.6 | 3.95 |
| 3.7 | 4.09 |
| 3.8 | 4.24 |
| 3.9 | 4.39 |
| 4.0 | 4.55 |
| 4.1 | 4.71 |
| 4.2 | 4.88 |
| 4.3 | 5.05 |
| 4.4 | 5.23 |
| 4.5 | 5.42 |
| 4.6 | 5.62 |
| 4.7 | 5.83 |
| 4.8 | 6.05 |
| 4.9 | 6.27 |
| 5.0 | 6.51 |
| 5.1 | 6.75 |
| 5.2 | 7.00 |
| 5.3 | 7.26 |
| 5.4 | 7.53 |
| 5.5 | 7.80 |
| 5.6 | 8.06 |
| 5.7 | 8.33 |
| 5.8 | 8.59 |
| 5.9 | 8.84 |
| 6.0 | 9.08 |
| 6.1 | 9.30 |
| 6.2 | 9.50 |

## Flow diagrammes, DN 32

### LENO™ MSV-BD DN 32

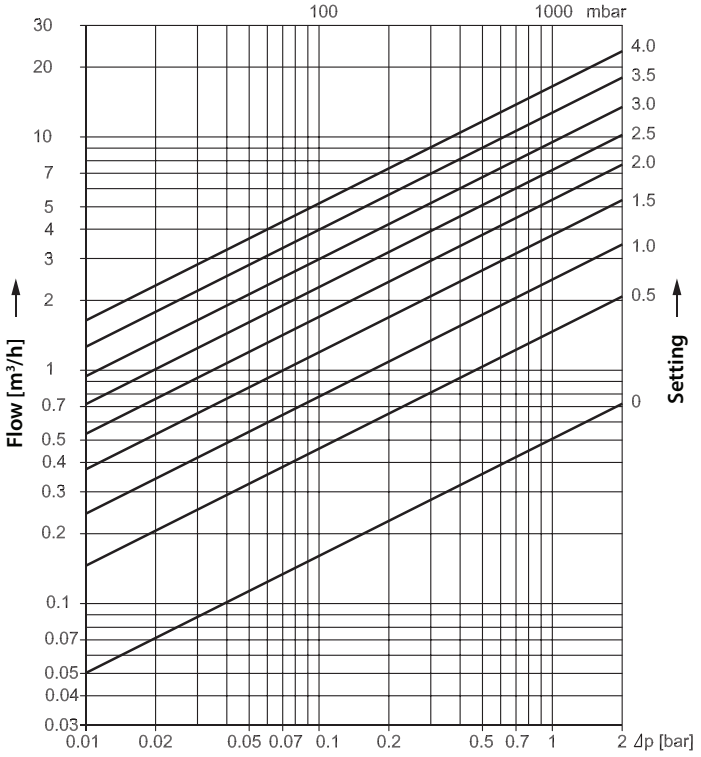


| Setting | $k_v$-value |
|---|---|
| 0.0 | 0.50 |
| 0.1 | 0.75 |
| 0.2 | 0.95 |
| 0.3 | 1.13 |
| 0.4 | 1.29 |
| 0.5 | 1.45 |
| 0.6 | 1.62 |
| 0.7 | 1.80 |
| 0.8 | 1.99 |
| 0.9 | 2.20 |
| 1.0 | 2.42 |
| 1.1 | 2.66 |
| 1.2 | 2.92 |
| 1.3 | 3.19 |
| 1.4 | 3.47 |
| 1.5 | 3.75 |
| 1.6 | 4.05 |
| 1.7 | 4.36 |
| 1.8 | 4.67 |
| 1.9 | 4.98 |
| 2.0 | 5.30 |
| 2.1 | 5.63 |
| 2.2 | 5.97 |
| 2.3 | 6.32 |
| 2.4 | 6.68 |
| 2.5 | 7.06 |
| 2.6 | 7.46 |
| 2.7 | 7.89 |
| 2.8 | 8.34 |
| 2.9 | 8.83 |
| 3.0 | 9.35 |
| 3.1 | 9.92 |
| 3.2 | 10.52 |
| 3.3 | 11.16 |
| 3.4 | 11.85 |
| 3.5 | 12.51 |
| 3.6 | 13.23 |
| 3.7 | 13.98 |
| 3.8 | 14.74 |
| 3.9 | 15.49 |
| 4.0 | 16.23 |
| 4.1 | 16.91 |
| 4.2 | 17.51 |
| 4.3 | 18.00 |

### Flow characteristics

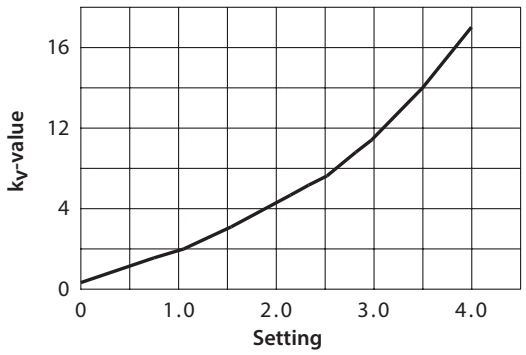



© Danfoss | 2020.08

## Flow diagrammes, DN 40

### LENO™ MSV-BD DN 40

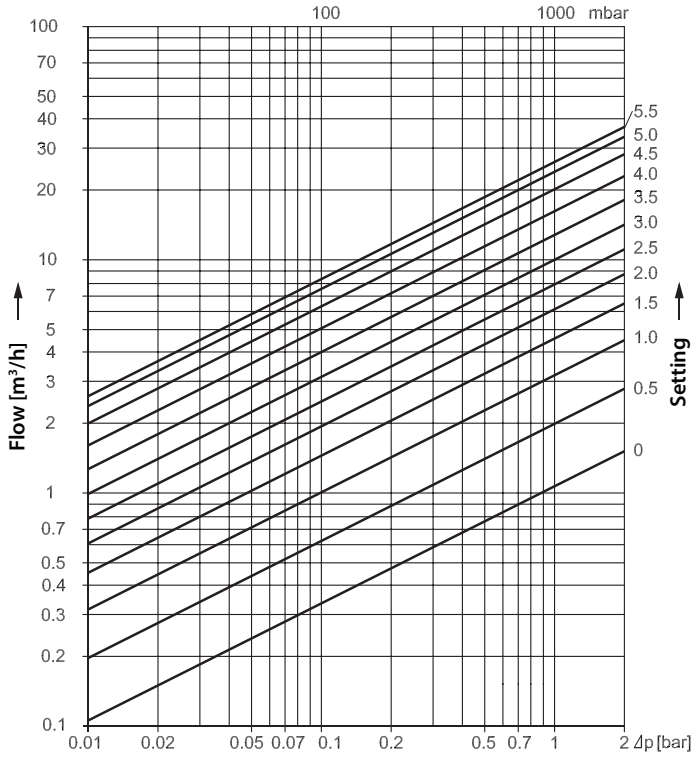


### Flow characteristics

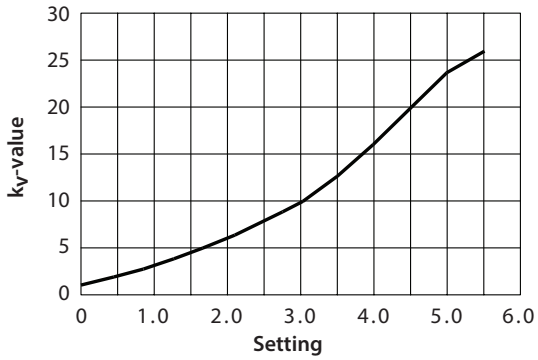


| Setting | $k_v$-value |
|---|---|
| 0.0 | 1.06 |
| 0.1 | 1.21 |
| 0.2 | 1.38 |
| 0.3 | 1.56 |
| 0.4 | 1.76 |
| 0.5 | 1.97 |
| 0.6 | 2.20 |
| 0.7 | 2.43 |
| 0.8 | 2.68 |
| 0.9 | 2.93 |
| 1.0 | 3.19 |
| 1.1 | 3.46 |
| 1.2 | 3.73 |
| 1.3 | 4.01 |
| 1.4 | 4.29 |
| 1.5 | 4.58 |
| 1.6 | 4.87 |
| 1.7 | 5.17 |
| 1.8 | 5.47 |
| 1.9 | 5.78 |
| 2.0 | 6.09 |
| 2.1 | 6.41 |
| 2.2 | 6.74 |
| 2.3 | 7.09 |
| 2.4 | 7.44 |
| 2.5 | 7.80 |
| 2.6 | 8.18 |
| 2.7 | 8.58 |
| 2.8 | 9.00 |
| 2.9 | 9.44 |
| 3.0 | 9.90 |
| 3.1 | 10.38 |
| 3.2 | 10.89 |
| 3.3 | 11.43 |
| 3.4 | 12.00 |
| 3.5 | 12.60 |
| 3.6 | 13.22 |
| 3.7 | 13.88 |
| 3.8 | 14.56 |
| 3.9 | 15.28 |
| 4.0 | 16.02 |
| 4.1 | 16.79 |
| 4.2 | 17.57 |
| 4.3 | 18.38 |
| 4.4 | 19.19 |
| 4.5 | 20.02 |
| 4.6 | 20.82 |
| 4.7 | 21.61 |
| 4.8 | 22.38 |
| 4.9 | 23.12 |
| 5.0 | 23.81 |
| 5.1 | 24.44 |
| 5.2 | 25.00 |
| 5.3 | 25.46 |
| 5.4 | 25.80 |
| 5.5 | 26.00 |

## Flow diagrammes, DN 50

**LENO™ MSV-BD DN 50**

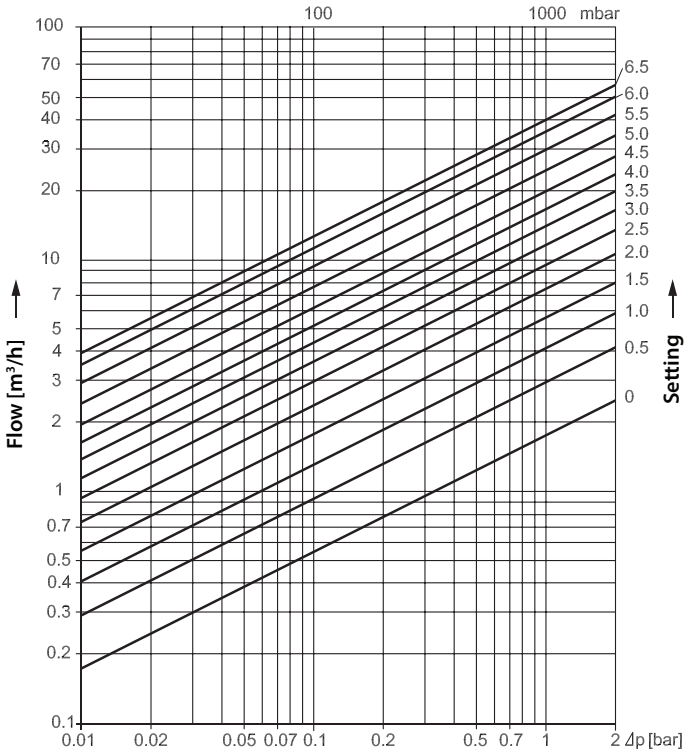


**Flow characteristics**

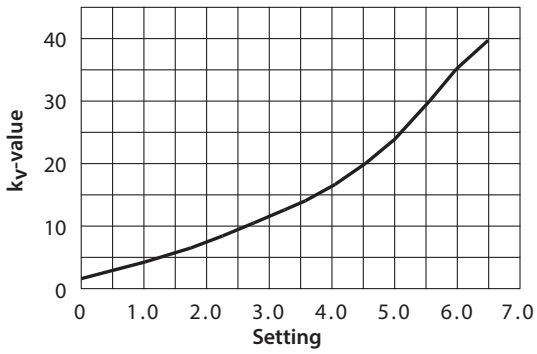


| Setting | $k_V$-value |
|---|---|
| 0.0 | 1.74 |
| 0.1 | 2.03 |
| 0.2 | 2.28 |
| 0.3 | 2.51 |
| 0.4 | 2.73 |
| 0.5 | 2.95 |
| 0.6 | 3.16 |
| 0.7 | 3.38 |
| 0.8 | 3.61 |
| 0.9 | 3.85 |
| 1.0 | 4.10 |
| 1.1 | 4.37 |
| 1.2 | 4.65 |
| 1.3 | 4.95 |
| 1.4 | 5.26 |
| 1.5 | 5.59 |
| 1.6 | 5.93 |
| 1.7 | 6.28 |
| 1.8 | 6.64 |
| 1.9 | 7.01 |
| 2.0 | 7.39 |
| 2.1 | 7.78 |
| 2.2 | 8.17 |
| 2.3 | 8.56 |
| 2.4 | 8.96 |
| 2.5 | 9.36 |
| 2.6 | 9.76 |
| 2.7 | 10.17 |
| 2.8 | 10.58 |
| 2.9 | 10.99 |
| 3.0 | 11.41 |
| 3.1 | 11.84 |
| 3.2 | 12.27 |
| 3.3 | 12.71 |
| 3.4 | 13.16 |
| 3.5 | 13.62 |
| 3.6 | 14.10 |
| 3.7 | 14.60 |
| 3.8 | 15.12 |
| 3.9 | 15.66 |
| 4.0 | 16.23 |
| 4.1 | 16.84 |
| 4.2 | 17.47 |
| 4.3 | 18.14 |
| 4.4 | 18.84 |
| 4.5 | 19.59 |
| 4.6 | 20.38 |
| 4.7 | 21.21 |
| 4.8 | 22.08 |
| 4.9 | 23.00 |
| 5.0 | 23.96 |
| 5.1 | 24.96 |
| 5.2 | 26.00 |
| 5.3 | 27.07 |
| 5.4 | 28.17 |
| 5.5 | 29.30 |
| 5.6 | 30.44 |
| 5.7 | 31.64 |
| 5.8 | 32.83 |
| 5.9 | 34.01 |
| 6.0 | 35.14 |
| 6.1 | 36.23 |
| 6.2 | 37.24 |
| 6.3 | 38.14 |
| 6.4 | 38.93 |
| 6.5 | 39.56 |
| 6.6 | 40.00 |


© Danfoss | 2020.08

## Dimensions

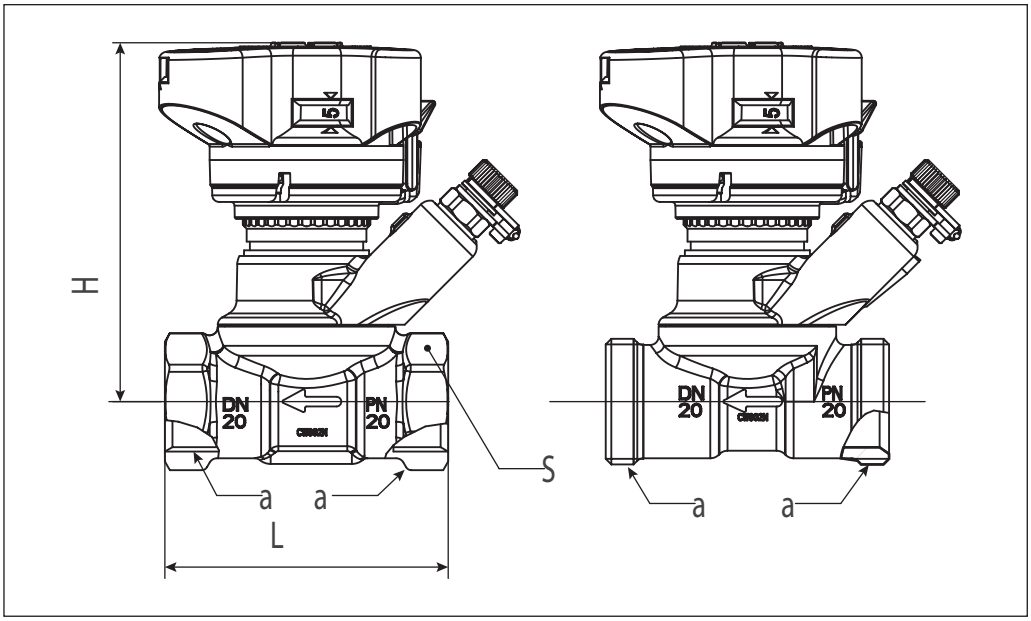


| MSV-BD | Size | a<br>Thread ISO 228-1 | L<br>(mm) | H<br>(mm) | S<br>(mm) |
|---|---|---|---|---|---|
| **003Z4000** | DN 15 LF | G ½ | 65 | 92 | 27 |
| **003Z4001** | DN 15 | G ½ | 65 | 92 | 27 |
| **003Z4002** | DN 20 | G ¾ | 75 | 95 | 32 |
| **003Z4003** | DN 25 | G 1 | 85 | 98 | 41 |
| **003Z4004** | DN 32 | G 1¼ | 98 | 121 | 50 |
| **003Z4005** | DN 40 | G 1½ | 100 | 125 | 55 |
| **003Z4006** | DN 50 | G 2 | 130 | 129 | 67 |
| **003Z4100** | DN 15 LF | G ¾ A | 70 | 92 | - |
| **003Z4101** | DN 15 | G ¾ | 70 | 92 | - |
| **003Z4102** | DN 20 | G 1 A | 75 | 95 | - |

## Tender specifications

LENO™ MSV –BD can be used in heating and cooling systems.

| Features | LENO™ MSV-BD |
|---|---|
| Balancing / Commissioning | • |
| Presetting | • |
| Fixed orifice | |
| Self sealing test plugs | • |
| Digital visible scale from more sides | • |
| Shut-off function (ball valve) | • |
| Draining / filling | • |
| Draining / filling on both sides of the valve | • |
| Removable handle | • |
| Closing indicator | • |
| Allen key for ball valve | • |
| Parallel test plugs | • |
| 360° rotating measuring station (drain tap and test plugs) | • |

Presetting values are visible on top of the valve and from all sides.
Presetting is locked by pressing down the handle. When locked, the shut-off function can be used without changing the presetting.
The handle is released with the green key or with a 3 mm Allen key.
To prevent unintended changes of the presetting, the handle can be sealed by using a strip.

The system can be drained and filled on both sides of the ball valve.

External thread versions comes in sizes DN 15 and DN 20 and are prepared for Danfoss standard fittings. DN 15 is designed with Euro cone, according to DIN V 3838.

LENO™ MSV-BD has a leakage rate A according to ISO 5208, the ball valve is 100% tight.

The LENO™ MSV-BD measuring accuracy is 8% at 25% of max. setting.
Accuracy is according to BS 7350 : 1990.

Measuring instruments must be equipped with Ø3 mm measuring needles. Danfoss measuring instruments PFM 1000 contain all relevant valve data.

Valve sizes. . . . . DN 15 (LF) – DN 50
Pressure class. . . . . PN20
Static test pressure . . . . . 30 bar
Working temperature. . . . . -20°C to 120°C
Working area . . . . . 10-100% of the $k_{VS}$-value

The valve body is made of DZR brass.
The ball is made of chromium plated brass.
*O-rings are made from EPDM rubber.*


© Danfoss | 2020.08

Data Sheet

# Manual Presetting Valves LENO™ MSV-O

## Description

LENO™ MSV-O is a new generation of manual valves for balancing flow in heating, cooling and domestic hot water systems.

LENO™ MSV-O is a combined presetting and shut off valve with a range of unique features:

- Fixed venturi orifice.
- Removable hand wheel for easy mounting.
- Numeric presetting scale, visible from more angles.
- Easy locking of presetting.
- Built-in measuring nipples for 3mm needles.
- Open-close with Allen key in emergency.
- Open-closed colour indicator.

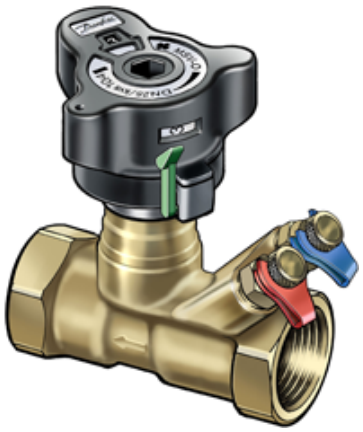

It is recommended to use LENO™ MSV-O in constant flow systems in front of boilers, flat stations or heat pumps in one-family houses for balancing, shut-off function for service and repair, flow verification, one pipe systems. The valve may be mounted in flow or return.

All dimensions are available with internal thread.

Danfoss PFM 5000/100 measuring instruments contain valve data for LENO™ MSV-O in memory.

## Application

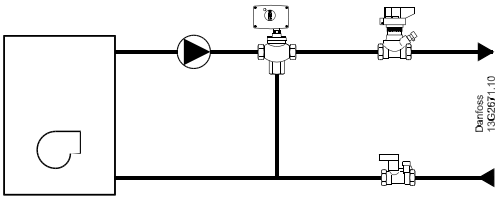


Boiler, flat station or heat pump in 1-family houses.

- For balancing.
- Shut-off function for service/repair.

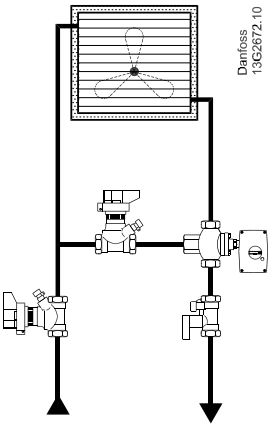


Air handling unit

- For constant flow.
- For balancing.
- Shut-off function for service/ repair.

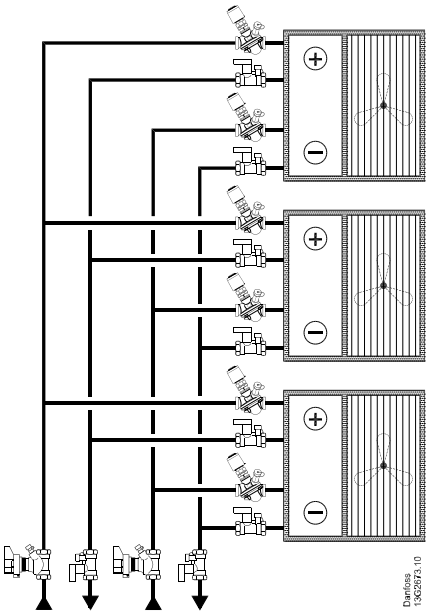


Fan coils

- For flow verification.
- Shut-off function for service/ repair.

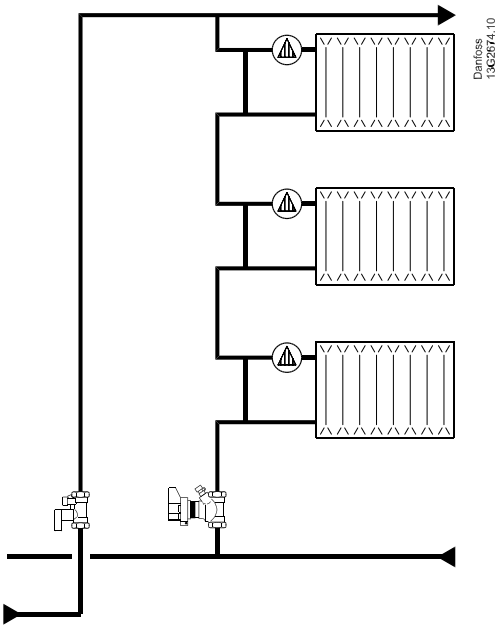


1-pipe system

- For balancing.
- Shut-off function for service/repair.

## Ordering

**LENO™ MSV-O valve with internal thread**

| Type | Material | Size | $k_{vs}$ ($m^3/h$) | Connection | **Code no.** |
|---|---|---|---|---|---|
| 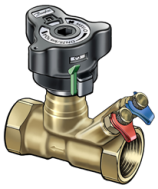 | DZR* Brass | DN 15 LF | 0.63 | $R_p$ ½" | **003Z4020** |
| | | DN 15 | 2.8 | $R_p$ ½" | **003Z4021** |
| | | DN 20 | 5.7 | $R_p$ ¾" | **003Z4022** |
| | | DN 25 | 9.7 | $R_p$ 1" | **003Z4023** |
| | | DN 32 | 16.6 | $R_p$ 1¼" | **003Z4024** |
| | | DN 40 | 25.4 | $R_p$ 1½" | **003Z4025** |
| | | DN 50 | 37.9 | $R_p$ 2" | **003Z4026** |

**Accessories**

| Type | **Code no.** |
|---|---|
| Standard measuring nipples, 2 pcs. | **003Z4662** |
| Extended measuring nipples, 60 mm, 2 pcs. | **003Z4657** |
| Operating handle | **003Z4652** |
| Flow measuring instrument PFM 100 | **003L8260** |
| Flow measuring instrument PFM 5000, PN10 | **003L8331** |
| Flow measuring instrument PFM 5000 Multi Source, PN10 | **003L8333** |
| Identification tag & strips, 10 pcs. | **003Z4660** |

## Design

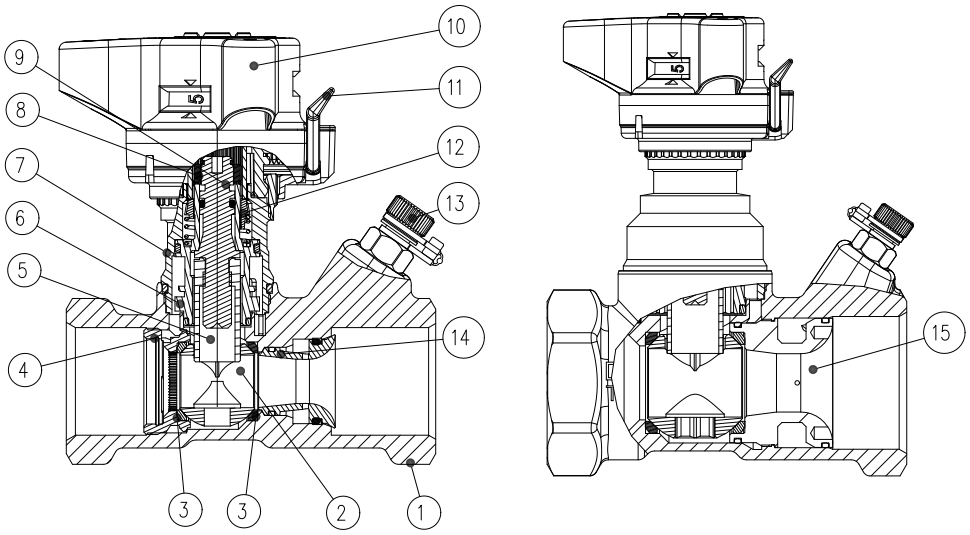


1. Valve house
2. Ball
3. Ball seat
4. Suppert screw
5. Throttle
6. Closing bush
7. Valve top
8. Spindle head
9. Spindle
10. Handle
11. Release lever
12. Rotation lock
13. Measuring nipple
14. Venturi
15. Suppert screw with venturi

## Technical Data

***Materials and parts in contact with water***

| | |
|---|---|
| Valve body | DZR brass |
| O-rings | EPDM |
| Ball | Brass/chromium plated |
| Ball sealing | Teflon |

| | |
|---|---|
| Max. static working pressure | 20 bar |
| Static test pressure | 30 bar |
| Max. differential pressure across valve | 2.5 bar (250 kPa) |
| Max. flow temperature | 120 °C |
| Min. temperature | -20°C |
| Cooling liquids | Ethylene glycol / propylene glycol and HYCOOL (max. 30 %) |

## Fitting

Before fitting the valve the installer must ensure that the pipe system is clean and:

1. the valve can be turned 360 degrees (if threaded pipe is used).
2. the valve is fitted according to the flow direction arrow.

| DN | R1/R2 (mm) |
|---|---|
| 15 | 96/58 |
| 20 | 99/60 |
| 25 | 101/63 |
| 32 | 124/87 |
| 40 | 127/90 |
| 50 | 131/94 |

### Removal of the handle

1. Set the handle at 0/0.
2. Release the setting lock (green).
3. Unscrew the union nut.

### Calibration of the handle

Before refitting, ensure that the handle setting is 0/0.

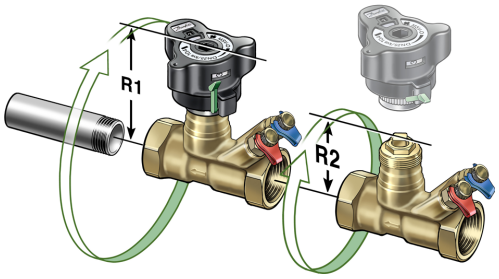


## Shut-Off

In order to shut-off the valve the handle must be pressed down.

The shut-off function features a ball valve, which only requires a 90 degree turn to shut the valve completely.

An indicator window shows the actual setting:

- red = closed
- white = open

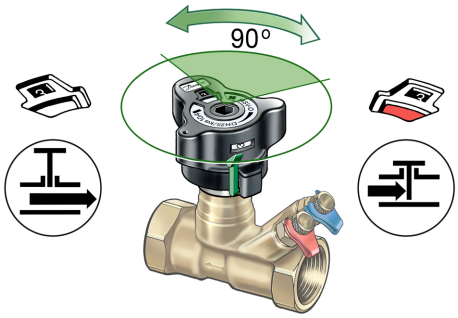


## Fixed Orifice

LENO™ MSV-O has a fixed venturi orifice in the valve body with constant $k_{vs}$-value. This feature makes it possible to read flow on the measuring device, without typing in presetting.

This feature saves time for commissioning for each valve installed.

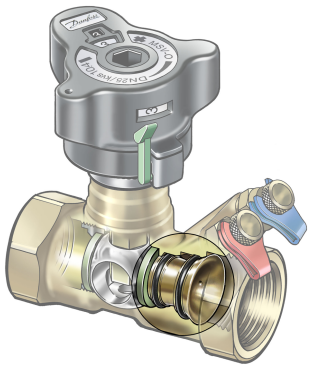

## Setting and Locking

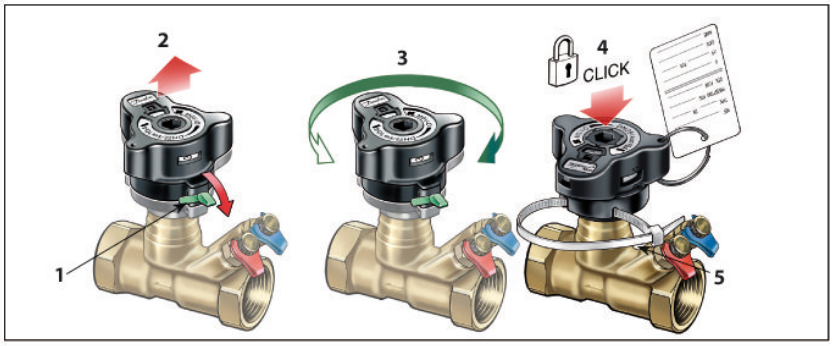


The valve has a built-in presetting feature for accurate flow ratings.

Setting the required flow is made in 5 steps:

1. Release the lock using the green lever or a 3 mm Allen key.
2. The handle pops up automatically.
3. The calculated value can now be set.
4. The setting is locked when the handled is pressed to click.
5. Seal - the setting can be protected by using a strip as shown.

## Measuring

The flow through the LENO™ MSV-O valve can be measured using Danfoss PFM 5000/100 or other brands of measuring instruments.
The LENO™ MSV-O valve is supplied with two measuring nipples for 3 mm needles. A twin bracket enables the user to connect both needles simultanously.

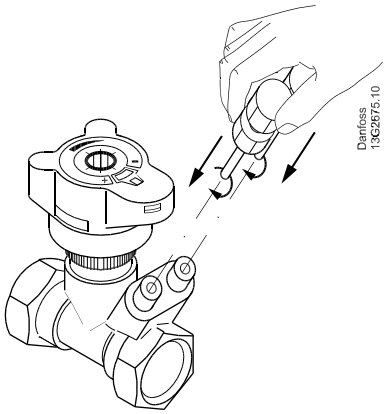


Procedure for flow measuring:

1. Select flow measuring
2. Select valve brand
3. Select valve type and dimension
4. Connect valve and instrument
5. Calibrate static pressure
6. Measure the flow

## Measuring Accuracy

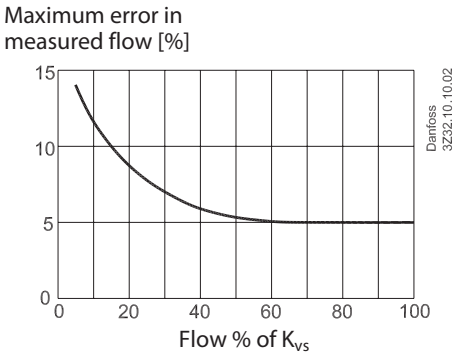


*The red line indicates 25% of max. flow.*

*According to BS7350:1990 flow rates must be within following values:*
*± 18 % at 25 % open position*
*± 10 % at fully open position*

LENO™ MSV-O is very accurate, due to the separate functions for presetting and shut-off.

## $K_v$-Signal

$K_v$-signal values are used for non-Danfoss measuring instruments. Danfoss PFM 3000*/4000 have all data in memory, and the instruments are using this formula:

$$\Delta P_{val} = \Delta P_{sig} \left( \frac{k_{v-sig}}{k_{v-val}} \right)^2$$

Δp across the measuring nipples ($k_{v\text{-}sig}$) and Δp across the valve ($k_{v\text{-}val}$) is not the same due to turbulence influence for pressure measuring.

** with software 9.4 or higher*

## $K_v$-Signal Values

| DN 15LF | DN 15 | DN20 | DN25 | DN32 | DN40 | DN50 |
|---|---|---|---|---|---|---|
| 0.356 | 1.434 | 3.453 | 5.80 | 10.33 | 14.72 | 22.94 |

## Sizing

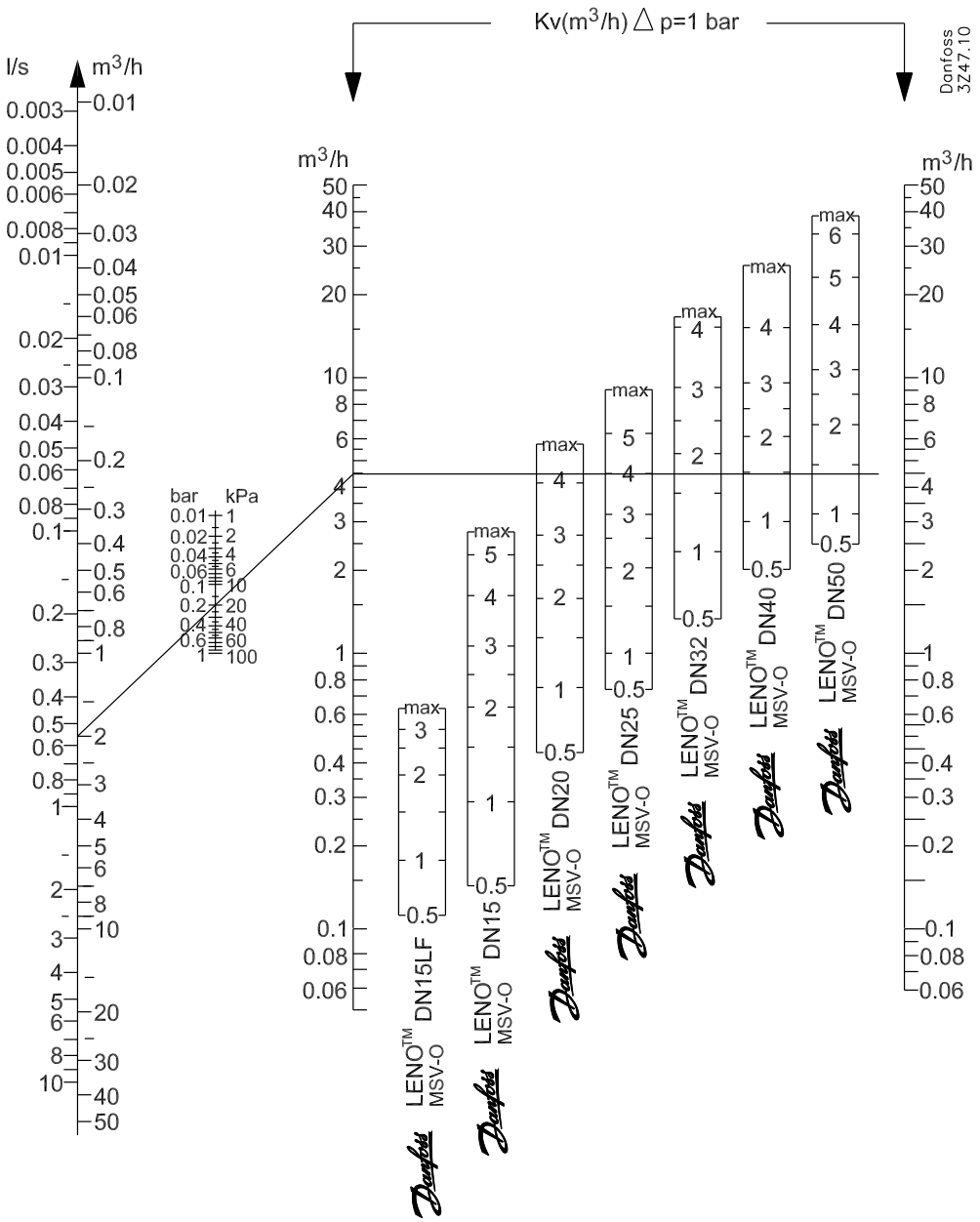

## Correction Factors

| Temp. °C | Correction factors, ethylene glycol / propylene glycol percentage (max. 30 %) | | | | | | |
|---|---|---|---|---|---|---|---|
| | 25 | 30 | 40 | 50 | 60 | 65 | 100 |
| -40.0 | 1) | 1) | 1) | 1) | 0.89 | 0.88 | 1) |
| -17.8 | 1) | 1) | 0.93 | 0.91 | 0.90 | 0.89 | 0.86 |
| 4.4 | 0.95 | **0.95** | 0.93 | 0.92 | 0.91 | 0.90 | 0.87 |
| 26.6 | 0.96 | 0.95 | 0.94 | 0.93 | 0.92 | 0.91 | 0.88 |
| 48.9 | 0.97 | 0.96 | 0.95 | 0.94 | 0.93 | 0.92 | 0.90 |
| 71.1 | 0.98 | 0.98 | 0.96 | 0.95 | 0.94 | 0.94 | 0.95 |
| 93.3 | 1.00 | 0.99 | 0.97 | 0.96 | 0.95 | 0.95 | 0.92 |
| 115.6 | 2) | 2) | 2) | 2) | 2) | 2) | 0.94 |

1) Below freezing point
2) Above boiling point

**Example:** Flow needed = 30 $m^3/h$
Flow after correction:
30 x 0.95 = 28 $m^3/h$

## Valve Size and Presetting

**Example:**

***Given***
Max. pipe flow Q = 2.0 $m^3/h$
$\Delta p_r$ = 15 kPa
$\Delta p_a$ = 45 kPa
$\Delta p_m$ = 10 kPa
$\Delta p_i$ = Δpa – Δpv – Δpm
$\Delta p_i$ = 45 kPa – 15 kPa – 10KPa = 20 kPa

Correct valve size and presetting is found in flow diagramme, page 7.

Q= 2.0 $m^3/h$ and $\Delta p_i$ = 20 kPa

On page 11 intersect guides and presetting is found to be 4.2 (DN 20 valve)

Setting can be also calculated from the formula:

$$k_v = \frac{Q\,[m^3/h]}{\sqrt{\Delta p_i\,[bar]}} = \frac{2.0}{\sqrt{0.20}} = 4.5\ m^3/h$$

which corresponds to presetting 4.2 as shown on pages 7 and 11.

**MSV-O**

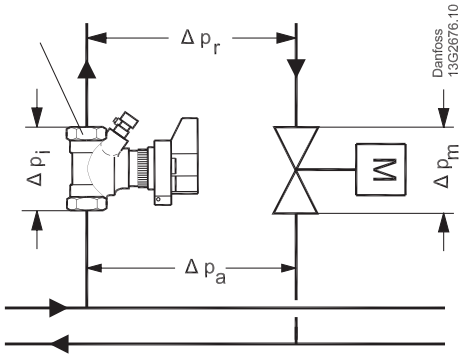


*$\Delta p_i$ Pressure drop across LENO™ MSV-O valve*
*$\Delta p_m$ Pressure drop across valve*
*$\Delta p_r$ Necessary pressure for the riser*
*$\Delta p_a$ Available pressure for the riser*

## Flow Diagrammes, DN 15 LF

### LENO™ MSV-O DN 15 LF

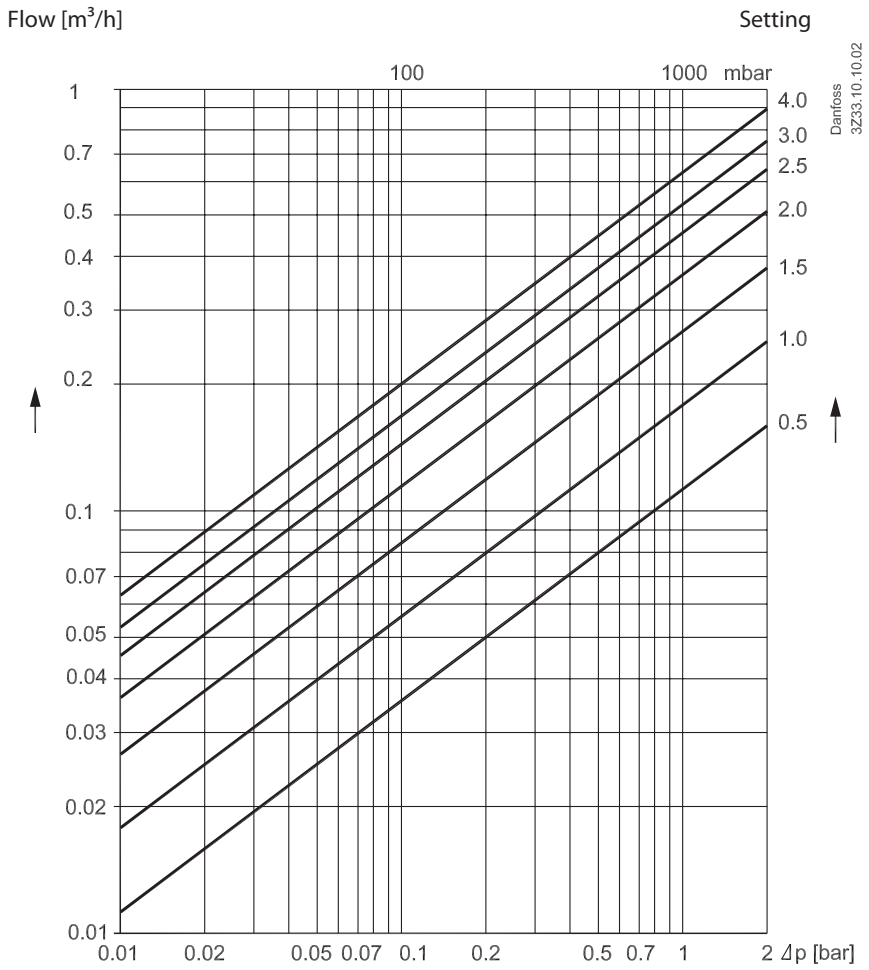


| Setting | DN15LF |
|---|---|
| 0.5 | 0.11 |
| 0.6 | 0.12 |
| 0.7 | 0.13 |
| 0.8 | 0.15 |
| 0.9 | 0.16 |
| 0.10 | 0.18 |
| 1.1 | 0.19 |
| 1.2 | 0.21 |
| 1.3 | 0.23 |
| 1.4 | 0.25 |
| 1.5 | 0.27 |
| 1.6 | 0.28 |
| 1.7 | 0.30 |
| 1.8 | 0.32 |
| 1.9 | 0.34 |
| 2.0 | 0.36 |
| 2.1 | 0.38 |
| 2.2 | 0.40 |

| Setting | DN15LF |
|---|---|
| 2.3 | 0.42 |
| 2.4 | 0.44 |
| 2.5 | 0.45 |
| 2.6 | 0.47 |
| 2.7 | 0.49 |
| 2.8 | 0.50 |
| 2.9 | 0.52 |
| 3.0 | 0.53 |
| 3.1 | 0.54 |
| 3.2 | 0.55 |
| 3.3 | 0.57 |
| 3.4 | 0.58 |
| 3.5 | 0.59 |
| 3.6 | 0.59 |
| 3.7 | 0.60 |
| 3.8 | 0.61 |
| 3.9 | 0.62 |
| 4.0 | 0.62 |
| 4.1 | 0.63 |

## Flow characteristics

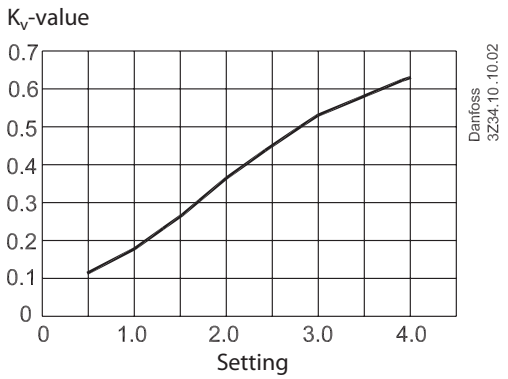

## Flow Diagrammes, DN 15

### LENO™ MSV-O DN 15

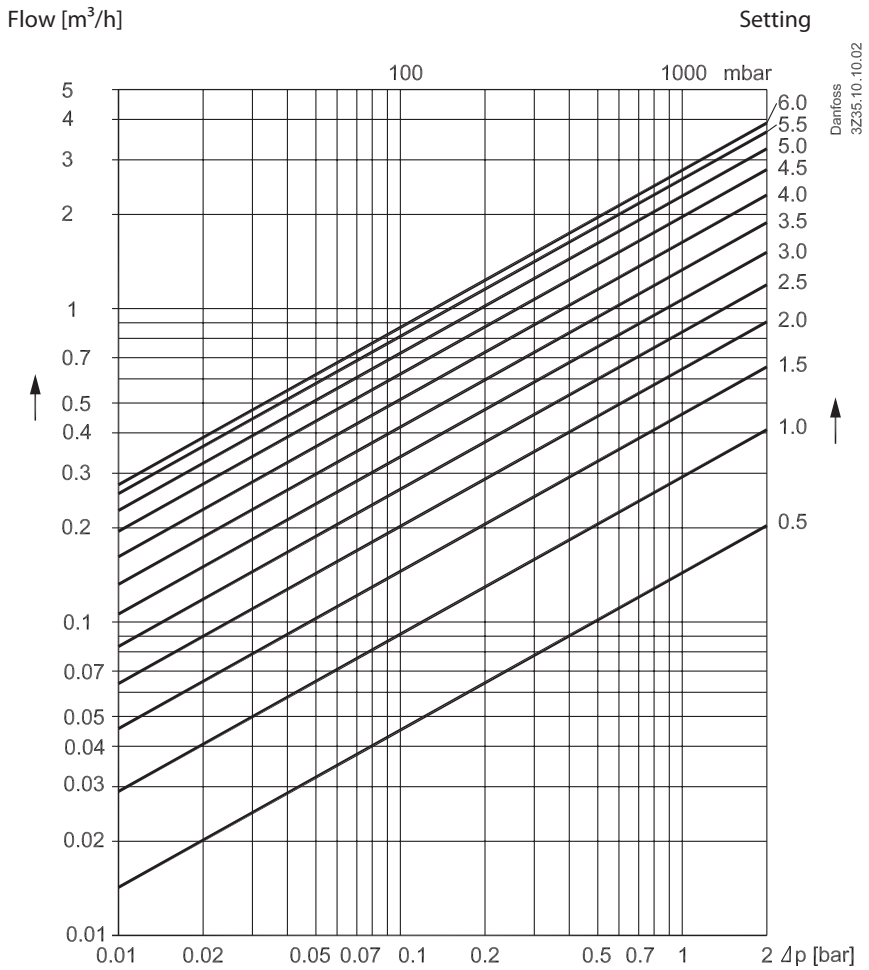


| Setting | DN15 |
|---|---|
| 0.5 | 0.14 |
| 0.6 | 0.17 |
| 0.7 | 0.20 |
| 0.8 | 0.23 |
| 0.9 | 0.26 |
| 0.10 | 0.29 |
| 1.1 | 0.32 |
| 1.2 | 0.35 |
| 1.3 | 0.39 |
| 1.4 | 0.42 |
| 1.5 | 0.46 |
| 1.6 | 0.49 |
| 1.7 | 0.53 |
| 1.8 | 0.56 |
| 1.9 | 0.60 |
| 2.0 | 0.64 |
| 2.1 | 0.68 |
| 2.2 | 0.72 |
| 2.3 | 0.75 |
| 2.4 | 0.80 |
| 2.5 | 0.84 |

| Setting | DN15 |
|---|---|
| 2.6 | 0.88 |
| 2.7 | 0.92 |
| 2.8 | 0.97 |
| 2.9 | 1.01 |
| 3.0 | 1.06 |
| 3.1 | 1.11 |
| 3.2 | 1.16 |
| 3.3 | 1.21 |

| Setting | DN15 |
|---|---|
| 3.4 | 1.27 |
| 3.5 | 1.32 |
| 3.6 | 1.38 |
| 3.7 | 1.44 |
| 3.8 | 1.50 |
| 3.9 | 1.56 |
| 4.0 | 1.62 |
| 4.1 | 1.68 |
| 4.2 | 1.75 |
| 4.3 | 1.81 |
| 4.4 | 1.88 |
| 4.5 | 1.94 |
| 4.6 | 2.01 |
| 4.7 | 2.08 |
| 4.8 | 2.15 |
| 4.9 | 2.21 |
| 5.0 | 2.28 |
| 5.1 | 2.34 |
| 5.2 | 2.40 |
| 5.3 | 2.46 |
| 5.4 | 2.51 |
| 5.5 | 2.57 |
| 5.6 | 2.61 |
| 5.7 | 2.65 |
| 5.8 | 2.69 |
| 5.9 | 2.72 |
| 6.0 | 2.74 |
| 6.1 | 2.75 |
| 6.2 | 2.80 |

## Flow characteristics

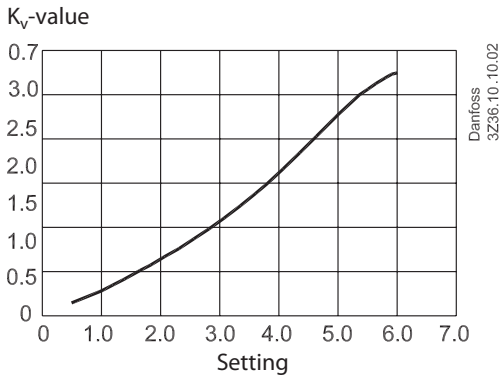

## Flow Diagrammes, DN 20

### LENO™ MSV-O DN 20

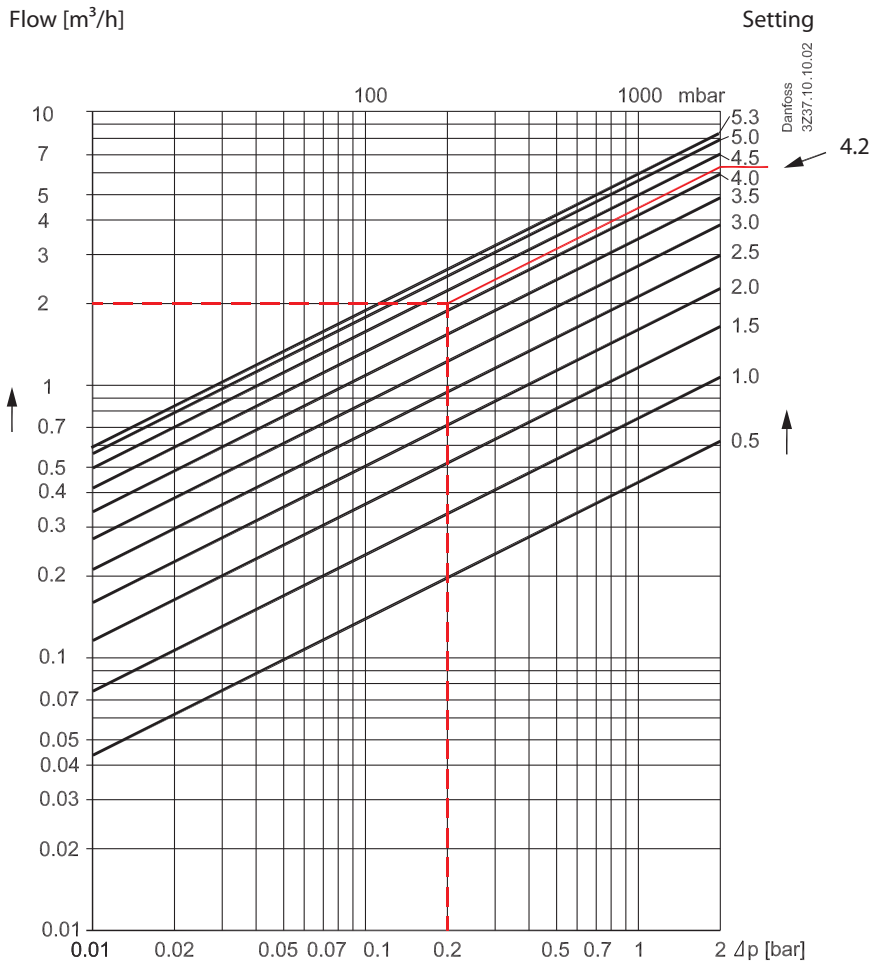


| Setting | DN20 |
|---|---|
| 0.5 | 0.44 |
| 0.6 | 0.49 |
| 0.7 | 0.55 |
| 0.8 | 0.61 |
| 0.9 | 0.68 |
| 0.10 | 0.75 |
| 1.1 | 0.82 |
| 1.2 | 0.90 |
| 1.3 | 0.98 |
| 1.4 | 1.06 |
| 1.5 | 1.14 |
| 1.6 | 1.22 |
| 1.7 | 1.31 |
| 1.8 | 1.40 |
| 1.9 | 1.49 |
| 2.0 | 1.58 |
| 2.1 | 1.68 |
| 2.2 | 1.77 |
| 2.3 | 1.88 |
| 2.4 | 1.98 |
| 2.5 | 2.09 |
| 2.6 | 2.20 |

| Setting | DN20 |
|---|---|
| 2.7 | 2.31 |
| 2.8 | 2.43 |

| Setting | DN20 |
|---|---|
| 2.9 | 2.56 |
| 3.0 | 2.68 |
| 3.1 | 2.81 |
| 3.2 | 2.95 |
| 3.3 | 3.09 |
| 3.4 | 3.23 |
| 3.5 | 3.38 |
| 3.6 | 3.53 |
| 3.7 | 3.68 |
| 3.8 | 3.83 |
| 3.9 | 3.99 |
| 4.0 | 4.15 |
| 4.1 | 4.31 |
| **4.2** | **4.47** |
| 4.3 | 4.62 |
| 4.4 | 4.78 |
| 4.5 | 4.93 |
| 4.6 | 5.07 |
| 4.7 | 5.21 |
| 4.8 | 5.34 |
| 4.9 | 5.46 |
| 5.0 | 5.57 |
| 5.1 | 5.61 |
| 5.2 | 5.66 |
| 5.3 | 5.70 |

## Flow characteristics

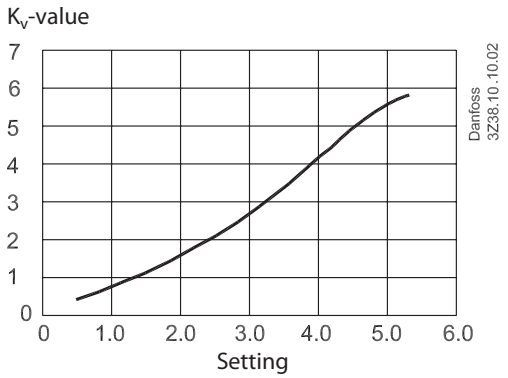

## Flow Diagrammes, DN 25

### LENO™ MSV-O DN 25

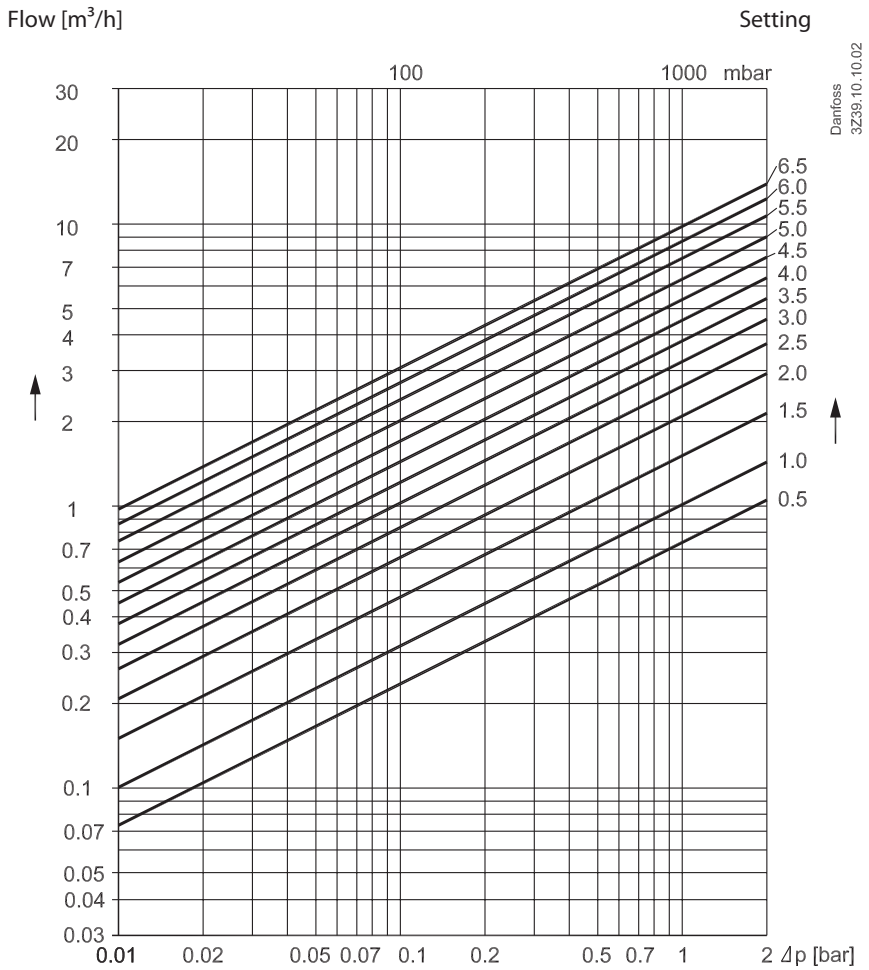


| Setting | DN25 |
|---|---|
| 0.5 | 0.74 |
| 0.6 | 0.76 |
| 0.7 | 0.80 |
| 0.8 | 0.86 |
| 0.9 | 0.92 |
| 0.10 | 1.00 |
| 1.1 | 1.08 |
| 1.2 | 1.18 |
| 1.3 | 1.27 |
| 1.4 | 1.38 |
| 1.5 | 1.48 |
| 1.6 | 1.59 |
| 1.7 | 1.70 |
| 1.8 | 1.81 |
| 1.9 | 1.93 |
| 2.0 | 2.04 |
| 2.1 | 2.16 |
| 2.2 | 2.27 |
| 2.3 | 2.39 |
| 2.4 | 2.50 |
| 2.5 | 2.61 |

| Setting | DN25 |
|---|---|
| 2.6 | 2.73 |
| 2.7 | 2.84 |
| 2.8 | 2.96 |
| 2.9 | 3.07 |
| 3.0 | 3.19 |
| 3.1 | 3.31 |
| 3.2 | 3.43 |
| 3.3 | 3.55 |
| 3.4 | 3.67 |

| Setting | DN25 |
|---|---|
| 3.5 | 3.80 |
| 3.6 | 3.93 |
| 3.7 | 4.06 |
| 3.8 | 4.20 |
| 3.9 | 4.34 |
| 4.0 | 4.49 |
| 4.1 | 4.64 |
| 4.2 | 4.80 |
| 4.3 | 4.96 |
| 4.4 | 5.13 |
| 4.5 | 5.30 |
| 4.6 | 5.49 |
| 4.7 | 5.67 |
| 4.8 | 5.87 |
| 4.9 | 6.07 |
| 5.0 | 6.27 |
| 5.1 | 6.49 |
| 5.2 | 6.70 |
| 5.3 | 6.93 |
| 5.4 | 7.16 |
| 5.5 | 7.39 |
| 5.6 | 7.62 |
| 5.7 | 7.86 |
| 5.8 | 8.10 |
| 5.9 | 8.34 |
| 6.0 | 8.57 |
| 6.1 | 8.81 |
| 6.2 | 9.04 |
| 6.3 | 9.26 |
| 6.4 | 9.48 |
| 6.5 | 9.70 |

## Flow characteristics

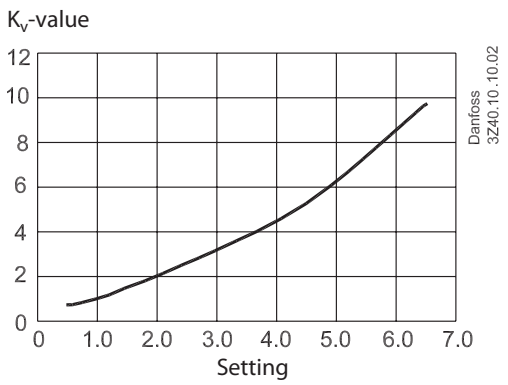

## Flow Diagrammes, DN 32

### LENO™ MSV-O DN 32

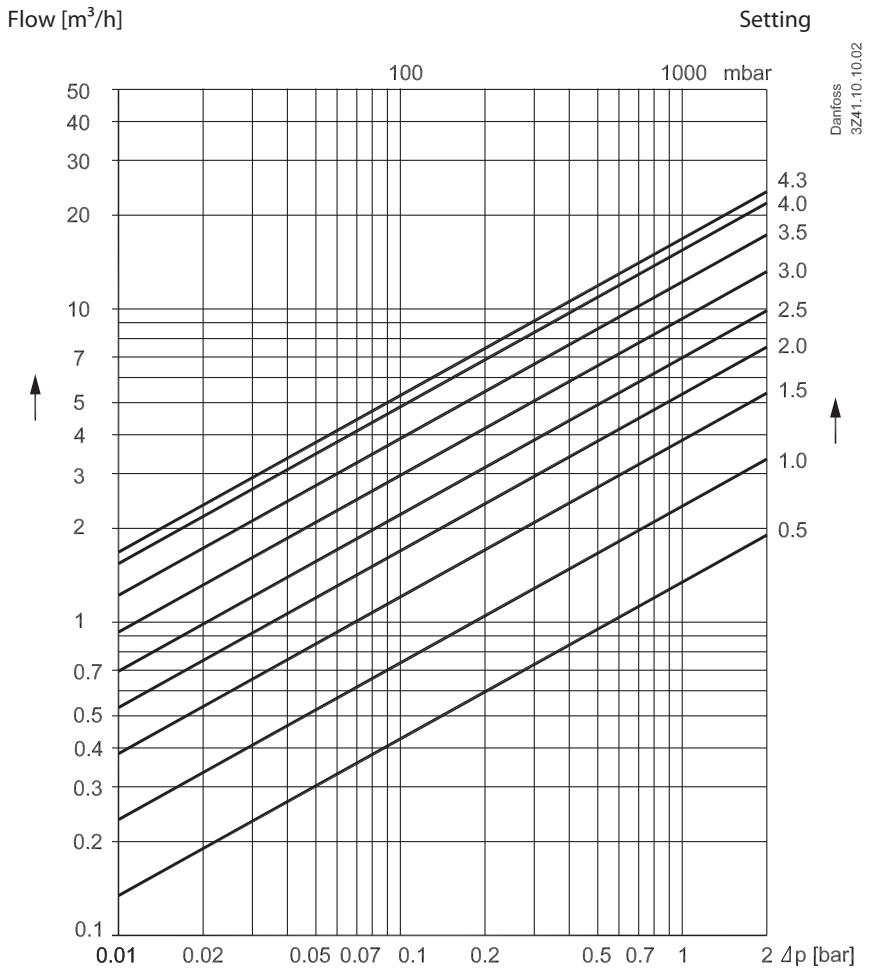


| Setting | DN32 |
|---|---|
| 0.5 | 1.33 |
| 0.6 | 1.44 |
| 0.7 | 1.61 |
| 0.8 | 1.82 |
| 0.9 | 2.07 |
| 0.10 | 2.34 |
| 1.1 | 2.62 |
| 1.2 | 2.91 |
| 1.3 | 3.21 |
| 1.4 | 3.51 |
| 1.5 | 3.81 |
| 1.6 | 4.11 |
| 1.7 | 4.40 |
| 1.8 | 4.70 |
| 1.9 | 5.00 |
| 2.0 | 5.30 |
| 2.1 | 5.61 |
| 2.2 | 5.93 |
| 2.3 | 6.26 |

| Setting | DN32 |
|---|---|
| 2.4 | 6.61 |
| 2.5 | 6.98 |
| 2.6 | 7.37 |
| 2.7 | 7.79 |
| 2.8 | 8.23 |
| 2.9 | 8.71 |
| 3.0 | 9.21 |
| 3.1 | 9.75 |
| 3.2 | 10.31 |
| 3.3 | 10.90 |
| 3.4 | 11.51 |
| 3.5 | 12.14 |
| 3.6 | 12.78 |
| 3.7 | 13.42 |
| 3.8 | 14.05 |
| 3.9 | 14.67 |
| 4.0 | 15.25 |
| 4.1 | 15.78 |
| 4.2 | 16.24 |
| 4.3 | 16.60 |

## Flow characteristics

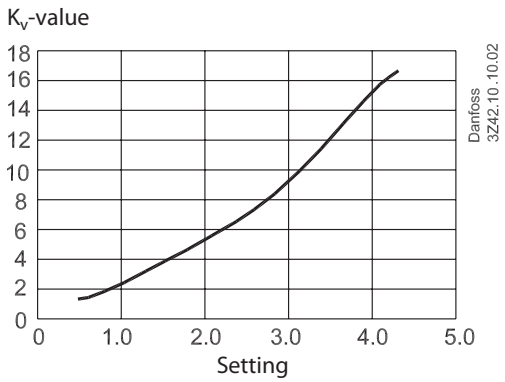

## Flow Diagrammes, DN 40

### LENO™ MSV-O DN 40

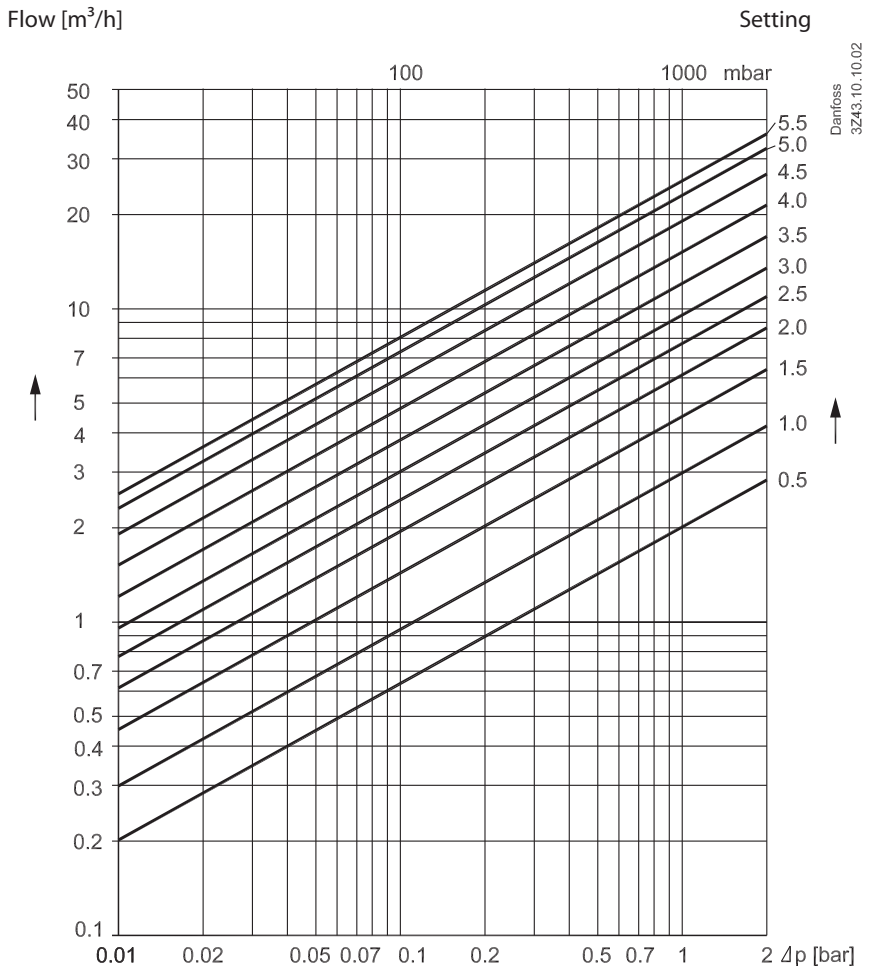


| Setting | DN40 |
|---|---|
| 0.5 | 2.02 |
| 0.6 | 2.13 |
| 0.7 | 2.29 |
| 0.8 | 2.50 |
| 0.9 | 2.74 |
| 0.10 | 3.00 |
| 1.1 | 3.29 |
| 1.2 | 3.59 |
| 1.3 | 3.90 |
| 1.4 | 4.22 |
| 1.5 | 5.54 |
| 1.6 | 5.85 |
| 1.7 | 5.17 |
| 1.8 | 5.49 |
| 1.9 | 5.80 |
| 2.0 | 6.12 |
| 2.1 | 6.43 |
| 2.2 | 6.75 |
| 2.3 | 7.06 |
| 2.4 | 7.39 |
| 2.5 | 7.72 |

| Setting | DN40 |
|---|---|
| 2.6 | 8.06 |
| 2.7 | 8.41 |
| 2.8 | 8.78 |
| 2.9 | 9.17 |

| Setting | DN40 |
|---|---|
| 3.0 | 9.57 |
| 3.1 | 10.00 |
| 3.2 | 10.46 |
| 3.3 | 10.94 |
| 3.4 | 11.46 |
| 3.5 | 12.00 |
| 3.6 | 12.57 |
| 3.7 | 13.18 |
| 3.8 | 13.82 |
| 3.9 | 14.49 |
| 4.0 | 15.19 |
| 4.1 | 15.92 |
| 4.2 | 16.67 |
| 4.3 | 17.45 |
| 4.4 | 18.24 |
| 4.5 | 19.04 |
| 4.6 | 19.84 |
| 4.7 | 20.64 |
| 4.8 | 21.43 |
| 4.9 | 22.19 |
| 5.0 | 22.92 |
| 5.1 | 23.60 |
| 5.2 | 24.22 |
| 5.3 | 24.76 |
| 5.4 | 25.20 |
| 5.5 | 25.40 |

## Flow characteristics

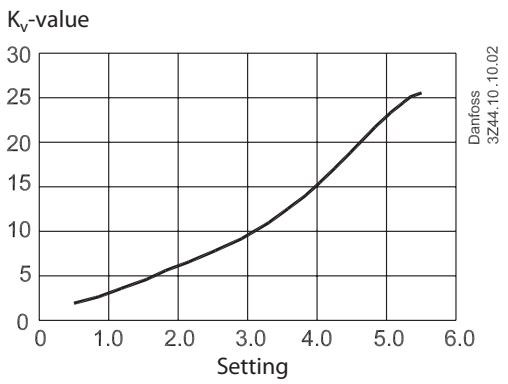

## Flow Diagrammes, DN 50

### LENO™ MSV-O DN 50

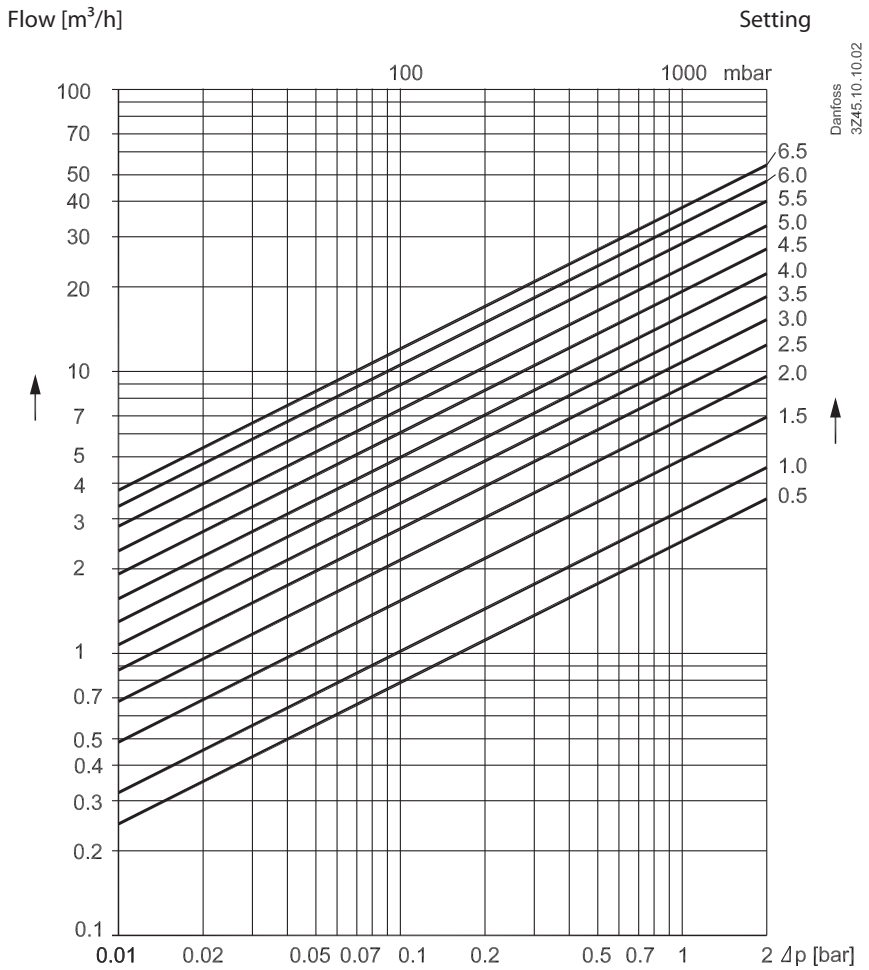


| Setting | DN50 |
|---|---|
| 0.5 | 2.49 |
| 0.6 | 2.52 |
| 0.7 | 2.61 |
| 0.8 | 2.76 |
| 0.9 | 2.96 |
| 0.10 | 3.20 |
| 1.1 | 3.48 |
| 1.2 | 3.79 |
| 1.3 | 4.12 |
| 1.4 | 4.47 |
| 1.5 | 4.83 |
| 1.6 | 5.21 |
| 1.7 | 5.59 |
| 1.8 | 5.97 |
| 1.9 | 6.36 |
| 2.0 | 6.75 |
| 2.1 | 7.14 |
| 2.2 | 7.53 |
| 2.3 | 7.92 |
| 2.4 | 8.31 |
| 2.5 | 8.70 |

| Setting | DN50 |
|---|---|
| 2.6 | 9.09 |
| 2.7 | 9.49 |
| 2.8 | 9.88 |
| 2.9 | 10.28 |
| 3.0 | 10.69 |
| 3.1 | 11.11 |
| 3.2 | 11.54 |
| 3.3 | 11.97 |
| 3.4 | 12.43 |

| Setting | DN50 |
|---|---|
| 3.5 | 12.90 |
| 3.6 | 13.39 |
| 3.7 | 13.90 |
| 3.8 | 14.43 |
| 3.9 | 14.99 |
| 4.0 | 15.57 |
| 4.1 | 16.18 |
| 4.2 | 16.83 |
| 4.3 | 17.50 |
| 4.4 | 18.2 |
| 4.5 | 18.94 |
| 4.6 | 19.71 |
| 4.7 | 20.52 |
| 4.8 | 21.35 |
| 4.9 | 22.22 |
| 5.0 | 23.12 |
| 5.1 | 24.05 |
| 5.2 | 25.01 |
| 5.3 | 25.99 |
| 5.4 | 27.00 |
| 5.5 | 28.02 |
| 5.6 | 29.05 |
| 5.7 | 30.09 |
| 5.8 | 31.14 |
| 5.9 | 32.18 |
| 6.0 | 33.21 |
| 6.1 | 34.22 |
| 6.2 | 35.20 |
| 6.3 | 36.15 |
| 6.4 | 37.04 |
| 6.5 | 37.90 |

## Flow characteristics

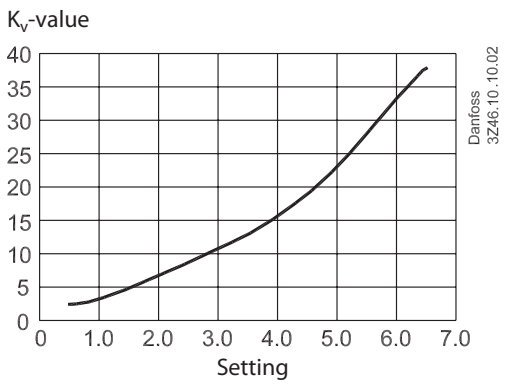

## Dimensions

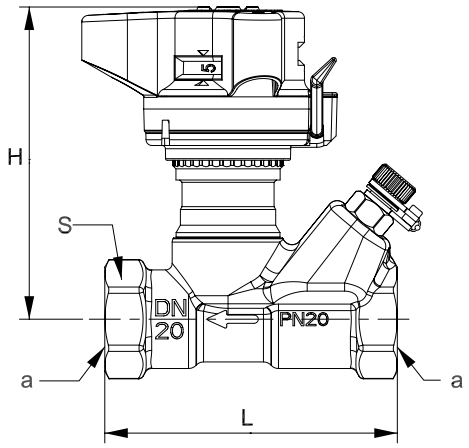


| Size (DN) | ISO 228-1 a (mm) | L (mm) | H (mm) | S (mm) |
|---|---|---|---|---|
| 15 | G ½ | 82 | 92 | 27 |
| 20 | G¾ | 89 | 95 | 32 |
| 25 | G 1 | 104 | 98 | 41 |
| 32 | G 1¼ | 122 | 121 | 50 |
| 40 | G 1½ | 122 | 125 | 55 |
| 50 | G2 | 151 | 129 | 67 |

ENGINEERING
TOMORROW

**Data sheet**

# Differential pressure controller (PN 16)

## **AVP** - return and flow mounting, adjustable setting
## **AVP-F** - return mounting, fixed setting

### Description

AVP AVP-F

AVP(-F) is a self-acting differential pressure controller primarily for use in district heating systems. The controller closes on rising differential pressure.
The controller has a control valve, an actuator with one control diaphragm and handle for differential pressure setting (fixed setting version is without handle).

**Main data:**
- DN 15-32
- $k_{VS}$ 0.4-10 m³/h
- PN 16
- Setting range (AVP):
  0.05-0.5 bar / 0.2-1.0 bar / 0.8-1.6 bar
- Fixed setting (AVP-F): 0.2 bar / 0.3 bar / 0.5 bar
- Temperature:
  - Circulation water / glycolic water up to 30%: 2 … 150 °C
- Connections:
  - Ext. thread (weld-on, thread and flange tailpieces)

### Ordering

**AVP** Controller (return mounting)

| Picture | DN (mm) | $k_{VS}$ (m³/h) | Connection | | Δp setting range (bar) | Code No. | Δp setting range (bar) | Code No. | Δp setting range (bar) | Code No. |
|---|---|---|---|---|---|---|---|---|---|---|
| | 15 | 1.6 | Cylindr. ext. thread acc. to ISO 228/1 | G ¾ A | 0.05-0.5 | **003H6200** | 0.2-1.0 | **003H6206** | 0.8-1.6 | **003H6212** |
| | | 2.5 | | | | **003H6201** | | **003H6207** | | **003H6213** |
| | | 4.0 | | | | **003H6202** | | **003H6208** | | **003H6214** |
| | 20 | 6.3 | | G 1 A | | **003H6203** | | **003H6209** | | **003H6215** |
| | 25 | 8.0 | | G 1¼ A | | **003H6204** | | **003H6210** | | **003H6216** |
| | 32 | 10 | | G 1¾ A | | **003H6205** | | **003H6211** | | **003H6217** |

*Example 1:*
*Differential pressure controller; return mounting; DN 15; $k_{VS}$ 1.6; PN 16; setting range 0.2-1.0 bar; $T_{max}$ 150 °C; ext. thread;*

- *1× AVP DN 15 controller*
  *Code No: **003H6206***
- *1× Impulse tube set AV, R ⅛*
  *Code No: **003H6852***

*Option:*
- *1× Weld-on tailpieces*
  *Code No: **003H6908***

*The controller will be delivered completely assembled, inclusive impulse tube between valve and actuator. External impulse tube (AV) must be ordered separately.*

**AVP** Controller (flow mounting)

| Picture | DN (mm) | $k_{VS}$ (m³/h) | Connection | | Δp setting range (bar) | Code No. | Δp setting range (bar) | Code No. |
|---|---|---|---|---|---|---|---|---|
| | 15 | 0.4 | Cylindr. ext. thread acc. to ISO 228/1 | G ¾ A | 0.05-0.5 | - | 0.2-1.0 | **003H6947** [1] |
| | | 1.0 | | | | - | | **003H6948** [1] |
| | | 1.6 | | | | **003H6238** | | **003H6244** |
| | | 2.5 | | | | **003H6239** | | **003H6245** |
| | | 4.0 | | | | **003H6240** | | **003H6246** |
| | 20 | 6.3 | | G 1 A | | **003H6241** | | **003H6247** |
| | 25 | 8.0 | | G 1¼ A | | **003H6242** | | **003H6248** |
| | 32 | 10 | | G 1¾ A | | **003H6243** | | **003H6249** |

[1] *This version of controller can be mounted in return or in flow pipe. When ordering 2 impulse tube sets AV (instead of 1) should be ordered (see ordering example 2).*

## Ordering *(continuous)*

**AVP-F** Controller (return mounting)

| Picture | DN (mm) | $k_{vs}$ ($m^3/h$) | Connection | | Δp setting range (bar) | Code No. | Δp setting range (bar) | Code No. | Δp setting range (bar) | Code No. |
|---|---|---|---|---|---|---|---|---|---|---|
| 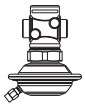 | 15 | 1.6 | Cylindr. ext. thread acc. to ISO 228/1 | G ¾ A | 0.2 | **003H6218** | 0.3 | **003H6224** | 0.5 | **003H6230** |
| | | 2.5 | | | | **003H6219** | | **003H6225** | | **003H6231** |
| | | 4.0 | | | | **003H6220** | | **003H6226** | | **003H6232** |
| | 20 | 6.3 | | G 1 A | | **003H6221** | | **003H6227** | | **003H6233** |
| | 25 | 8.0 | | G 1¼ A | | **003H6222** | | **003H6228** | | **003H6234** |
| | 32 | 10 | | G 1¾ A | | **003H6223** | | **003H6229** | | **003H6235** |

*Example 2:*
*Differential pressure controller; flow mounting; DN 15; $k_{vs}$ 0.4; PN 16; setting range 0.2-1.0 bar; $T_{max}$ 150 °C; ext. thread;*

- *1× AVP DN 15 controller*
  *Code No: **003H6947***
- *1× Impulse tube set AV, R ⅛*
  *Code No: **003H6852***

*Option:*
- *1× Weld-on tailpieces*
  *Code No: **003H6908***

*The controller will be delivered completely assembled, inclusive impulse tube between valve and actuator. External impulse tube (AV) must be ordered separately.*

## Accessories

| Picture | Type designation | DN | Connection | | Code No. |
|---|---|---|---|---|---|
| | Weld-on tailpieces | 15 | - | | **003H6908** |
| | | 20 | | | **003H6909** |
| | | 25 | | | **003H6910** |
| | | 32 | | | **003H6911** |
| | External thread tailpieces | 15 | Conical ext. thread acc. to EN 10226-1 | R ½ | **003H6902** |
| | | 20 | | R ¾ | **003H6903** |
| | | 25 | | R 1 | **003H6904** |
| | | 32 | | R 1¼ | **003H6905** |
| 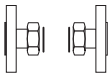 | Flange tailpieces | 15 | Flanges PN 25, acc. to EN 1092-2 | | **003H6915** |
| | | 20 | | | **003H6916** |
| | | 25 | | | **003H6917** |
| 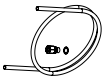 | Impulse tube set AV | Description:<br>- 1× copper tube Ø 6 × 1 × 1500 mm<br>- 1× compression fitting [1] for imp. tube connection to pipe Ø 6 × 1 mm | | R ⅛ | **003H6852** |
| | | | | R ⅜ | **003H6853** |
| | | | | R ½ | **003H6854** |
| | [1] 10 compression fittings for imp. tube connection to pipe, Ø 6 × 1 mm R ⅛ | | | | **003H6857** |
| | [1] 10 compression fittings for imp. tube connection to pipe, Ø 6 × 1 mm R ⅜ | | | | **003H6858** |
| | [1] 10 compression fittings for imp. tube connection to pipe, Ø 6 × 1 mm R ½ | | | | **003H6859** |
| | [1] 10 compression fittings for imp. tube connection to actuator, Ø 6 × 1 mm G ⅛ | | | | **003H6931** |
| | Shut off valve Ø 6 mm | | | | **003H0276** |

[1] *Compression fitting consists of a nipple, compression ring and nut.*

## Service kits

| Picture | Type designation | DN | $k_{vs}$ ($m^3/h$) | Code No. AVP(-F) return | Code No. AVP(-F) flow |
|---|---|---|---|---|---|
| | Valve insert | 15 | 0.4 | - | **003H6869** |
| | | | 1.0 | - | **003H6870** |
| | | | 1.6 | **003H6863** | **003H6871** |
| | | | 2.5 | **003H6864** | **003H6872** |
| | | | 4.0 | **003H6865** | **003H6873** |
| | | 20 | 6.3 | **003H6866** | **003H6874** |
| | | 25 | 8.0 | **003H6867** | **003H6875** |
| | | 32 | 10 | | |

| Picture | Type designation | Δp setting range (bar) | Code No. AVP(-F) return | Code No. AVP(-F) flow |
|---|---|---|---|---|
| | Actuator with adjustable handle (AVP) | 0.05-0.5 | **003H6821** | **003H6823** |
| | | 0.2-1.0 | **003H6822** | **003H6824** |
| | | 0.8-1.6 | | |
| | Actuator without adjustable handle (AVP-F) | 0.2 | **003H6825** | - |
| | | 0.3 | | |
| | | 0.5 | | |


© Danfoss | 2019.02

## Technical data

### Valve

| Nominal diameter | | DN | 15 | | | | | 20 | 25 | 32 |
|---|---|---|---|---|---|---|---|---|---|---|
| $k_{VS}$ value | | m³/h | 0.4 | 1.0 | 1.6 | 2.5 | 4.0 | 6.3 | 8.0 | 10 |
| Cavitation factor z | | | ≥ 0.6 | | | | | | ≥ 0.55 | |
| Leakage acc. to standard IEC 534 | | % of $k_{VS}$ | ≤ 0.02 | | | | | | | ≤ 0.05 |
| Nominal pressure | | PN | 25 | | | | | | | |
| Max. differential pressure | | bar | 12 | | | | | | | |
| Medium | | | Circulation water / glycolic water up to 30% | | | | | | | |
| Medium pH | | | Min. 7, Max. 10 | | | | | | | |
| Medium temperature | | °C | 2…150 | | | | | | | |
| Connections | valve | | Extternal thread | | | | | | | |
| | tailpieces | | Weld-on and external thread | | | | | | | |
| | | | Flange | | | | | | | - |
| **Materials** | | | | | | | | | | |
| Valve body | | | Red bronze CuSn5ZnPb (Rg5) | | | | | | | |
| Valve seat | | | Stainless steel, mat. No. 1.4571 | | | | | | | |
| Valve cone | | | Dezincing free brass CuZn36Pb2As | | | | | | | |
| Sealing | | | EPDM | | | | | | | |
| Pressure relieve system | | | Piston | | | | | | | |

### Actuator

| Type | | AVP | | | AVP-F | | |
|---|---|---|---|---|---|---|---|
| Actuator size | cm² | 39 | | | | | |
| Nominal pressure | PN | 16 | | | | | |
| Diff. pressure setting ranges and spring colours | bar | 0.05-0.5 | 0.2-1.0 | 0.8-1.6 | 0.2 | 0.3 | 0.5 |
| | | grey | black | | (fixed setting) | | |
| **Materials** | | | | | | | |
| Actuator housing | | Zinc plated, DIN 1624, No. 1.0338 | | | | | |
| Diaphragm | | EPDM | | | | | |
| Impulse tube | | Copper tube Ø 6 x 1 mm | | | | | |

## Application principles

*- Return mounting*

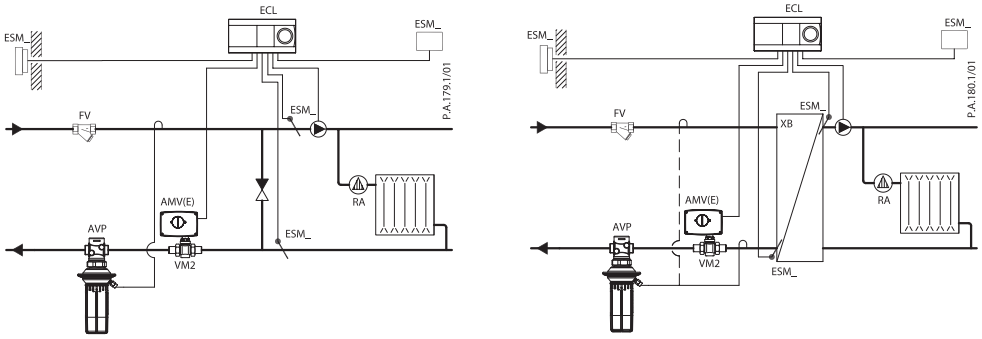


*Direct-connected heating system* *Indirectly connected heating system*

## Application principles
*- Flow mounting*

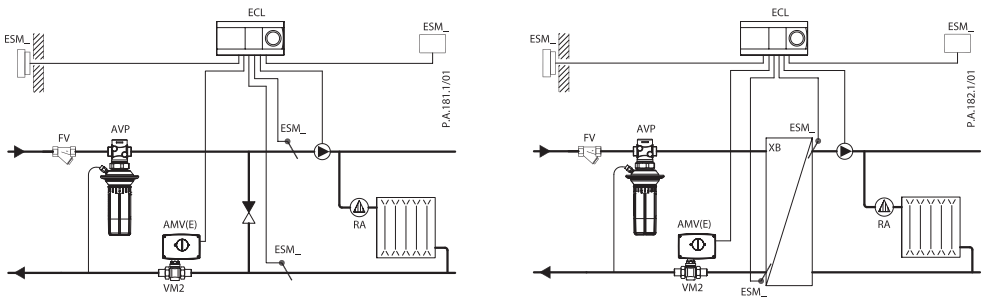


*Direct-connected heating system* *Indirectly connected heating system*

## Installation positions

Up to medium temperature of 100 °C the controllers can be installed in any position.

For higher temperatures the controllers have to be installed in horizontal pipes only, with a pressure actuator oriented downwards.

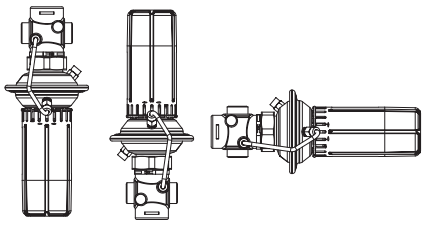

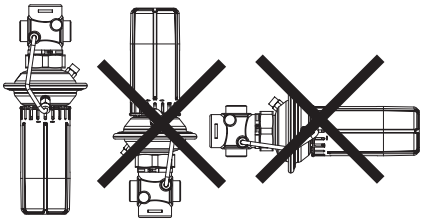

## Pressure temperature diagram

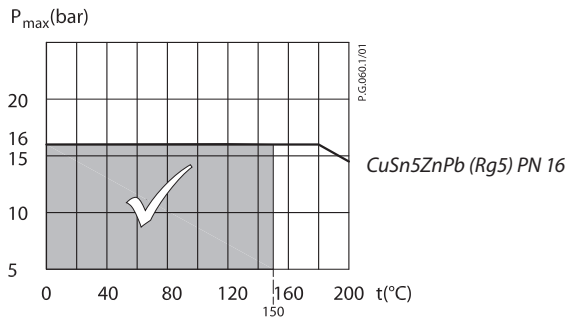


*Maximum allowed operating pressure as a function of medium temperature (according to EN 1092-3).*


© Danfoss | 2019.02

## Sizing

- *Directly connected heating system*

**Example 1**
Motorised control valve (MCV) for mixing circuit in direct-connected heating system requires differential pressure of 0.2 bar (20 kPa).

Given data:
$Q_{max}$ = 1.3 m³/h (1300 l/h)
$\Delta p_{min}$ = 0.7 bar (70 kPa)
*$\Delta p_{circuit}$ = 0.1 bar (10 kPa)
$\Delta p_{MCV}$ = 0.2 bar (20 kPa) selected

*Remark
$\Delta p_{circuit}$ corresponds to the required pump pressure in the heating circuit and is not to be considered when sizing the AVP

The differential pressure set value is:
$\Delta p_{set\ value} = \Delta p_{MCV}$
$\Delta p_{set\ value} = 0.2$ bar (20 kPa)

The total pressure loss across the controller is:
$\Delta p_{AVP} = \Delta p_{min} - \Delta p_{MCV} = 0.7 - 0.2$
$\Delta p_{AVP} = 0.5$ bar (50 kPa)

Possible pipe pressure losses in tubes, shut-off fittings, heatmeters, etc. are not included.

$k_v$ value is calculated according to formula:

$$k_v = \frac{Q_{max}}{\sqrt{\Delta p_{AVP}}} = \frac{1.3}{\sqrt{0.5}}$$

$k_v = 1.8$ m³/h

or read from the sizing diagram, page 7, by taking a line from Q-scale (1.3 m³/h) through $\Delta p_v$-scale (0.5 bar) to intersect $k_v$-scale at 1.8 m³/h.

*Solution:*
The example selects AVP DN 15, $k_{VS}$ value 2.5, with differential pressure setting range 0.05-0.5 bar.

The P-band (Xp) can also be read from the sizing diagram. Take a horizontal line from the $k_v$-scale (1.8 m³/h) to the right to intersect the $X_p$-scale (0.04 bar). At a set value of 0.2 bar and a $X_p$ of 0.04 bar the AVP controller controls between 0.2 bar with open motorised control valve and 0.2 + 0.04 = 0.24 bar at almost closed motorised control valve (i.e. total pressure loss across the motorised control valve).

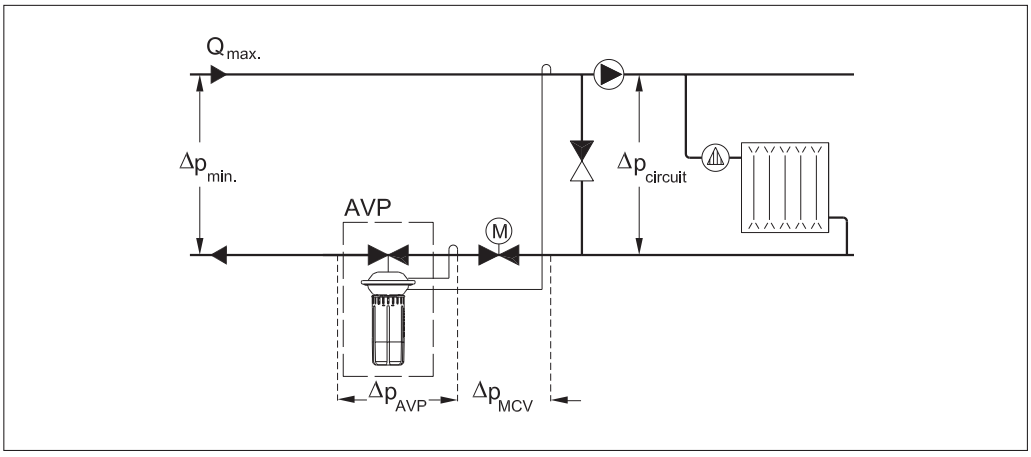


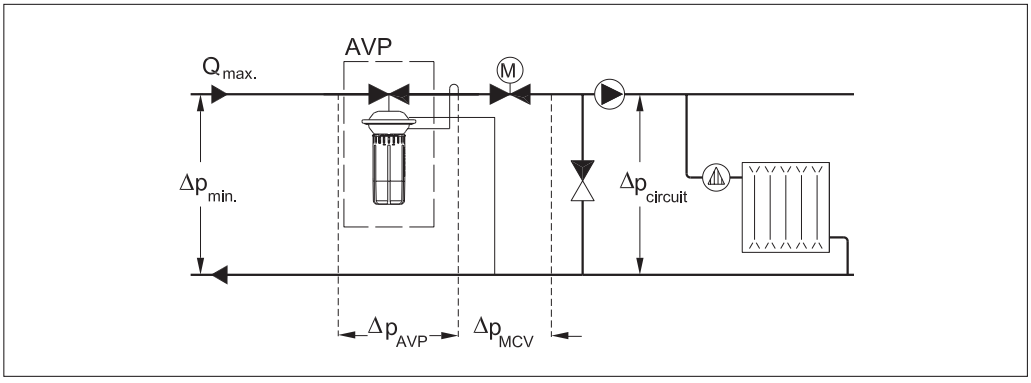

**Sizing** *(continuous)*

- *Indirectly connected heating system*

**Example 2**
Motorised control valve (MCV) for indirectly connected heating system requires differential pressure of 0.3 (30 kPa) bar.

Given data:
$Q_{max}$ = 0.8 m³/h (800 l/h)
$\Delta p_{min}$ = 0.8 bar (80 kPa)
$\Delta p_{exchanger}$ = 0.05 bar (5 kPa)
$\Delta p_{MCV}$ = 0.3 bar (30 kPa) selected

The differential pressure set value is:
$\Delta p_{set\ value} = \Delta p_{exchanger} + \Delta p_{MCV} = 0.05 + 0.3$
$\Delta p_{set\ value} = 0.35$ bar (35 kPa)

The total pressure loss across the controller is:
$\Delta p_{AVP} = \Delta p_{min} - \Delta p_{exchanger} - \Delta p_{MCV}$
$= 0.8 - 0.05 - 0.3$
$\Delta p_{AVP} = 0.45$ bar (45 kPa)

Possible pipe pressure losses in tubes, shut-off fittings, heatmeters, etc. are not included.

$k_v$ value is calculated according to formula:

$$k_v = \frac{Q_{max}}{\sqrt{\Delta p_{AVP}}} = \frac{0.8}{\sqrt{0.45}}$$

$k_v = 1.2$ m³/h

or read from the sizing diagram, page 7, by taking a line from Q-scale (0.8 m³/h) through $\Delta p_v$-scale (0.45 bar) to intersect $k_v$-scale at 1.2 m³/h.

Solution:
The example selects AVP DN 15, $k_{VS}$ value 1.6, with differential pressure setting range 0.05-0.5 bar.

The P-band ($X_P$) can also be read from the sizing diagram. Take a horizontal line from the $k_v$-scale (1.2 m³/h) to the right to intersect the $X_P$-scale (0.04 bar). At a set value of 0.35 bar and a $X_P$ of 0.04 bar the AVP controller controls between 0.35 bar with open motorised control valve and 0.35 + 0.04 = 0.39 bar at almost closed motorised control valve (i.e. total pressure loss across the motorised control valve).

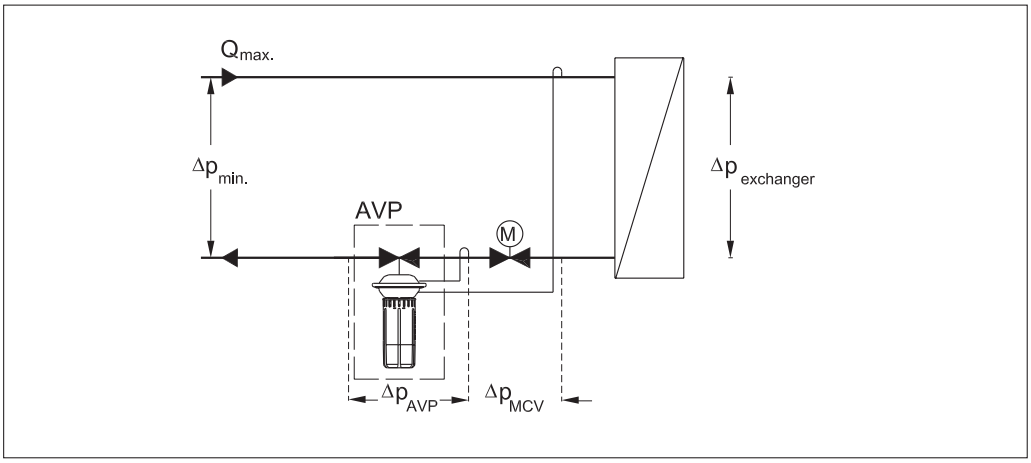


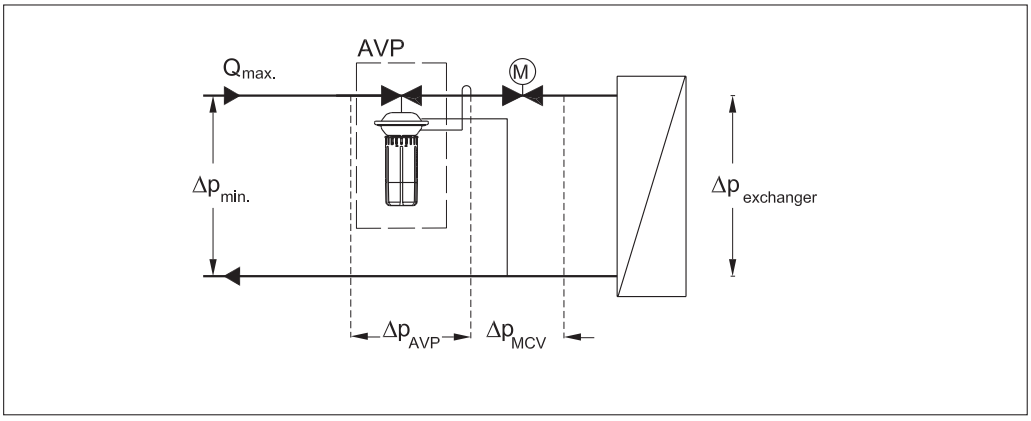


 © Danfoss | 2019.02

**Sizing** *(continuous)*

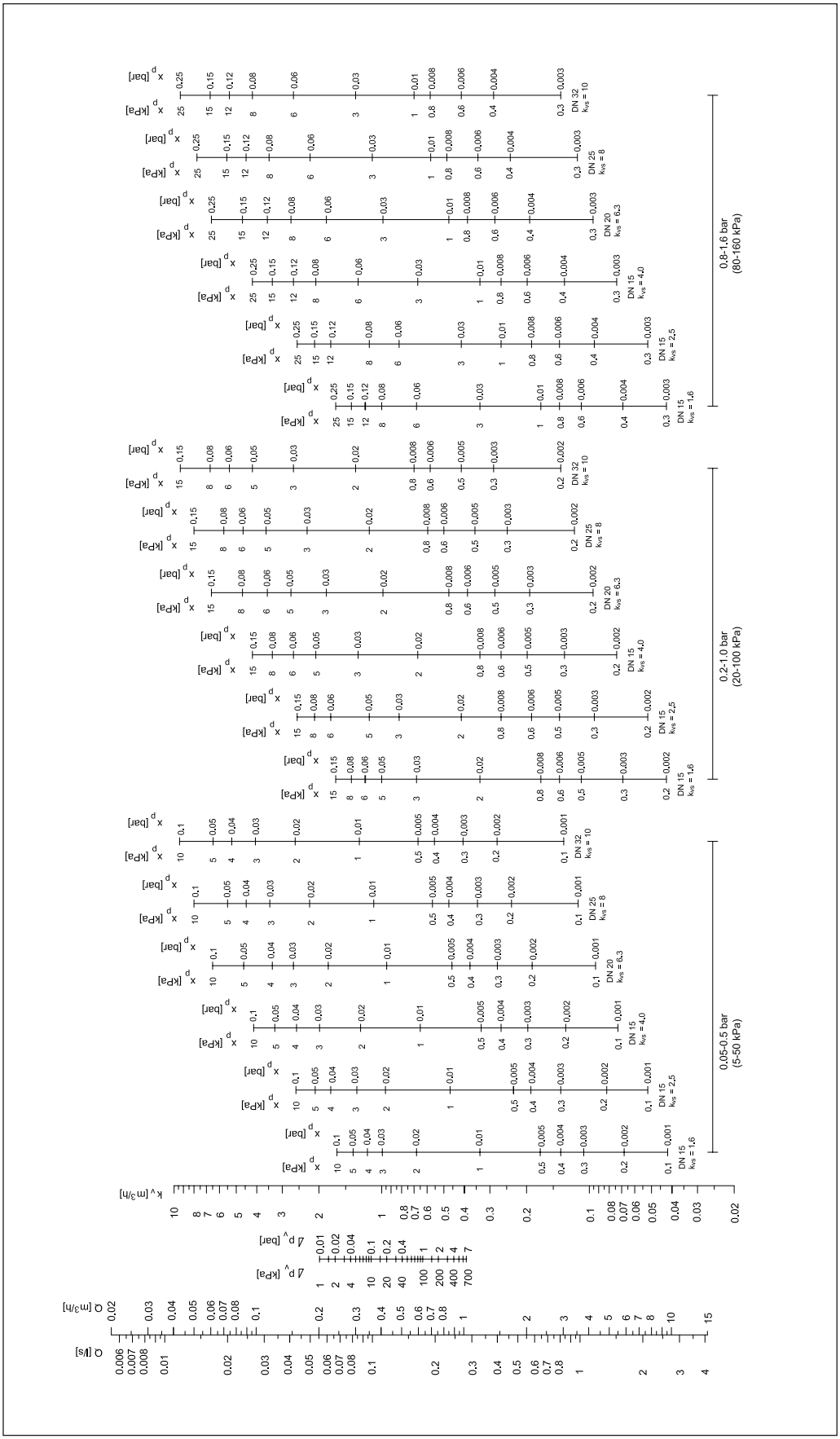


Select suitable controller size. Xp should not exceed 50% of the controller differential pressure setting.

## Design

1. Valve body
2. Valve insert
3. Pressure relieved valve cone
4. Valve stem
5. Control drain
6. Actuator
7. Control diaphragm for diff. pressure control
8. Setting spring for diff. pressure control
9. Handle for diff. pressure setting, prepared for sealing
10. Union nut
11. Compression fitting for impulse tube
12. Excess pressure safety valve

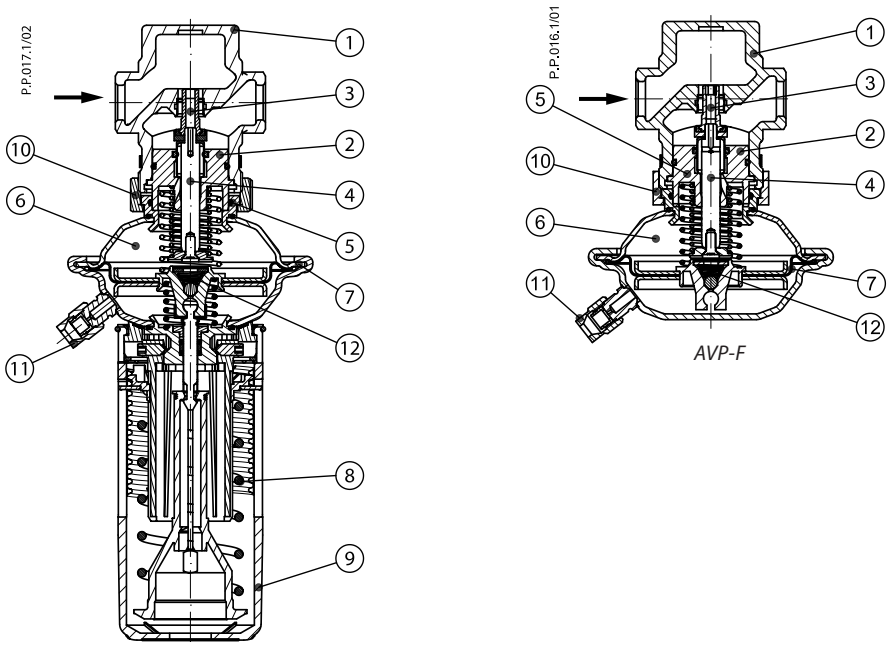


## Function

Pressure changes from flow and return pipes are being transferred through the impulse tubes and/or control drain in the actuator stem to the actuator chambers and act on control diaphragm for diff. pressure control. The diff. pressure is controlled by means of setting spring for diff. pressure control. Control valve closes on rising differential pressure and opens on falling differential pressure to maintain constant differential pressure.

Controller is equipped with excess pressure safety valve, which protects control diaphragm for diff. pressure control from too high differential pressure.

## Settings

*Differential pressure setting*
Differential pressure setting (valid for AVP controller only) is being done by the adjustment of the setting spring for diff. pressure control. The adjustment can be done by means of handle for diff. pressure setting and/or pressure indicators.

## Adjustment diagram

*Relation between scale figures and differential pressure. Values given are approximate.*

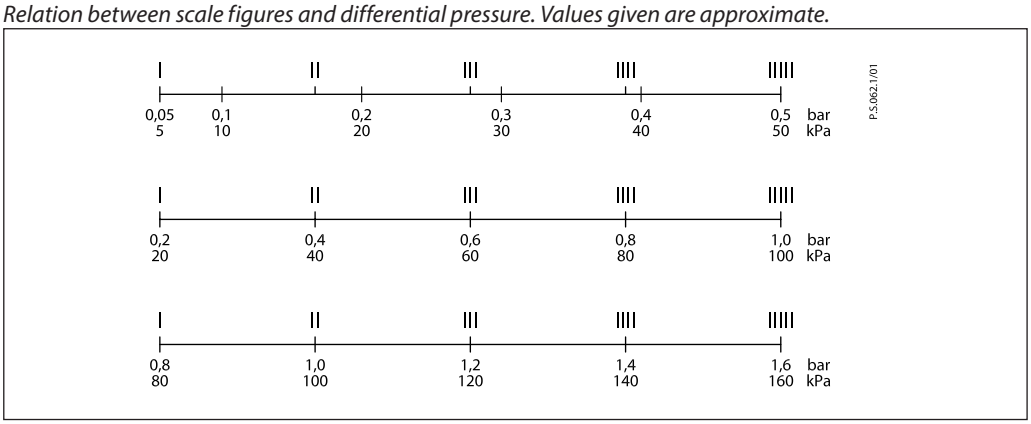



© Danfoss | 2019.02

## Dimensions

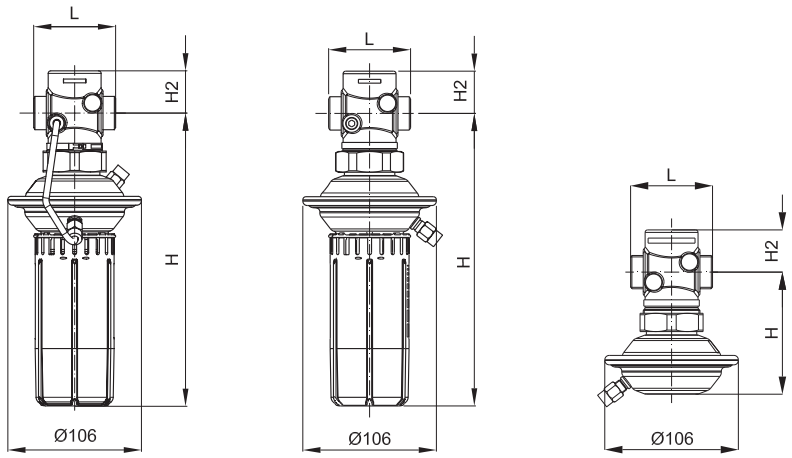


**AVP** (flow, return)

| DN | L | H | H2 | Weight (kg) |
|---|---|---|---|---|
| | mm | | | |
| 15 | 65 | 232 | 34 | 1.7 |
| 20 | 70 | 232 | 34 | 1.8 |
| 25 | 75 | 232 | 38 | 1.9 |
| 32 | 100 | 232 | 38 | 2.2 |

**AVP-F** (return)

| DN | L | H | H2 | Weight (kg) |
|---|---|---|---|---|
| | mm | | | |
| 15 | 65 | 97 | 34 | 1.3 |
| 20 | 70 | 97 | 34 | 1.4 |
| 25 | 75 | 97 | 38 | 1.5 |
| 32 | 100 | 97 | 38 | 1.8 |

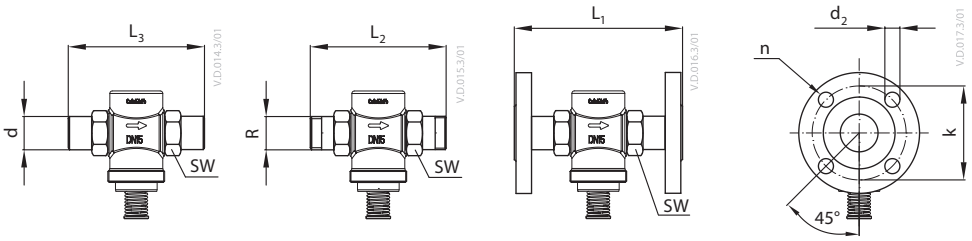


| DN | R [1] | SW | d | $L_1$ [2] | $L_2$ | $L_3$ | k | $d_2$ | n |
|---|---|---|---|---|---|---|---|---|---|
| | | mm | | | | | | | |
| 15 | ½ | 32 (G ¾A) | 21 | 130 | 120 | 139 | 65 | 14 | 4 |
| 20 | ¾ | 41 (G 1A) | 26 | 150 | 131 | 154 | 75 | 14 | 4 |
| 25 | 1 | 50 (G 1¼A) | 33 | 160 | 145 | 159 | 85 | 14 | 4 |
| 32 | 1¼ | 63 (G 1 ¾A) | 42 | - | 177 | 184 | - | - | - |

[1] *Conical ext. thread acc. to EN 10226-1*
[2] *Flanges PN 25, acc. to EN 1092-2*

Compression fittings

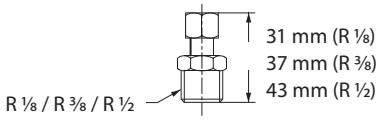

ENGINEERING
TOMORROW

**Data sheet**

# Differential pressure controller (PN 25)

## **AVP** - return and flow mounting, adjustable setting

### Description

AVP(-F) is a self-acting differential pressure controller primarily for use in district heating systems. The controller closes on rising differential pressure.

The controller has a control valve, an actuator with one control diaphragm and handle for differential pressure setting (fixed setting version (available on special request) is without handle).

**Main data:**

- DN 15-50
- $k_{VS}$ 0.4-25 $m^3/h$
- PN 25
- Setting range (AVP): 0.2-1.0 bar / 0.3-2.0 bar
- Fixed setting (AVP-F) [1]: 0.2 bar / 0.5 bar
- Temperature:
  - Circulation water / glycolic water up to 30%: 2 … 150 °C
- Connections:
  - Ext. thread (weld-on, thread and flange tailpieces)
  - Flange

[1] *On special request*

### Ordering

*Example 1:*
*Differential pressure controller; return mounting; DN 15; $k_{VS}$ 1.6; PN 25; setting range 0.2-1.0 bar; $T_{max}$ 150 °C; ext. thread*

- *1× AVP DN 15 controller*
  *Code No:* ***003H6283***
- *1× Impulse tube set AV, R ⅛*
  *Code No:* ***003H6852***

*Option:*
- *1× Weld-on tailpieces*
  *Code No:* ***003H6908***

*The controller will be delivered completely assembled, inclusive impulse tube between valve and actuator. External impulse tube (AV) must be ordered separately.*

**AVP Controller** (return mounting)

| Picture | DN (mm) | $k_{VS}$ ($m^3/h$) | Connection | | Δp setting range (bar) | Code No. | Δp setting range (bar) | Code No. |
|---|---|---|---|---|---|---|---|---|
| | 15 | 0.4 | Cylindr. ext. thread acc. to ISO 228/1 | G ¾ A | 0.2-1.0 | **003H6281** | 0.3-2.0 | **003H6291** |
| | | 1.0 | | | | **003H6282** | | **003H6292** |
| | | 1.6 | | | | **003H6283** | | **003H6293** |
| | | 2.5 | | | | **003H6284** | | **003H6294** |
| | | 4.0 | | | | **003H6285** | | **003H6295** |
| | 20 | 6.3 | | G 1 A | | **003H6286** | | **003H6296** |
| | 25 | 8.0 | | G 1¼ A | | **003H6287** | | **003H6297** |
| | 32 | 12.5 | | G 1¾ A | | **003H6288** | | - |
| | 40 | 16 | | G 2 A | | **003H6289** | | - |
| | 50 | 20 | | G 2½ A | | **003H6290** | | - |
| | 15 | 4.0 | Flanges PN 25, acc. to EN 1092-2 | | | **003H6345** | | **003H6351** |
| | 20 | 6.3 | | | | **003H6346** | | **003H6352** |
| | 25 | 8.0 | | | | **003H6347** | | **003H6353** |
| | 32 | 12.5 | | | | **003H6348** | | **003H6354** |
| | 40 | 20 | | | | **003H6349** | | **003H6355** |
| | 50 | 25 | | | | **003H6350** | | **003H6356** |

**Note:** *other controllers available on special request.*

## Ordering *(continuous)*

*Example 2 - **AVP** controller without predefined impulse tube:*

*Differential pressure controller; flow mounting; DN 15; $k_{VS}$ 4.0; PN 25; setting range 0.2-1.0 bar; $T_{max}$ 150°C; flange*

- *1× AVP DN 15 controller Code No: **003H6369***
- *2× Impulse tube set AV, R ⅛ Code No: **003H6852***

*Option:*
- *1× Weld-on tailpieces Code No: **003H6908***

*The controller will be delivered completely assembled, without impulse tube between valve and actuator. External impulse tubes (AV) must be ordered separately.*

## AVP Controller (flow mounting)

| Picture | DN (mm) | $k_{VS}$ ($m^3/h$) | Connection | | Δp setting range (bar) | Code No. | Δp setting range (bar) | Code No. |
|---|---|---|---|---|---|---|---|---|
| | 15 | 0.4 | Cylindr. ext. thread acc. to ISO 228/1 | G ¾ A | 0.2-1.0 | **003H6313** | 0.3-2.0 | **003H6323** |
| | | 1.0 | | | | **003H6314** | | **003H6324** |
| | | 1.6 | | | | **003H6315** | | **003H6325** |
| | | 2.5 | | | | **003H6316** | | **003H6326** |
| | | 4.0 | | | | **003H6317** | | **003H6327** |
| | 20 | 6.3 | | G 1 A | | **003H6318** | | **003H6328** |
| | 25 | 8.0 | | G 1¼ A | | **003H6319** | | **003H6329** |
| 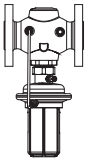 | 15 | 4.0 | Flanges PN 25, acc. to EN 1092-2 | | | **003H6369** [1] | | **003H6375** [1] |
| | 20 | 6.3 | | | | **003H6370** [1] | | **003H6376** [1] |
| | 25 | 8.0 | | | | **003H6371** [1] | | **003H6377** [1] |
| | 32 | 12.5 | | | | **003H6372** | | **003H6378** |
| | 40 | 20 | | | | **003H6373** | | **003H6379** |
| | 50 | 25 | | | | **003H6374** | | **003H6380** |

*Note: other controllers available on special request.*
*[1] Controller is without predefined impulse tube (see ordering example 2)*

## Accessories

| Picture | Type designation | DN | Connection | | Code No. |
|---|---|---|---|---|---|
| | Weld-on tailpieces | 15 | - | | **003H6908** |
| | | 20 | | | **003H6909** |
| | | 25 | | | **003H6910** |
| | | 32 | | | **003H6911** |
| | | 40 | | | **003H6912** |
| | | 50 | | | **003H6913** |
| | External thread tailpieces | 15 | Conical ext. thread acc. to EN 10226-1 | R ½ | **003H6902** |
| | | 20 | | R ¾ | **003H6903** |
| | | 25 | | R 1 | **003H6904** |
| | | 32 | | R 1¼ | **003H6905** |
| | | 40 | | R 1½ | **065B2004** |
| | | 50 | | R 2 | **065B2005** |
| 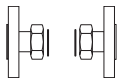 | Flange tailpieces | 15 | Flanges PN 25, acc. to EN 1092-2 | | **003H6915** |
| | | 20 | | | **003H6916** |
| | | 25 | | | **003H6917** |
| 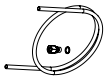 | Impulse tube set AV | Description:<br>- 1× copper tube Ø6 × 1 × 1500 mm<br>- 1× compression fitting [1] for imp. tube connection to pipe Ø6 × 1 mm | | R ⅛ | **003H6852** |
| | | | | R ⅜ | **003H6853** |
| | | | | R ½ | **003H6854** |
| | [1] 10 compression fittings for imp. tube connection to pipe, Ø6 × 1 mm R ⅛ | | | | **003H6857** |
| | [1] 10 compression fittings for imp. tube connection to pipe, Ø6 × 1 mm R ⅜ | | | | **003H6858** |
| | [1] 10 compression fittings for imp. tube connection to pipe, Ø6 × 1 mm R ½ | | | | **003H6859** |
| | [1] 10 compression fittings for imp. tube connection to actuator, Ø6 × 1 mm G ⅛ | | | | **003H6931** |
| | Shut off valve Ø6 mm | | | | **003H0276** |

*[1] Compression fitting consists of a nipple, compression ring and nut.*

## Service kits

| Picture | Type designation | DN (mm) | $k_{VS}$ ($m^3/h$) | Code No. AVP return | Code No. AVP flow |
|---|---|---|---|---|---|
| | Valve insert | 15 | 1.6 | **003H6863** | **003H6871** |
| | | | 2.5 | **003H6864** | **003H6872** |
| | | | 4.0 | **003H6865** | **003H6873** |
| | | 20 | 6.3 | **003H6866** | **003H6874** |
| | | 25 | 8 | **003H6867** | **003H6875** |
| | | 32 / 40 / 50 | 12.5 / 20 / 25 | **003H6868** | **003H6876** |

| Picture | Type designation | Δp setting range (bar) | AVP return | AVP flow |
|---|---|---|---|---|
| | Actuator with adjustable handle (AVP) | 0.2-1.0 | **003H6829** | **003H6834** |
| | | 0.3-2.0 | **003H6830** | **003H6835** |


© Danfoss | 2021.05

## Technical data

### Valve

| **Nominal diameter** | | **DN** | **15** | | | | | **20** | **25** | **32** | **40** | **50** |
|---|---|---|---|---|---|---|---|---|---|---|---|---|
| $k_{VS}$ value | | $m^3/h$ | 0.4 | 1.0 | 1.6 | 2.5 | 4.0 | 6.3 | 8.0 | 12.5 | 20 | 25 |
| Cavitation factor z | | | ≥ 0.6 | | | | | | ≥ 0.55 | | ≥ 0.5 | |
| Leakage acc. to standard IEC 534 | | % of $k_{VS}$ | ≤ 0.02 | | | | | | | ≤ 0.05 | | |
| Nominal pressure | | PN | 25 | | | | | | | | | |
| Max. differential pressure | | bar | 20 | | | | | | | 16 | | |
| Medium | | | Circulation water / glycolic water up to 30% | | | | | | | | | |
| Medium pH | | | Min. 7, max. 10 | | | | | | | | | |
| Medium temperature | | °C | 2 … 150 | | | | | | | | | |
| Connections | valve | | Extternal thread | | | | | | | | | |
| | | | - | | | | Flange | | | | | |
| | tailpieces | | Weld-on and external thread | | | | | | | | | |
| | | | Flange | | | | | | | - | | |
| **Materials** | | | | | | | | | | | | |
| Valve body | thread | | Red bronze CuSn5ZnPb (Rg5) | | | | | | | Ductile iron EN-GJS-400-18-LT (GGG 40.3) | | |
| | flange | | - | | | | Ductile iron EN-GJS-400-18-LT (GGG 40.3) | | | | | |
| Valve seat | | | Stainless steel, mat. No. 1.4571 | | | | | | | | | |
| Valve cone | | | Dezincing free brass CuZn36Pb2As | | | | | | | | | |
| Sealing | | | EPDM | | | | | | | | | |
| Pressure relieve system | | | Piston | | | | | | | | | |

### **AVP** Actuator

| **Type** | | | **AVP, AVP-F** [1] | |
|---|---|---|---|---|
| Actuator size | | $cm^2$ | 54 | |
| Nominal pressure | | PN | 25 | |
| Diff. pressure setting ranges and spring colours | | bar | 0.2-1.0 | 0.3-2.0 |
| | | | yellow | red |
| **Materials** | | | | |
| Actuator housing | Upper casing of diaphragm | | Stainless steel, mat. No.1.4301 | |
| | Lower casing of diaphragm | | Dezincing free brass CuZn36Pb2As | |
| Diaphragm | | | EPDM | |
| Impulse tube | | | Copper tube Ø6 × 1 mm | |

[1] *On special request.*

**Application principles**
- Return mounting

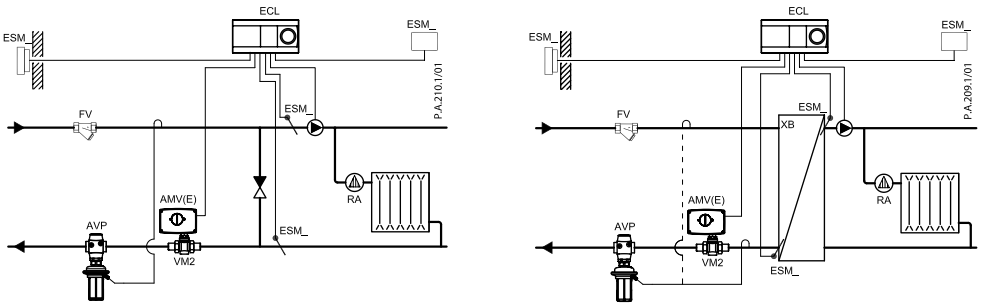


*Direct-connected heating system* *Indirectly connected heating system*

- Flow mounting

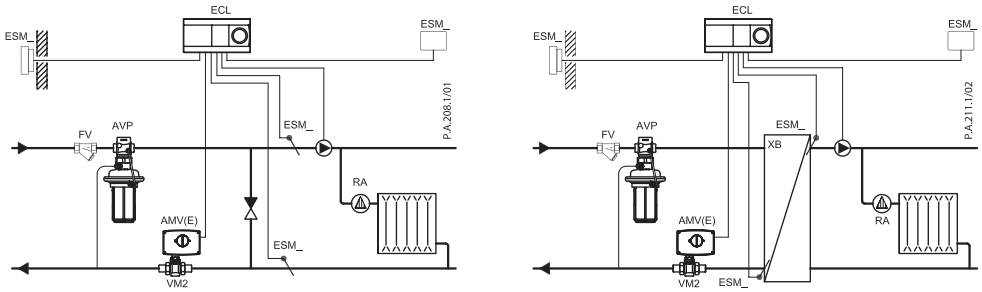


*Direct-connected heating system* *Indirectly connected heating system*

**Installation positions**

Up to medium temperature of 100 °C the controllers can be installed in any position.

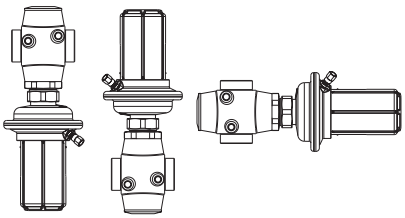

For higher temperatures the controllers have to be installed in horizontal pipes only, with a pressure actuator oriented downwards.

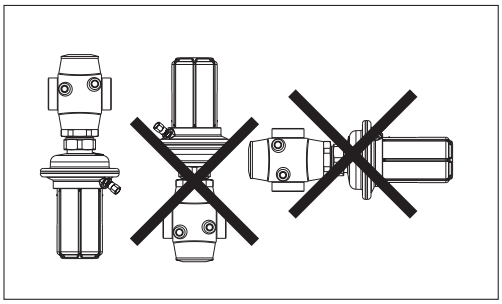

 © Danfoss | 2021.05

**Pressure temperature diagram**

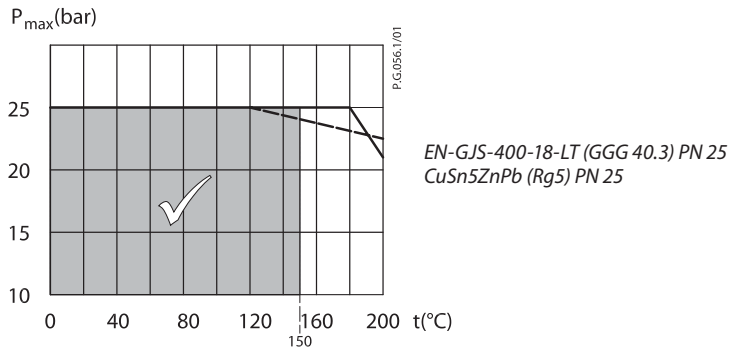


*Maximum allowed operating pressure as a function of medium temperature (according to EN 1092-2 and EN 1092-3).*

**Sizing**

- Directly connected heating system

**Example 1**
Motorised control valve (MCV) for mixing circuit in direct-connected heating system requires differential pressure of 0.3 bar (30 kPa).

Given data:
$Q_{max}$ = 1.2 m³/h (1200 l/h)
$\Delta p_{min}$ = 0.7 bar (70 kPa)
*$\Delta p_{circuit}$ = 0.1 bar (10 kPa)
$\Delta p_{MCV}$ = 0.3 bar (30 kPa) selected

*Remark
$\Delta p_{circuit}$ corresponds to the required pump pressure in the heating circuit and is not to be considered when sizing the AVP.

The differential pressure set value is:
$\Delta p_{set\ value} = \Delta p_{MCV}$
$\Delta p_{set\ value}$ = 0.3 bar (30 kPa)

The total pressure loss across the controller is:
$\Delta p_{AVP} = \Delta p_{min} - \Delta p_{MCV} = 0.7 - 0.3$
$\Delta p_{AVP}$ = 0.4 bar (40 kPa)

Possible pipe pressure losses in tubes, shut-off fittings, heatmeters, etc. are not included.

$k_v$ value is calculated according to formula:

$$k_v = \frac{Q_{max}}{\sqrt{\Delta p_{AVP}}} = \frac{1,2}{\sqrt{0,4}}$$

$k_v$ = 1.9 m³/h

Solution:
The example selects AVP DN 15, $k_{VS}$ value 2.5, with differential pressure setting range 0.2-1.0 bar.

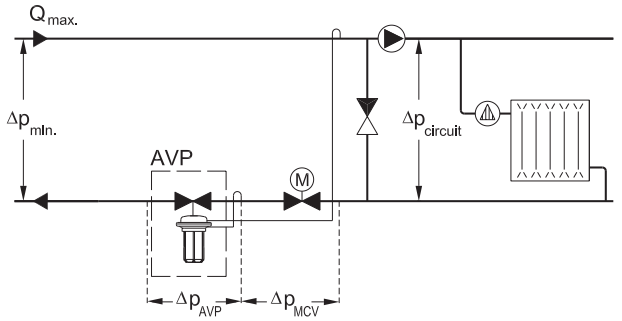


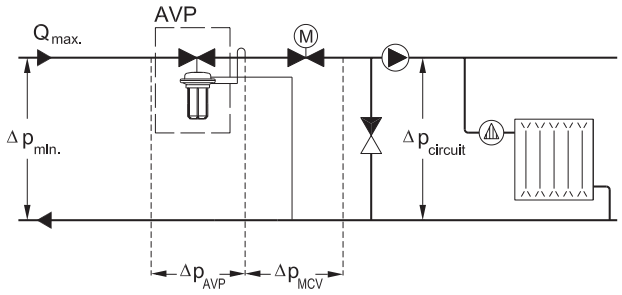

**Sizing** *(continuous)*

- Indirectly connected heating system

**Example 2**
Motorised control valve (MCV) for indirectly connected heating system requires differential pressure of 0.4 (40 kPa) bar.

Given data:
$Q_{max}$ = 1.25 m³/h (1250 l/h)
$\Delta p_{min}$ = 1.0 bar (100 kPa)
$\Delta p_{exchanger}$ = 0.05 bar (5 kPa)
$\Delta p_{MCV}$ = 0.4 bar (40 kPa) selected

The differential pressure set value is:
$\Delta p_{set\ value} = \Delta p_{exchanger} + \Delta p_{MCV} = 0.05 + 0.4$
$\Delta p_{set\ value} = 0.45$ bar (45 kPa)

The total pressure loss across the controller is:
$\Delta p_{AVP} = \Delta p_{min} - \Delta p_{exchanger} - \Delta p_{MCV} = 1.0 - 0.05 - 0.4$
$\Delta p_{AVP} = 0.55$ bar (55 kPa)

Possible pipe pressure losses in tubes, shut-off fittings, heatmeters, etc. are not included.

$k_v$ value is calculated according to formula:

$$k_v = \frac{Q_{max}}{\sqrt{\Delta p_{AVP}}} = \frac{1,25}{\sqrt{0,55}}$$

$k_v$ = 1.7 m³/h

Solution:
The example selects AVP DN 15, $k_{VS}$ value 2.5, with differential pressure setting range 0.2-1.0 bar.

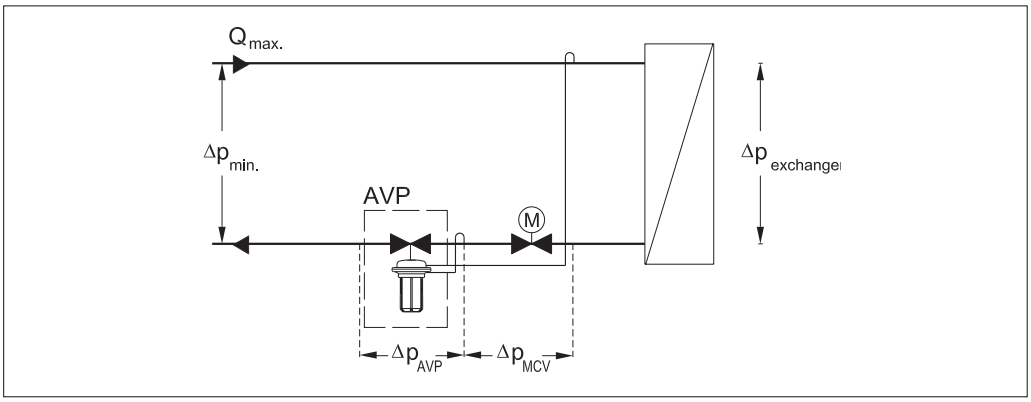


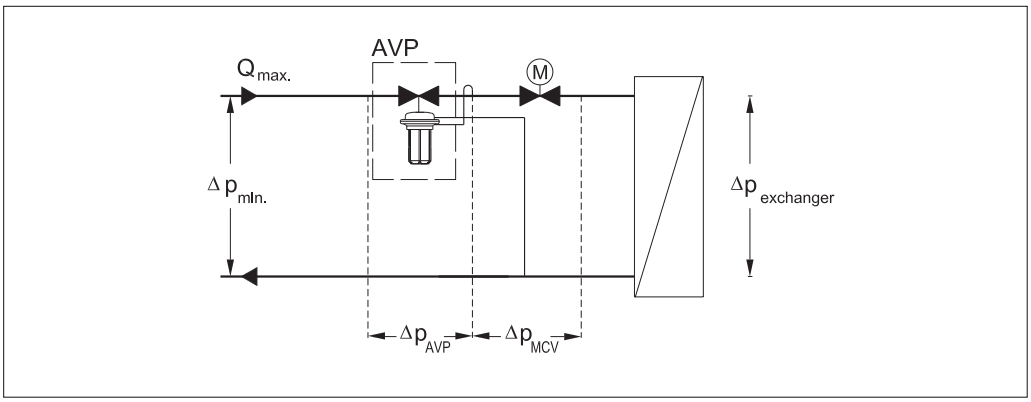



© Danfoss | 2021.05

## Design

1. Valve body
2. Valve insert
3. Pressure relieved valve cone
4. Valve stem
5. Control drain
6. Control diaphragm for diff. pressure control
7. Setting spring for diff. pressure control
8. Handle for diff. pressure setting, prepared for sealing
9. Union nut
10. Upper casing of diaphragm
11. Lower casing of diaphragm
12. Compression fitting for impulse tube
13. Excess pressure safety valve
14. Actuator

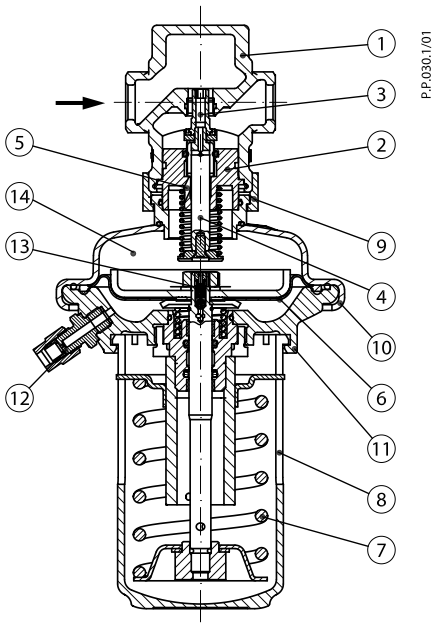


## Function

Pressure changes from flow and return pipes are being transferred through the impulse tubes and/or control drain in the actuator stem to the actuator chambers and act on control diaphragm for diff. pressure control. The diff. pressure is controlled by means of setting spring for diff. pressure control. Control valve closes on rising differential pressure and opens on falling differential pressure to maintain constant differential pressure.

Controller is equipped with excess pressure safety valve, which protects control diaphragm for diff. pressure control from too high differential pressure (not implemented at AVP-F flow mounting version).

## Settings

*Differential pressure setting*
Differential pressure setting (valid for AVP controller only) is being done by the adjustment of the setting spring for diff. pressure control. The adjustment can be done by means of handle for diff. pressure setting and/or pressure indicators.

## Adjustment diagram

*Relation between scale figures and differential pressure. Values given are approximate.*

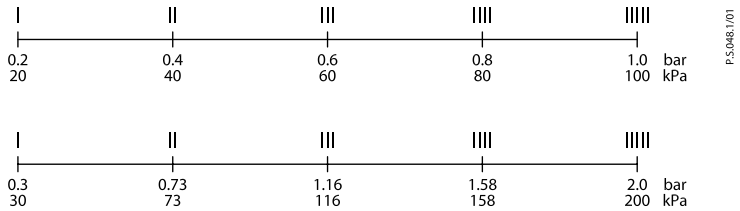

## Dimensions

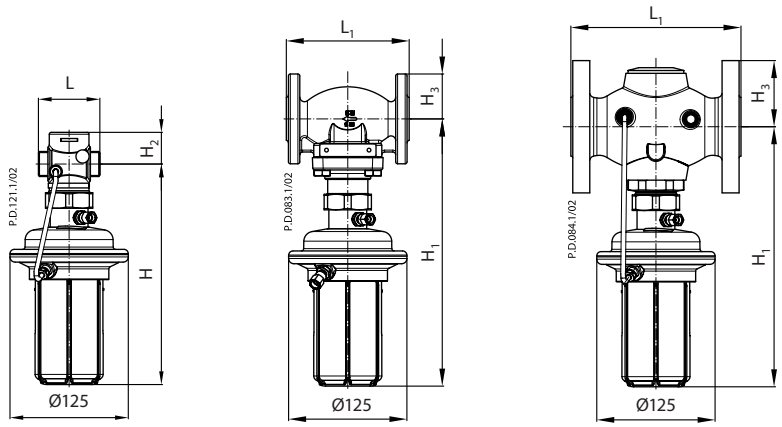


*DN 15-50* *DN 15-25* *DN 32-50*

| DN | | 15 | | 20 | | 25 | | 32 | | 40 | | 50 | |
|---|---|---|---|---|---|---|---|---|---|---|---|---|---|
| | | flow | return | flow | return | flow | return | flow | return | flow | return | flow | return |
| L | mm | 65 | | 70 | | 75 | | - | 100 | - | 110 | - | 130 |
| $L_1$ | mm | 130 | | 150 | | 160 | | 180 | | 200 | | 230 | |
| H | mm | 233 | 220 | 233 | 220 | 233 | 220 | - | 275 | - | 275 | - | 275 |
| $H_1$ | mm | 285 | 269 | 285 | 269 | 285 | 269 | 275 | 261 | 275 | 261 | 275 | 261 |
| $H_2$ | mm | 34 | | 34 | | 37 | | - | 62 | - | 62 | - | 62 |
| $H_3$ | mm | 47 | | 52 | | 57 | | 70 | | 75 | | 82 | |
| Weight (thread) | kg | 3.5 | | 3.5 | | 3.7 | | - | 5.8 | - | 5.9 | - | 6.6 |
| Weight (flange) | kg | 6.1 | | 6.8 | | 7.4 | | 10.2 | | 11.7 | | 13.9 | |

***Note:*** *Other flange dimensions - see table for tailpieces.*

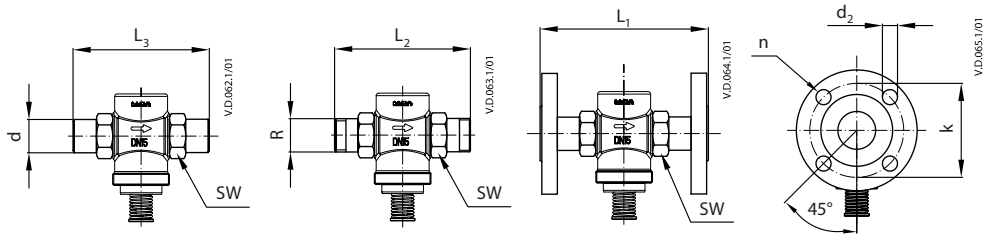


| DN | R [1] | SW | d | $L_1$ [2] | $L_2$ | $L_3$ | k | $d_2$ | n |
|---|---|---|---|---|---|---|---|---|---|
| | | mm | | | | | | | |
| 15 | ½ | 32 (G ¾A) | 21 | 130 | 120 | 139 | 65 | 14 | 4 |
| 20 | ¾ | 41 (G 1A) | 26 | 150 | 131 | 154 | 75 | 14 | 4 |
| 25 | 1 | 50 (G 1¼A) | 33 | 160 | 145 | 159 | 85 | 14 | 4 |
| 32 | 1¼ | 63 (G 1¾A) | 42 | - | 177 | 184 | 100 | 18 | 4 |
| 40 | 1 ½ | 70 (G 2A) | 47 | - | 200 | 204 | 110 | 18 | 4 |
| 50 | 2 | 82 (G 2½A) | 60 | - | 244 | 234 | 125 | 18 | 4 |

[1] *Conical ext. thread acc. to EN 10226-1*
[2] *Flanges PN 25, acc. to EN 1092-2*

*Compression fittings*

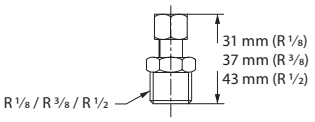


**Danfoss A/S**
Climate Solutions • climatesolutions.danfoss.com • +45 7488 2222 • E-Mail: climatesolutions@danfoss.com

Any information, including, but not limited to information on selection of product, its application or use, product design, weight, dimensions, capacity or any other technical data in product manuals, catalogues descriptions, advertisements, etc. and whether made available in writing, orally, electronically, online or via download, shall be considered informative, and is only binding if and to the extent, explicit reference is made in a quotation or order confirmation. Danfoss cannot accept any responsibility for possible errors in catalogues, brochures, videos and other material.
Danfoss reserves the right to alter its products without notice. This also applies to products ordered but not delivered provided that such alterations can be made without changes to form, fit or function of the product.
All trademarks in this material are property of Danfoss A/S or Danfoss group companies. Danfoss and the Danfoss logo are trademarks of Danfoss A/S. All rights reserved.

## Data sheet

# Differential pressure controller (PN 25)

## AVP - return and flow mounting, adjustable setting

## AVP-F - return and flow mounting, fixed setting

### Description

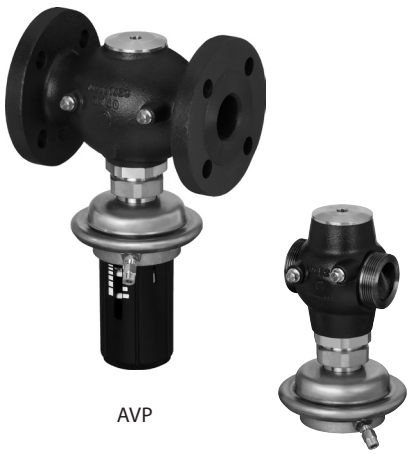


AVP(-F) is a self-acting differential pressure controller primarily for use in district heating systems. The controller closes on rising differential pressure.

The controller has a control valve, an actuator with one control diaphragm and handle for differential pressure setting (fixed setting version is without handle).

**Main data:**

- DN 15-50
- $k_{vs}$ 0.4 - 25 $m^3/h$
- PN 25
- Setting range (AVP): 0.2 - 1.0 bar / 0.3 - 2.0 bar
- Fixed setting (AVP-F): 0.2 bar / 0.5 bar
- Temperature:
  - Circulation water / glycolic water up to 30%: 2 … 150 °C
- Connections:
  - Ext. thread (weld-on, thread and flange tailpieces)
  - Flange

### Ordering

*Example 1 - **AVP** controller with predefined impulse tube:*

*Differential pressure controller; return mounting; DN 15; $k_{vs}$ 1.6; PN 25; setting range 0.2 - 1.0 bar; $t_{max}$ 150 °C; ext. thread*

- *1x AVP DN 15 controller*
  *Code No: **003H6283***

*Option:*

- *1x Impulse tube set AV, R ⅛*
  *Code No: **003H6852***
- *1x Weld-on tailpieces*
  *Code No: **003H6908***

*The controller will be delivered completely assembled, inclusive impulse tube between valve and actuator. External impulse tube (AV) must be ordered separately.*

**AVP** Controller (return mounting)

| Picture | DN (mm) | $k_{vs}$ (m3/h) | Connection | | Δp setting range (bar) | Code No. | Δp setting range (bar) | Code No. |
|---|---|---|---|---|---|---|---|---|
| | 15 | 0.4 | Cylindr. ext. thread acc. to ISO 228/1 | G ¾ A | 0.2 - 1.0 | **003H6281** | 0.3 - 2.0 | **003H6291** |
| | | 1.0 | | | | **003H6282** | | **003H6292** |
| | | 1.6 | | | | **003H6283** | | **003H6293** |
| | | 2.5 | | | | **003H6284** | | **003H6294** |
| | | 4.0 | | | | **003H6285** | | **003H6295** |
| | 20 | 6.3 | | G 1 A | | **003H6286** | | **003H6296** |
| | 25 | 8.0 | | G 1¼ A | | **003H6287** | | **003H6297** |
| | 15 | 4.0 | Flanges PN 25, acc. to EN 1092-2 | | | **003H6345** | | **003H6351** |
| | 20 | 6.3 | | | | **003H6346** | | **003H6352** |
| | 25 | 8.0 | | | | **003H6347** | | **003H6353** |
| | 32 | 12.5 | | | | **003H6348** | | **003H6354** |
| | 40 | 20 | | | | **003H6349** | | **003H6355** |
| | 50 | 25 | | | | **003H6350** | | **003H6356** |

***Note:** other controllers available on request.*

## Ordering *(continuous)*

*Example 2 - **AVP** controller without predefined impulse tube:*

*Differential pressure controller; flow mounting; DN 15; $k_{vs}$ 4.0; PN 25; setting range 0.2 - 1.0 bar; $t_{max}$ 150°C; flange*

- *1x AVP DN 15 controller*
  *Code No: **003H6369***

*Option:*
- *2x Impulse tube set AV, R ⅛*
  *Code No: **003H6852***
- *1x Weld-on tailpieces*
  *Code No: **003H6908***

*The controller will be delivered completely assembled, without impulse tube between valve and actuator. External impulse tubes (AV) must be ordered separately.*

### **AVP** Controller (flow mounting)

| Picture | DN (mm) | $k_{vs}$ (m3/h) | Connection | | Δp setting range (bar) | Code No. | Δp setting range (bar) | Code No. |
|---|---|---|---|---|---|---|---|---|
| | 15 | 0.4 | Cylindr. ext. thread acc. to ISO 228/1 | G ¾ A | 0.2 - 1.0 | **003H6313** | 0.3 - 2.0 | **003H6323** |
| | | 1.0 | | | | **003H6314** | | **003H6324** |
| | | 1.6 | | | | **003H6315** | | **003H6325** |
| | | 2.5 | | | | **003H6316** | | **003H6326** |
| | | 4.0 | | | | **003H6317** | | **003H6327** |
| | 20 | 6.3 | | G 1 A | | **003H6318** | | **003H6328** |
| | 25 | 8.0 | | G 1¼ A | | **003H6319** | | **003H6329** |
| 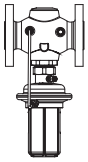 | 15 | 4.0 | Flanges PN 25, acc. to EN 1092-2 | | | **003H6369** [1] | | **003H6375** [1] |
| | 20 | 6.3 | | | | **003H6370** [1] | | **003H6376** [1] |
| | 25 | 8.0 | | | | **003H6371** [1] | | **003H6377** [1] |
| | 32 | 12.5 | | | | **003H6372** | | **003H6378** |
| | 40 | 20 | | | | **003H6373** | | **003H6379** |
| | 50 | 25 | | | | **003H6374** | | **003H6380** |

***Note:** other controllers available on request.*
*[1] Controller is without predefined impulse tube (see ordering example 2)*

### **AVP-F** Controller (return mounting)

| Picture | DN (mm) | $k_{vs}$ ($m^3$/h) | Connection | | Δp setting range (bar) | Code No. | Δp setting range (bar) | Code No. |
|---|---|---|---|---|---|---|---|---|
| | 15 | 4.0 | Cylindr. ext. thread acc. to ISO 228/1 | G ¾ A | 0.2 | **003H6301** | 0.5 | **003H6307** |
| | 20 | 6.3 | | G 1 A | | **003H6302** | | **003H6308** |
| | 25 | 8.0 | | G 1¼ A | | **003H6303** | | **003H6309** |
| | | | | | | | | |
| 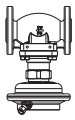 | 15 | 4.0 | Flanges PN 25, acc. to EN 1092-2 | | | **003H6357** | | **003H6363** |
| | 20 | 6.3 | | | | **003H6358** | | **003H6364** |
| | 25 | 8.0 | | | | **003H6359** | | **003H6365** |
| | 32 | 12.5 | | | | **003H6360** | | **003H6366** |
| | 40 | 20 | | | | **003H6361** | | **003H6367** |
| | 50 | 25 | | | | **003H6362** | | **003H6368** |

***Note:** other controllers available on request.*

### **AVP-F** Controller (flow mounting)

| Picture | DN (mm) | $k_{vs}$ ($m^3$/h) | Connection | | Δp setting range (bar) | Code No. | Δp setting range (bar) | Code No. |
|---|---|---|---|---|---|---|---|---|
| | 15 | 4.0 | Cylindr. ext. thread acc. to ISO 228/1 | G ¾ A | 0.2 | **003H6333** | 0.5 | **003H6339** |
| | 20 | 6.3 | | G 1 A | | **003H6334** | | **003H6340** |
| | 25 | 8.0 | | G 1¼ A | | **003H6335** | | **003H6341** |
| | | | | | | | | |
| 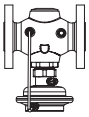 | 15 | 4.0 | Flanges PN 25, acc. to EN 1092-2 | | | **003H6381** [1] | | **003H6387** [1] |
| | 20 | 6.3 | | | | **003H6382** [1] | | **003H6388** [1] |
| | 25 | 8.0 | | | | **003H6383** [1] | | **003H6389** [1] |
| | 32 | 12.5 | | | | **003H6384** | | **003H6390** |
| | 40 | 20 | | | | **003H6385** | | **003H6391** |
| | 50 | 25 | | | | **003H6386** | | **003H6392** |

***Note:** other controllers available on request.*
*[1] Controller is without predefined impulse tube (see ordering example 2)*

## Ordering *(continuous)*

### Accessories

| Picture | Type designation | DN | Connection | | Code No. |
|---|---|---|---|---|---|
| | Weld-on tailpieces | 15 | - | | **003H6908** |
| | | 20 | | | **003H6909** |
| | | 25 | | | **003H6910** |
| | External thread tailpieces | 15 | Conical ext. thread acc. to EN 10226-1 | R ½ | **003H6902** |
| | | 20 | | R ¾ | **003H6903** |
| | | 25 | | R 1 | **003H6904** |
| 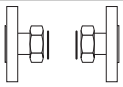 | Flange tailpieces | 15 | Flanges PN 25, acc. to EN 1092-2 | | **003H6915** |
| | | 20 | | | **003H6916** |
| | | 25 | | | **003H6917** |
| 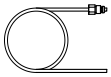 | Impulse tube set AV | Description:<br>- 1× copper tube Ø6 × 1 × 1500 mm<br>- 1× compression fitting *) for imp. tube connection to pipe Ø6 × 1 mm | | R ⅛ | **003H6852** |
| | | | | R ⅜ | **003H6853** |
| | | | | R ½ | **003H6854** |
| | * 10 compression fittings for imp. tube connection to pipe, Ø6 × 1 mm R ⅛ | | | | **003H6857** |
| | * 10 compression fittings for imp. tube connection to pipe, Ø6 × 1 mm R ⅜ | | | | **003H6858** |
| | * 10 compression fittings for imp. tube connection to pipe, Ø6 × 1 mm R ½ | | | | **003H6859** |
| | * 10 compression fittings for imp. tube connection to actuator, Ø6 × 1 mm G ⅛ | | | | **003H6931** |
| | Shut off valve Ø6 mm | | | | **003H0276** |

*) *Compression fitting consists of a nipple, compression ring and nut.*

### Service kits

| Picture | Type designation | DN (mm) | $k_{vs}$ ($m^3/h$) | Code No. AVP(-F) return | Code No. AVP(-F) flow |
|---|---|---|---|---|---|
| | Valve insert | 15 | 1.6 | **003H6863** | **003H6871** |
| | | | 2.5 | **003H6864** | **003H6872** |
| | | | 4.0 | **003H6865** | **003H6873** |
| | | 20 | 6.3 | **003H6866** | **003H6874** |
| | | 25 | 8 | **003H6867** | **003H6875** |
| | | 32 / 40 / 50 | 12.5 / 20 / 25 | **003H6868** | **003H6876** |

| Picture | Type designation | Δp setting range (bar) | AVP(-F) return | AVP(-F) flow |
|---|---|---|---|---|
| | Actuator with adjustable handle (AVP) | 0.2 - 1.0 | **003H6829** | **003H6834** |
| | | 0.3 - 2.0 | **003H6830** | **003H6835** |
| | Actuator without adjustable handle (AVP-F) | 0.2 | **003H6841** | **003H6839** |
| | | 0.5 | | **003H6840** |

## Technical data

### Valve

| Nominal diameter | DN | 15 | | | | | 20 | 25 | 32 | 40 | 50 |
|---|---|---|---|---|---|---|---|---|---|---|---|
| $k_{vs}$ value | $m^3/h$ | 0.4 | 1.0 | 1.6 | 2.5 | 4.0 | 6.3 | 8.0 | 12.5 | 20 | 25 |
| Cavitation factor z [1)] | | ≥ 0.6 | | | | | | | | | |
| Nominal pressure | PN | 25 | | | | | | | | | |
| Max. differential pressure | bar | 20 | | | | | | | 16 | | |
| Medium | | Circulation water / glycolic water up to 30% | | | | | | | | | |
| Medium pH | | Min. 7, max. 10 | | | | | | | | | |
| Medium temperature | °C | 2 … 150 | | | | | | | | | |
| Connections | valve | Ext. thread and flange | | | | | | | Flange | | |
| | tailpieces | Weld-on, external thread and flange | | | | | | | - | | |
| **Materials** | | | | | | | | | | | |
| Valve body | thread | Red bronze CuSn5ZnPb (Rg5) | | | | | | | - | | |
| | flange | Ductile iron EN-GJS-400-18-LT (GGG 40.3) | | | | | | | | | |
| Valve seat | | Stainless steel, mat. No. 1.4571 | | | | | | | | | |
| Valve cone | | Dezincing free brass CuZn36Pb2As | | | | | | | | | |
| Sealing | | EPDM | | | | | | | | | |

[1)] *$k_v/k_{vs} \leq 0.5$ at DN 25 and higher*

## Technical data *(continuous)*

### Actuator

| Type | | | AVP | | AVP-F | |
|---|---|---|---|---|---|---|
| Actuator size | | $cm^2$ | 54 | | | |
| Nominal pressure | | PN | 25 | | | |
| Diff. pressure setting ranges and spring colours | | bar | 0.2 - 1.0 | 0.3 - 2.0 | 0.2 | 0.5 |
| | | | yellow | red | (fixed setting) | |
| **Materials** | | | | | | |
| Actuator housing | Upper casing of diaphragm | | Stainless steel, mat. No.1.4301 | | | |
| | Lower casing of diaphragm | | Dezincing free brass CuZn36Pb2As | | | |
| Diaphragm | | | EPDM | | | |
| Impulse tube | | | Copper tube Ø6 × 1 mm | | | |

## Application principles

*- Return mounting*

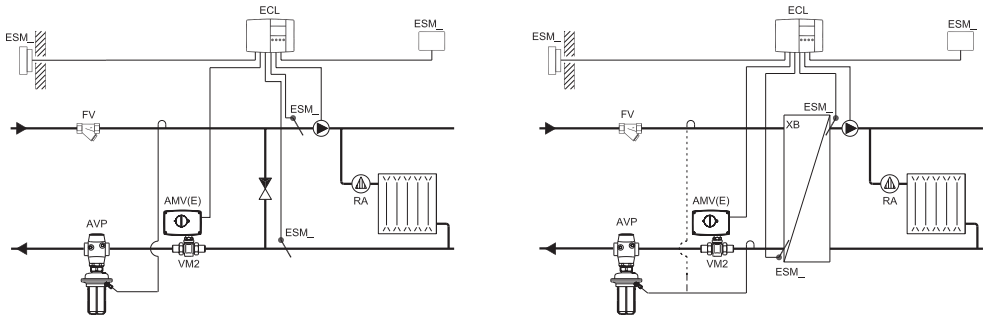


*Direct-connected heating system* *Indirectly connected heating system*

*- Flow mounting*

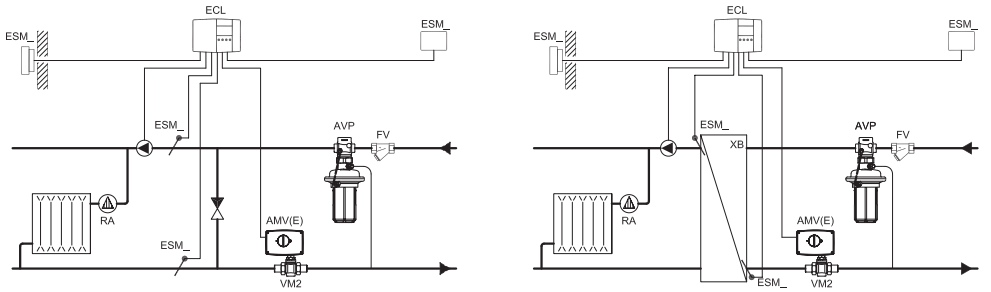


*Direct-connected heating system* *Indirectly connected heating system*

## Installation positions

Up to medium temperature of 100 °C the controllers can be installed in any position.

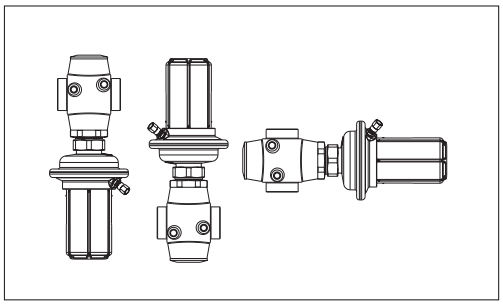

For higher temperatures the controllers have to be installed in horizontal pipes only, with a pressure actuator oriented downwards.

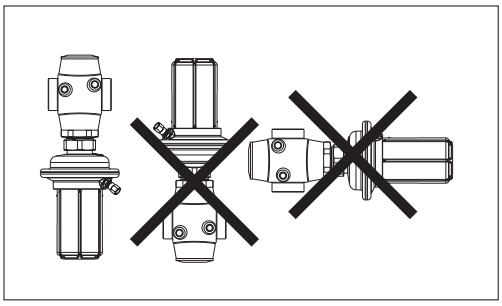

## Pressure temperature diagram

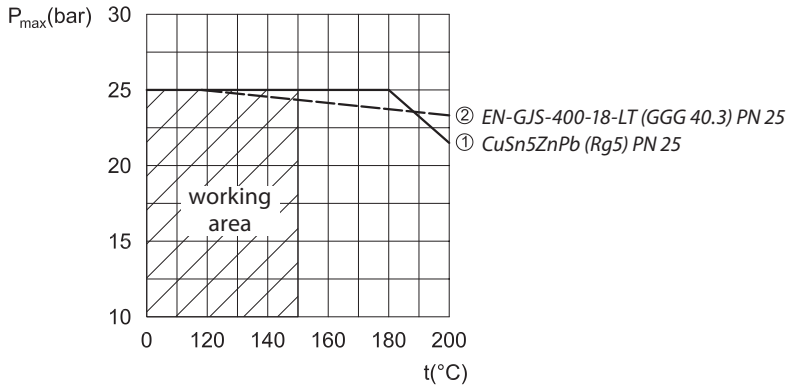


*Maximum allowed operating pressure as a function of medium temperature (according to EN 1092-2 and EN 1092-3).*

## Sizing

- *Directly connected heating system*

**Example 1**
Motorised control valve (MCV) for mixing circuit in direct-connected heating system requires differential pressure of 0.3 bar (30 kPa).

*Given data:*

$Q_{max}$ = 1.2 m³/h (1200 l/h)
$\Delta p_{min}$ = 0.7 bar (70 kPa)
*$\Delta p_{circuit}$ = 0.1 bar (10 kPa)
$\Delta p_{MCV}$ = 0.3 bar (30 kPa) selected

*Remark
$\Delta p_{circuit}$ corresponds to the required pump pressure in the heating circuit and is not to be considered when sizing the AVP.

The differential pressure set value is:
$\Delta p_{set\ value} = \Delta p_{MCV}$
$\Delta p_{set\ value}$ = 0.3 bar (30 kPa)

The total pressure loss across the controller is:
$\Delta p_{AVP} = \Delta p_{min} - \Delta p_{MCV} = 0.7 - 0.3$
$\Delta p_{AVP}$ = 0.4 bar (40 kPa)

Possible pipe pressure losses in tubes, shut-off fittings, heatmeters, etc. are not included.

$k_v$ value is calculated according to formula:

$$k_v = \frac{Q_{max}}{\sqrt{\Delta p_{AVP}}} = \frac{1.2}{\sqrt{0.4}}$$

$k_v$ = 1.9 m³/h

*Solution:*
The example selects AVP DN 15, $k_{vs}$ value 2.5, with differential pressure setting range 0.2 - 1.0 bar.

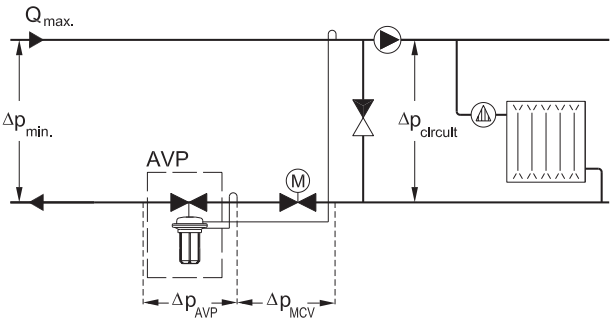


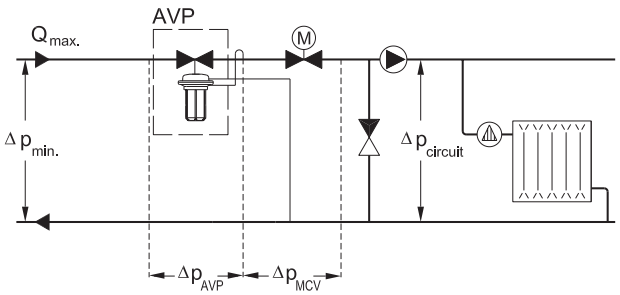

**Sizing** *(continuous)*

- *Indirectly connected heating system*

**Example 2**
Motorised control valve (MCV) for indirectly connected heating system requires differential pressure of 0.5 (50 kPa) bar.

*Given data:*
$Q_{max}$ = 1.25 m³/h (1250 l/h)
$\Delta p_{min}$ = 1.0 bar (100 kPa)
$\Delta p_{exchanger}$ = 0.05 bar (5 kPa)
$\Delta p_{MCV}$ = 0.4 bar (40 kPa) selected

The differential pressure set value is:
$\Delta p_{set\ value} = \Delta p_{exchanger} + \Delta p_{MCV} = 0.05 + 0.4$
$\Delta p_{set\ value} = 0.45$ bar (45 kPa)

The total pressure loss across the controller is:
$\Delta p_{AVP} = \Delta p_{min} - \Delta p_{exchanger} - \Delta p_{MCV} = 1.0 - 0.05 - 0.4$
$\Delta p_{AVP} = 0.55$ bar (55 kPa)

Possible pipe pressure losses in tubes, shut-off fittings, heatmeters, etc. are not included.

$k_v$ value is calculated according to formula:

$$k_v = \frac{Q_{max}}{\sqrt{\Delta p_{AVP}}} = \frac{1.25}{\sqrt{0.55}}$$

$k_v$ = 1.7 m³/h

*Solution:*
The example selects AVP DN 15, $k_{vs}$ value 2.5, with differential pressure setting range 0.2 - 1.0 bar.

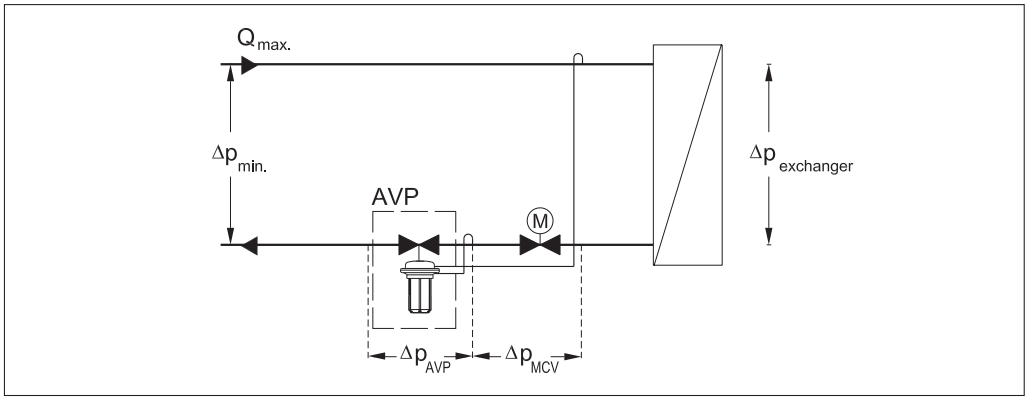


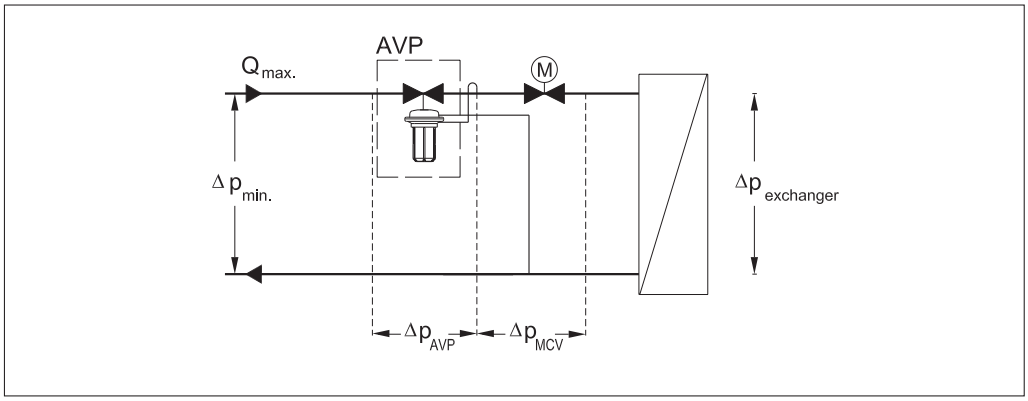

## Design

1. Valve body
2. Valve insert
3. Pressure relieved valve cone
4. Valve stem
5. Control drain
6. Control diaphragm
7. Setting spring for diff. pressure control
8. Handle for diff. pressure setting, prepared for sealing
9. Union nut
10. Upper casing of diaphragm
11. Lower casing of diaphragm
12. Compression fitting for impulse tube
13. Excess pressure safety valve

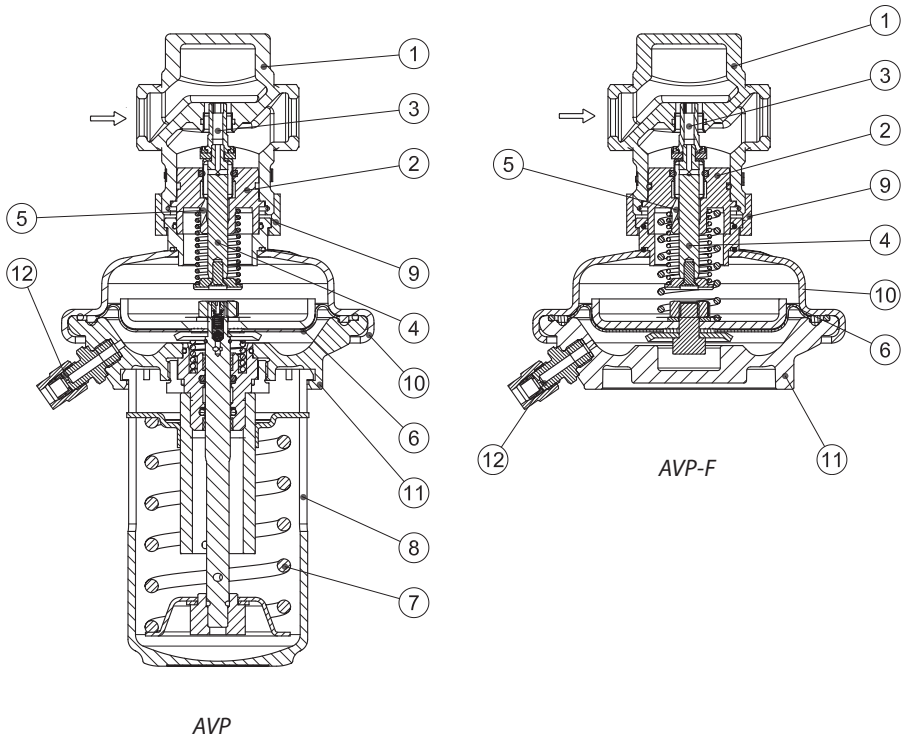


## Function

Pressure changes from the flow and return pipeline are being transferred through the impulse tubes and/or control drain in the actuator stem to the actuator chambers and act on control diaphragm. Control valve closes on rising differential pressure and opens on falling differential pressure to maintain constant differential pressure.

Controller with adjustable setting is equipped with excess pressure safety valve, which protects actuator from too high differential pressure.

## Settings

*Differential pressure setting*
Differential pressure setting is being done by the adjustment of the setting spring for diff. pressure control. The adjustment can be performed on the basis of diff. pressure adjustment diagram (see relevant instructions) and/or pressure indicators.

## Adjustment

*Relation between scale figures and differential pressure. Values given are approximate.*

| | | | | | |
|---|---|---|---|---|---|
| I | II | III | IIII | IIIII | |
| 0,2 | 0,4 | 0,6 | 0,8 | 1,0 | bar |
| 20 | 40 | 60 | 80 | 100 | kPa |
| I | II | III | IIII | IIIII | |
| 0,3 | 0,73 | 1,16 | 1,58 | 2,0 | bar |
| 30 | 73 | 116 | 158 | 200 | kPa |

## Dimensions

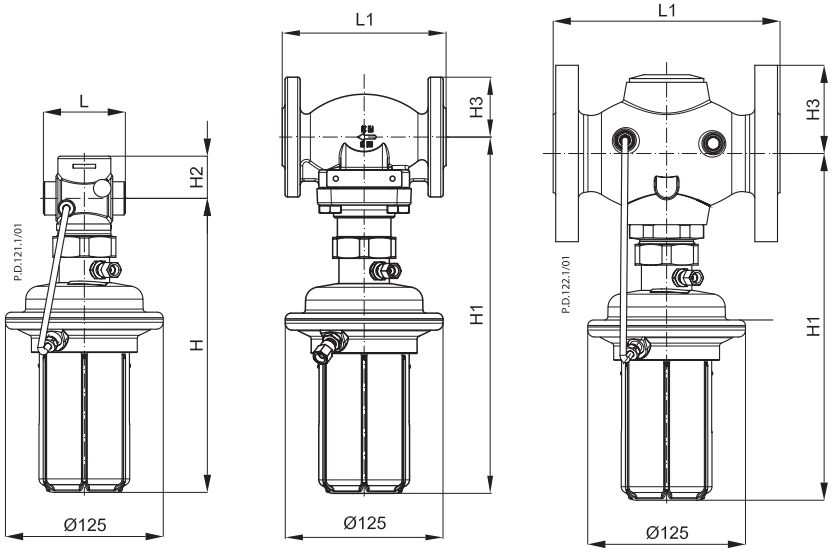


*DN 15-25* *DN 15-25* *DN 32-50*

### AVP

| DN | | 15 | | 20 | | 25 | | 32 | | 40 | | 50 | |
|---|---|---|---|---|---|---|---|---|---|---|---|---|---|
| | | flow | return | flow | return | flow | return | flow | return | flow | return | flow | return |
| L | mm | 65 | | 70 | | 75 | | - | | - | | - | |
| L1 | mm | 130 | | 150 | | 160 | | 180 | | 200 | | 230 | |
| H | mm | 233 | 220 | 233 | 220 | 233 | 220 | - | - | - | - | - | - |
| H1 | mm | 223 | 269 | 223 | 269 | 223 | 269 | 275 | 261 | 275 | 261 | 275 | 261 |
| H2 | mm | 34 | | 34 | | 37 | | - | | - | | - | |
| H3 | mm | 47 | | 52 | | 57 | | 70 | | 75 | | 82 | |
| Weight (thread) | kg | 3.5 | | 3.5 | | 3.7 | | - | | - | | - | |
| Weight (flange) | kg | 6.1 | | 6.8 | | 7.4 | | 10.2 | | 11.7 | | 13.9 | |

***Note:*** *Other flange dimensions - see table for tailpieces.*

## Dimensions *(continuous)*

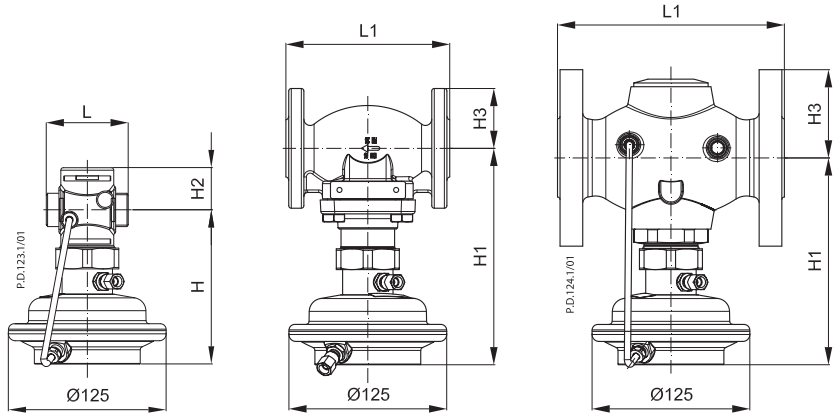


*DN 15-25* *DN 15-25* *DN 32-50*

### AVP-F

| DN | | 15 | | 20 | | 25 | | 32 | | 40 | | 50 | |
|---|---|---|---|---|---|---|---|---|---|---|---|---|---|
| | | flow | return | flow | return | flow | return | flow | return | flow | return | flow | return |
| L | mm | 65 | | 70 | | 75 | | - | | - | | - | |
| L1 | mm | 130 | | 150 | | 160 | | 180 | | 200 | | 230 | |
| H | mm | 122 | 108 | 122 | 108 | 122 | 108 | - | - | - | - | - | - |
| H1 | mm | 172 | 158 | 172 | 158 | 172 | 158 | 164 | 150 | 164 | 150 | 164 | 150 |
| H2 | mm | 34 | | 34 | | 37 | | - | | - | | - | |
| H3 | mm | 47 | | 52 | | 57 | | 70 | | 75 | | 82 | |
| Weight (thread) | kg | 2.5 | | 2.5 | | 2.7 | | - | | - | | - | |
| Weight (flange) | kg | 5.1 | | 5.8 | | 6.4 | | 9.2 | | 10.8 | | 12.9 | |

***Note:*** *Other flange dimensions - see table for tailpieces.*

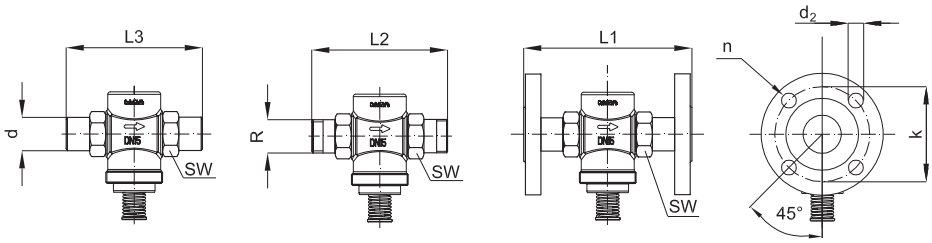


| DN | | 15 | 20 | 25 | 32 | 40 | 50 |
|---|---|---|---|---|---|---|---|
| SW | mm | 32 (G ¾A) | 41 (G 1A) | 50 (G 1¼A) | | | |
| d | mm | 21 | 26 | 33 | | | |
| R [1] | mm | ½ | ¾ | 1 | | | |
| L1 [2] | mm | 130 | 150 | 160 | | | |
| L2 | mm | 131 | 144 | 160 | | | |
| L3 | mm | 139 | 154 | 159 | | | |
| k | mm | 65 | 75 | 85 | 100 | 110 | 125 |
| $d_2$ | mm | 14 | 14 | 14 | 18 | 18 | 18 |
| n | | 4 | 4 | 4 | 4 | 4 | 4 |

[1] *Conical ext. thread acc. to EN 10226-1*
[2] *Flanges PN 25, acc. to EN 1092-2*

Compression fittings

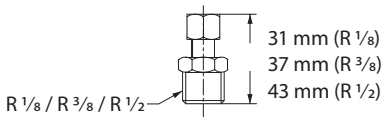

ENGINEERING
TOMORROW

**Data sheet**

# Differential pressure controller (PN 16, 25, 40)

## AFP(-9) / VFG 2(1) – return and flow mounting, adjustable setting

### Description

The controller is a self-acting differential pressure controller primarily for use in district heating systems. The controller closes on rising differential pressure.

The controller has a control valve, an actuator with one control diaphragm and spring for differential pressure setting.

Further on two valve versions are available:
- VFG 2 with metallic sealing cone
- VFG 21 with soft sealing cone

**Main data:**
- DN 15-250
- $k_{VS}$ 4.0-400 $m^3/h$
- PN 16, 25, 40
- Setting range:
  - AFP: 0.05-0.35 bar / 0.1-0.7 bar / 0.15-1.5 bar
  - AFP-9: 0.5-3 bar / 1-6 bar
- Temperature:
  - Circulation water / glycolic water up to 30 %: 2 … 150 / 200 °C
- Connections:
  - Flange

### Ordering

*Example 1:*
*Differential pressure controller; return mounting; DN 15; $k_{VS}$ 4.0; PN 16; metallic sealing; setting range 0.15-1.5 bar; $T_{max}$ 150 °C; flange;*

*– 1× VFG 2 DN 15 valve*
*Code no: **065B2388***
*– 1× AFP actuator*
*Code no: **003G1016***
*– 2× Impulse tube set AF*
*Code no: **003G1391***

*Products will be delivered separatly.*

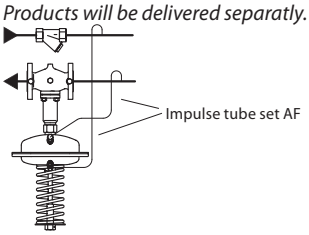


**VFG 2** Valves (metallic sealing cone)

| Picture | DN (mm) | $k_{VS}$ ($m^3/h$) | Connections | $T_{max.}$ (°C) | Code No. PN 16 | $T_{max.}$ (°C) | Code No. PN 25 | Code No. PN 40 |
|---|---|---|---|---|---|---|---|---|
| 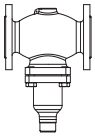 | 15 | 4.0 | Flanges acc. to EN 1092-1 | 150 | **065B2388** | 200 [1] | **065B2401** | **065B2411** |
| | 20 | 6.3 | | | **065B2389** | | **065B2402** | **065B2412** |
| | 25 | 8.0 | | | **065B2390** | | **065B2403** | **065B2413** |
| | 32 | 16 | | | **065B2391** | | **065B2404** | **065B2414** |
| | 40 | 20 | | | **065B2392** | | **065B2405** | **065B2415** |
| | 50 | 32 | | | **065B2393** | | **065B2406** | **065B2416** |
| | 65 | 50 | | | **065B2394** | | **065B2407** | **065B2417** |
| | 80 | 80 | | | **065B2395** | | **065B2408** | **065B2418** |
| | 100 | 125 | | | **065B2396** | | **065B2409** | **065B2419** |
| | 125 | 160 | | | **065B2397** | | **065B2410** | **065B2420** |
| 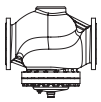 | 150 | 280 | | 150 | **065B2398** | 150 | – | **065B2421** |
| | 200 | 320 | | | **065B2399** | | – | **065B2422** |
| | 250 | 400 | | | **065B2400** | | – | **065B2423** |
| 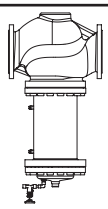 | 150 | 280 | | 200 [1] | **065B2424** | 200 [1] | – | **On request** |
| | 200 | 320 | | | **065B2425** | | – | **On request** |
| | 250 | 400 | | | **065B2426** | | – | **On request** |

[1] *at temperatures above 150 °C only with seal pots (see Accessories)*

## Ordering *(continuous)*

*Example 2:*
*Differential pressure controller; return mounting; DN 15; $k_{VS}$ 4.0; PN 25; metallic sealing; setting range 0.15-1.5 bar; $T_{max}$ 200 °C; flange;*

*– 1× VFG 2 DN 15 valve*
*Code no: **065B2401***
*– 1× AFP actuator*
*Code no: **003G1016***
*– 2× Impulse tube set AF*
*Code no: **003G1391***
*– 1× Seal pot V1*
*Code no: **003G1392***

*Products will be delivered separatly.*

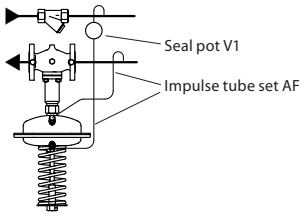


*Example 3:*
*Differential pressure; flow mounting; DN 15; $k_{VS}$ 4.0; PN 25; metallic sealing; setting range 0.15-1.5 bar; $T_{max}$ 200 °C; flange;*

*– 1× VFG 2 DN 15 valve*
*Code no: **065B2401***
*– 1× AFP actuator*
*Code no: **00G1016***
*– 2× Impulse tube set AF*
*Code no: **003G1391***
*– 1× Seal pot V1*
*Code no: **003G1392***

*Products will be delivered separatly.*

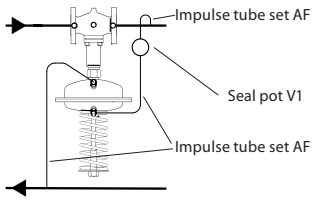


## **VFG 21** Valves (soft sealing cone)

| Picture | DN (mm) | $k_{VS}$ ($m^3/h$) | Connections | $T_{max.}$ (°C) | Code No. PN 16 |
|---|---|---|---|---|---|
| 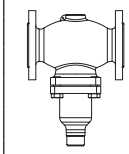 | 15 | 4.0 | Flanges acc. to EN 1092-1 | 150 | **065B2502** |
| | 20 | 6.3 | | | **065B2503** |
| | 25 | 8.0 | | | **065B2504** |
| | 32 | 16 | | | **065B2505** |
| | 40 | 20 | | | **065B2506** |
| | 50 | 32 | | | **065B2507** |
| | 65 | 50 | | | **065B2508** |
| | 80 | 80 | | | **065B2509** |
| | 100 | 125 | | | **065B2510** |
| | 125 | 160 | | | **065B2511** |
| 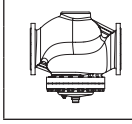 | 150 | 280 | | 150 | **065B2512** |
| | 200 | 320 | | | **065B2513** |
| | 250 | 400 | | | **065B2514** |

***Note:** other valves available on special request.*

## **AFP / AFP-9** Actuators

| Picture | Type | Δp setting range (bar) | for DN | Code No. |
|---|---|---|---|---|
| 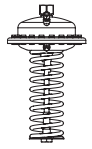 | AFP-9[1] | 1-6 | 15-125 | **003G1014** |
| | | 0.5-3 | | **003G1015** |
| | AFP | 0.15-1.5 | 15-250 | **003G1016** |
| | | 0.1-0.7 | | **003G1017** |
| | | 0.05-0.35 | | **003G1018** |

[1] *actuator does not have excess pressure safety valve*

## Accessories

| Picture | Type designation | Description | Connections | Code No. |
|---|---|---|---|---|
| | Impulse tube set AF | – 1× Copper tube Ø10 × 1 × 1500 mm<br>– 1 × compression fitting for imp. tube connection to pipe (G ¼)<br>– 2 × socket | – | **003G1391** |
| 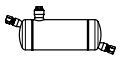 | Seal pot V1[1] | Capacity 1 liter; with compression fittings for imp. tube Ø10 | – | **003G1392** |
| | Seal pot V2[1] | Capacity 3 liter; with compression fittings for imp. tube Ø10, for actuator size 630 $cm^2$ | – | **003G1403** |
| | Compression fitting[2] | For impulse tube Ø10 connections to controller | G ¼ | **003G1468** |
| 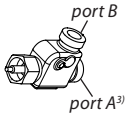  | Combination piece KF3 | For combination with pressure actuators. Electrical actuator connected on side (port B) only for ON/OFF function. | G 1¼ / 2× G 1¼ | **003G1441** |
| | Combination piece KF2 | For combination with thermostat - side connection to port B | | **003G1440** |
| | Shut off valve | For impulse tube Ø10 | – | **003G1401** |
| | Throttle valve | | | **065B2909** |

[1] *Seal pot has to be used on impulse tubes always when $T_{max} \geq 150$ °C*
[2] *Consist of a nipple, compression ring and nut*
[3] *Port A - for connection of any type of actuator*


© Danfoss | 2018.10

## Ordering *(continuous)*

### Service kits

| Picture | Type designation | DN (mm) | $k_{vs}$ ($m^3/h$) | Code No. for VFG 2 | Code No. for VFG 21 |
|---|---|---|---|---|---|
| | Valve insert | 15 | 4.0 | **065B2796** | **065B2790** |
| | | 20 | 6.3 | **065B2797** | **065B2791** |
| | | 25 | 8 | **065B2798** | **065B2792** |
| | | 32 | 16 | | |
| | | 40 | 20 | **065B2799** | **065B2793** |
| | | 50 | 32 | | |
| | | 65 | 50 | **065B2800** | **065B2794** |
| | | 80 | 80 | | |
| | | 100 | 125 | **065B2801** | **065B2795** |
| | | 125 | 160 | | |
| | | 150 | 280 | **065B2964** | **065B2966** |
| | | 250 | 400 | **065B2965** | – |
| | Stuffing cone (with EPDM O-rings) | | | **003G1464** | |

## Technical data

### Valve

| **Nominal diameter** | | **DN** | **15** | **20** | **25** | **32** | **40** | **50** | **65** | **80** | **100** | **125** | **150** | **200** | **250** |
|---|---|---|---|---|---|---|---|---|---|---|---|---|---|---|---|
| $k_{vs}$ value | | $m^3/h$ | 4.0 | 6.3 | 8.0 | 16 | 20 | 32 | 50 | 80 | 125 | 160 | 280 | 320 | 400 |
| Cavitation factor z | | | 0.6 | 0.6 | 0.6 | 0.55 | 0.55 | 0.5 | 0.5 | 0.45 | 0.4 | 0.35 | 0.3 | 0.2 | 0.2 |
| Leakage acc. to standard IEC 534 (% of $k_{vs}$) | VFG 2 | | ≤ 0.03 | | | | | | | | | | ≤ 0.05 | | |
| | VFG 21 | | ≤ 0.01 | | | | | | | | | | | | |
| Nominal pressure | | PN | 16, 25, 40 | | | | | | | | | | | | |
| Max. differential pressure | PN 16 | bar | 16 | | | | | | | | 15 | | 12 | 10 | |
| | PN 25, 40 | | 20 | | | | | | | | | | | | |
| Media | | | Circulation water / glycolic water up to 30 % | | | | | | | | | | | | |
| Media pH | | | Min. 7, max. 10 | | | | | | | | | | | | |
| Media temperature | VFG 2 | °C | 2 … 150 / 2 … 200 [1] | | | | | | | | | | 2 … 150 (200 [2]) | | |
| | VFG 21 | | 2 … 150 | | | | | | | | | | | | |
| Connections | | | Flange | | | | | | | | | | | | |
| **Materials** | | | | | | | | | | | | | | | |
| Valve body | PN 16 | | Grey cast iron EN-GJL-250 (GG-25) | | | | | | | | | | | | |
| | PN 25 | | Ductile iron EN-GJS-400(GGG-40.3) | | | | | | | | | | | | |
| | PN 40 | | Cast steel GP240GH (GS-C 25) | | | | | | | | | | | | |
| Valve seat | | | Stainless steel, mat. No. 1.4021 | | | | | | | | | | Stainless steel, mat. No. 1.4313 | | |
| Valve cone | | | Stainless steel, mat. No. 1.4404 | | | | | | | | | | Stainless steel, mat. No. 1.4021 | | |
| Sealing | VFG 2 | | Metal | | | | | | | | | | | | |
| | VFG 21 | | EPDM | | | | | | | | | | | | |
| Pressure relieve system | | | Bellows (Stainless steel, mat. No. 1.4571) | | | | | | | | | | Diaphragm (EPDM) | | |

[1] *at temperatures above 150 °C only with seal pots (see Accessories)*
[2] *on request*

### Actuators

| **Type** | | **AFP-9** [1] | | **AFP** | | |
|---|---|---|---|---|---|---|
| Actuator size | $cm^2$ | 80 | | 250 | | 630 |
| Max. operating pressure | bar | 25 | | 25 | | 16 |
| Diff. pressure setting ranges and spring colours | bar | red | yellow | red | yellow | yellow |
| | | 1-6 | 0.5-3 | 0.15-1.5 | 0.1-0.7 | 0.05-0.35 |
| **Materials** | | | | | | |
| Actuator housing | | Steel, mat. No. 1.0338, zinc plated | | | | |
| Control diaphragm | | EPDM (Rolling; fibre enforced) | | | | |

[1] *Actuator does not have excess pressure safety valve*

## Application principles

*– Return mounting*

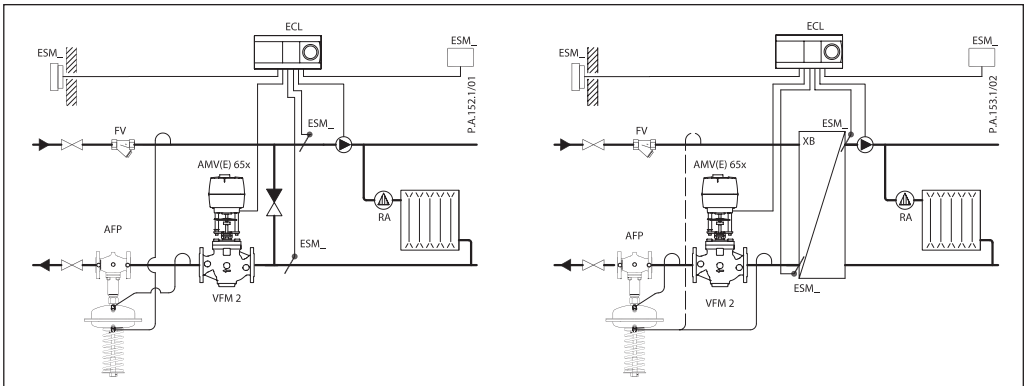


*Direct-connected heating system* *Indirectly connected heating system*

*– Flow mounting*

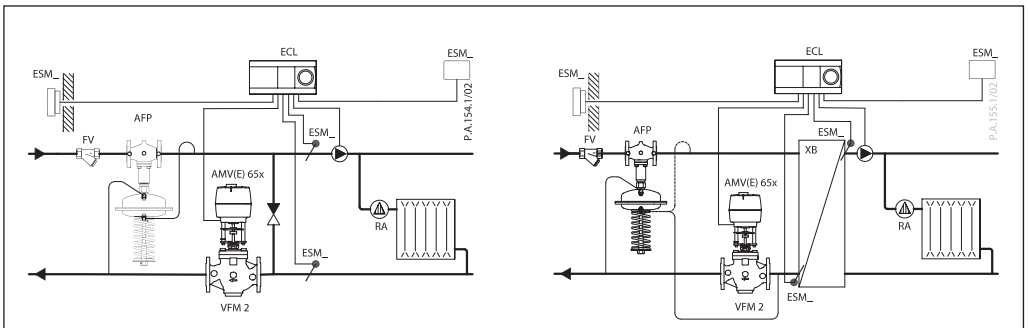


*Direct-connected heating system* *Indirectly connected heating system*

## Combinations

***Example***
*Differential pressure and temperature controller*
*AFP / AFT06 / VFG 2; DN 15; PN 16;*
*$k_{VS}$ 4.0; $T_{max.}$ 150 °C; 0.15-1.5 bar;*
*range 20 … 90 °C;*

*– 1× VFG 2 DN 15 valve*
*Code no:* ***065B2388***
*– 1× AFP actuator*
*Code no:* ***003G1016***
*– 1× AFT06 thermostat*
*Code no:* ***065-4391***
*– 1× Combination piece KF2*
*Code no:* ***003G1398***
*– 2× Impulse tube set AF*
*Code no:* ***003G1391***

*Parts will be delivered separately.*

***Note:***
*For AFT 06 and STFW thermostats data see relevant data sheets*

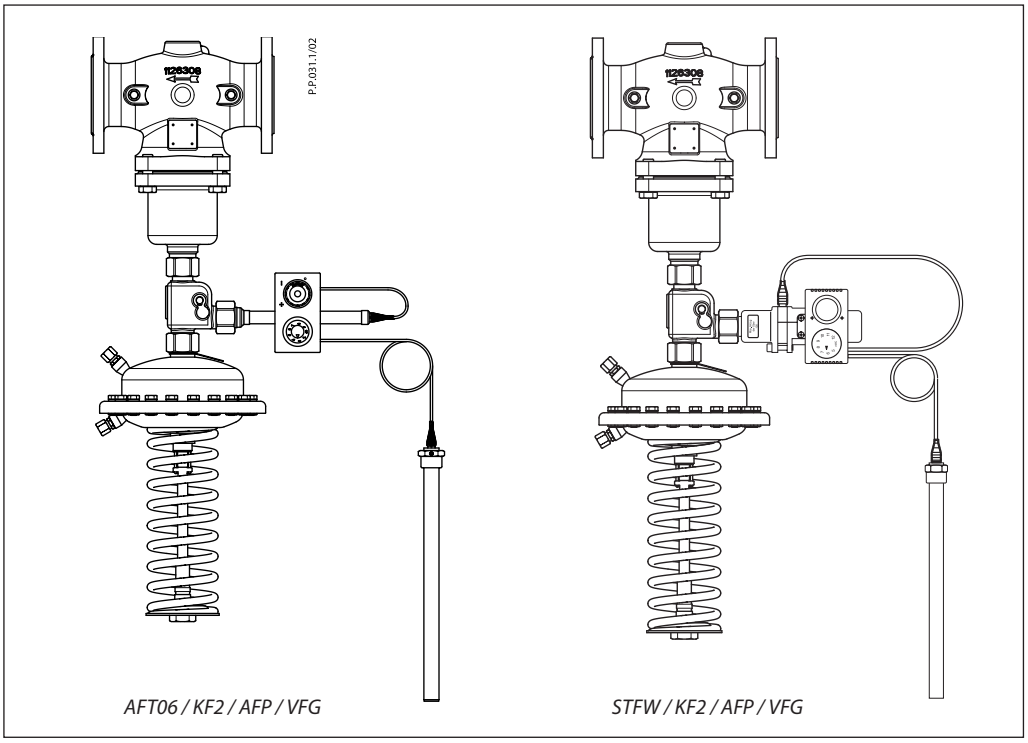


*AFT06 / KF2 / AFP / VFG* *STFW / KF2 / AFP / VFG*

 © Danfoss | 2018.10

**Installation position**

DN 15-80 $T_{max}$ ≤ 120 °C

The controllers can be installed in any position.

DN 15-80 $T_{max}$ > 120 °C; DN 100-250

The controllers can be installed in horizontal pipes only, with a pressure actuator oriented downwards.

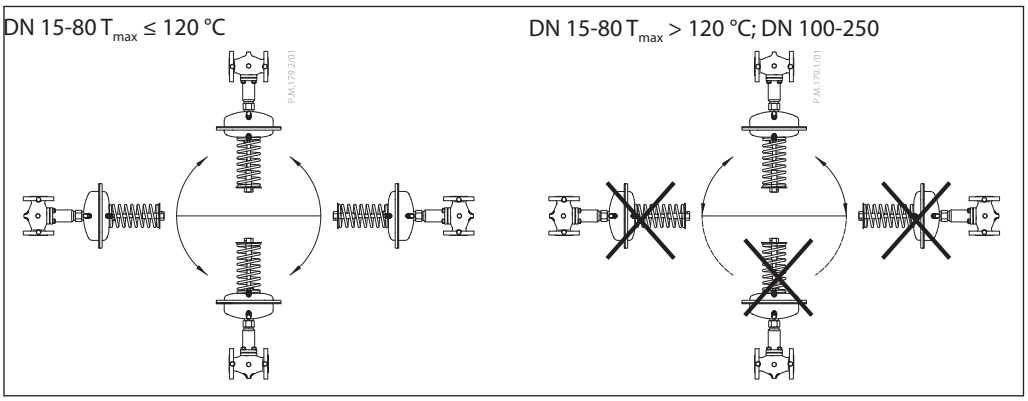


**Pressure temperature diagram**

*Working area is below P-T line and it ends at Tmax for each valve*

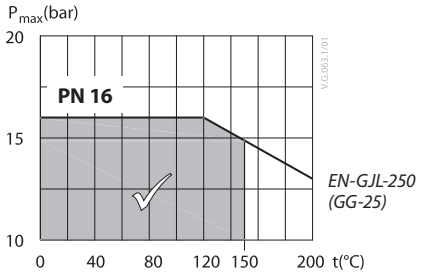


*Maximum allowed operating pressure as a function of media temperature (according to EN 1092-2)*

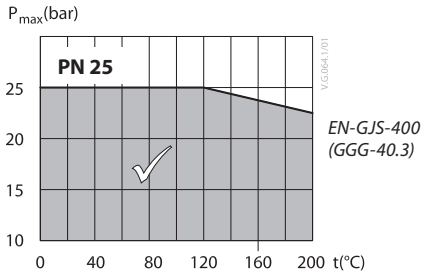


*Maximum allowed operating pressure as a function of media temperature (according to EN 1092-2)*

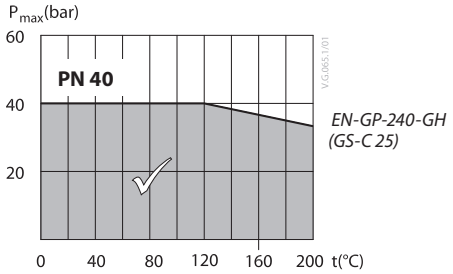


*Maximum allowed operating pressure as a function of media temperature (according to EN 1092-1)*

## Sizing

– *Directly connected heating system*

**Example 1**
Motorised control valve (MCV) for mixing circuit in direct-connected heating system requires differential pressure of 0.3 bar (30 kPa).

Given data:
$Q_{max}$ = 2.2 m³/h (1200 l/h)
$\Delta p_{min}$ = 0.7 bar (70 kPa)
*$\Delta p_{circuit}$ = 0.1 bar (10 kPa)
$\Delta p_{MCV}$ = 0.3 bar (30 kPa) selected

*Remark
$\Delta p_{circuit}$ corresponds to the required pump pressure in the heating circuit and is not to be considered when sizing the AFP.

The differential pressure set value is:
$\Delta p_{set\ value} = \Delta p_{MCV}$
$\Delta p_{set\ value}$ = 0.3 bar (30 kPa)

The total pressure loss across the controller is:
$\Delta p_{AFP} = \Delta p_{min} - \Delta p_{MCV} = 0.7 - 0.3$
$\Delta p_{AFP}$ = 0.4 bar (40 kPa)

Possible pipe pressure losses in tubes, shut-off fittings, heatmeters, etc. are not included.

$k_v$ value is calculated according to formula:

$$k_v = \frac{Q_{max}}{\sqrt{\Delta p_{AFP}}} = \frac{2,2}{\sqrt{0,4}}$$

$k_v$ = 3.5 m³/h

Solution:
The example selects AFP DN 15, $k_{VS}$ value 4.0, with differential pressure setting range 0.15-1.5 bar.

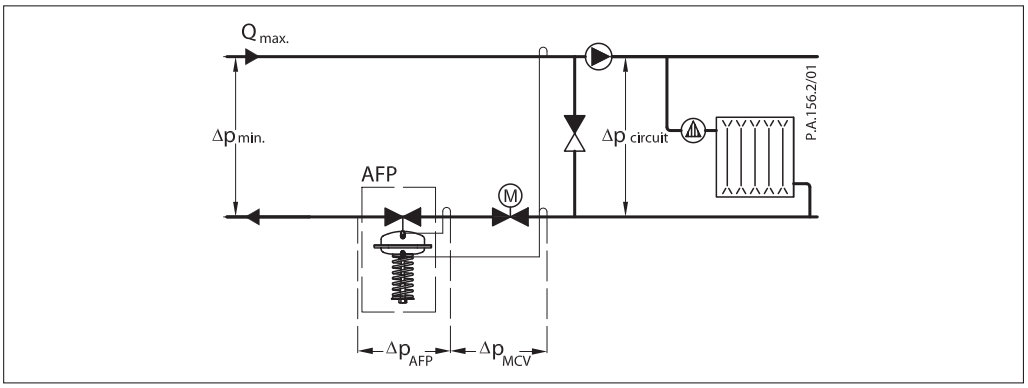


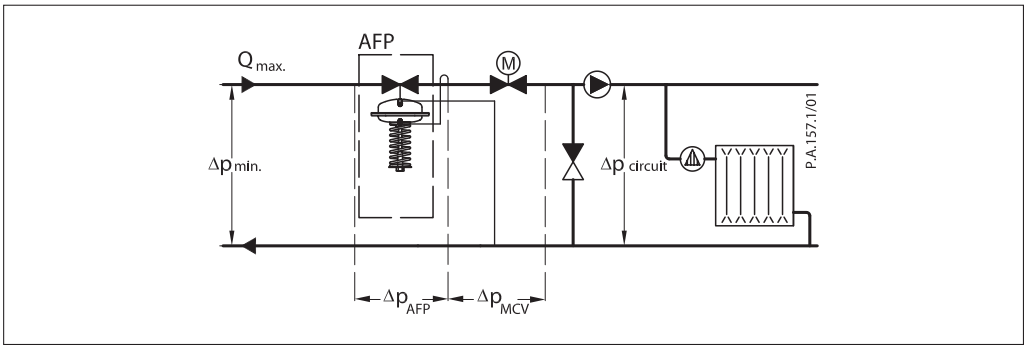



© Danfoss | 2018.10

**Sizing** *(continuous)*

– *Indirectly connected heating system*

**Example 2**
Motorised control valve (MCV) for indirectly connected heating system requires differential pressure of 0.5 (50 kPa) bar.

*Given data:*
$Q_{max}$ = 2.4 m³/h (1250 l/h)
$\Delta p_{min}$ = 1.0 bar (100 kPa)
$\Delta p_{exchanger}$ = 0.05 bar (5 kPa)
$\Delta p_{MCV}$ = 0.4 bar (40 kPa) selected

The differential pressure set value is:
$\Delta p_{set\ value} = \Delta p_{exchanger} + \Delta p_{MCV} = 0.05 + 0.4$
$\Delta p_{set\ value} = 0.45$ bar (45 kPa)

The total pressure loss across the controller is:
$\Delta p_{AFP} = \Delta p_{min} - \Delta p_{exchanger} - \Delta p_{MCV} = 1.0 - 0.05 - 0.4$
$\Delta p_{AFP} = 0.55$ bar (55 kPa)

Possible pipe pressure losses in tubes, shut-off fittings, heatmeters, etc. are not included.

$k_v$ value is calculated according to formula:

$$k_v = \frac{Q_{max}}{\sqrt{\Delta p_{AFP}}} = \frac{2,4}{\sqrt{0,55}}$$

$k_v$ = 3.2 m³/h

*Solution:*
The example selects AFP DN 15, $k_{VS}$ value 4.0, with differential pressure setting range 0.15-1.5 bar.

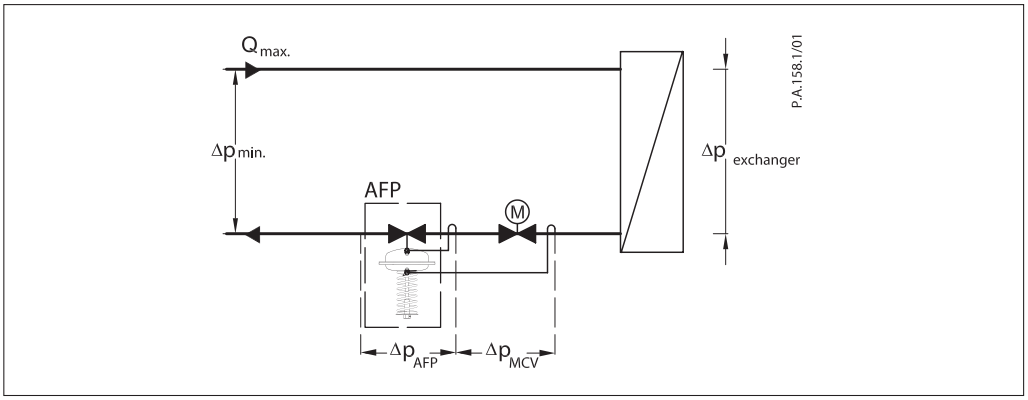


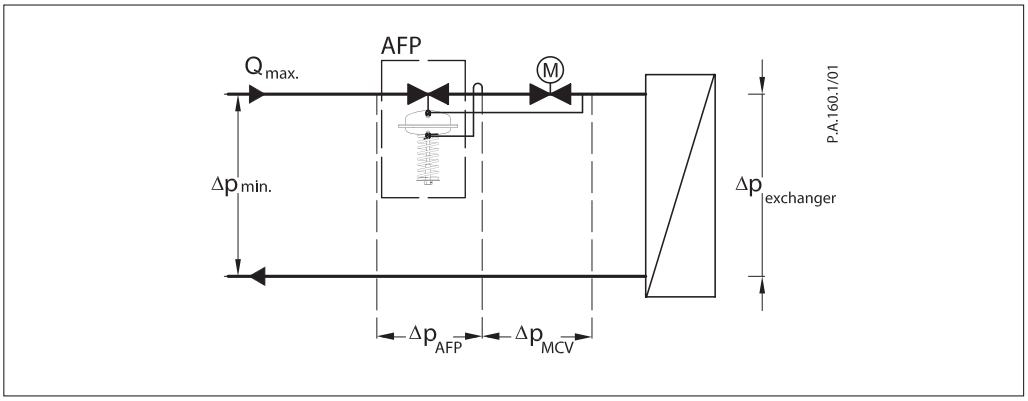

## Design

1. Valve body
2. Cover
3. Valve seat
4. Valve insert
5. Pressure relieved valve cone
6. Valve stem
7. Bellows for pressure relief of valve cone
8. Actuator
9. Diaphragm for pressure relief of valve cone
10. Control diaphragm for differential pressure control
11. Excess pressure safety valve
12. Setting spring for diff. pressure control
13. Adjuster for diff. pressure setting, prepared for sealing
14. Stuffing cone
15. Union nut
16. Compression fitting for impulse tube
17. Upper casing of diaphragm
18. Lower casing of diaphragm
19. Valve body extension
20. Shut off valve for water filling
21. Closing plug

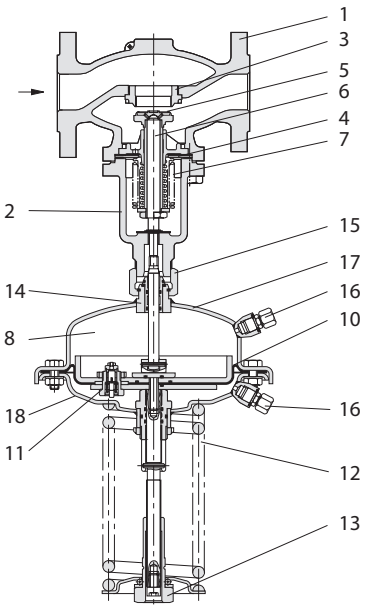


*AFP / VFG 2 DN 15-125*

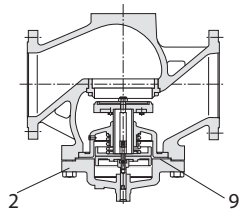


*VFG 2 DN 150-250, $T_{max}$ 150 °C*

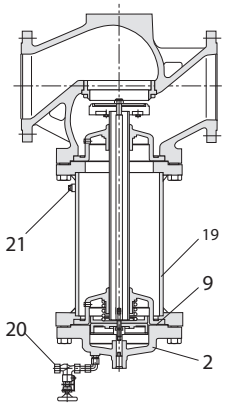


*VFG 2 DN 150-250, $T_{max}$ 200 °C*

## Function

Pressure changes from flow and return pipes are being transferred through the impulse tubes to the actuator chambers and act on control diaphragm for diff. pressure control. The diff. pressure is controlled by means of setting spring for diff. pressure control. Control valve closes on rising differential pressure and opens on falling differential pressure to maintain constant differential pressure.

Controller is equipped with excess pressure safety valve (not AFP-9), which protects control diaphragm for diff. pressure control from too high differential pressure.

## Settings

*Differential pressure setting*
Differential pressure setting is being done by the adjustment of the setting spring for diff. pressure control. The adjustment can be done by means of spring for diff. pressure setting and/or pressure indicators.


© Danfoss | 2018.10

## Dimensions

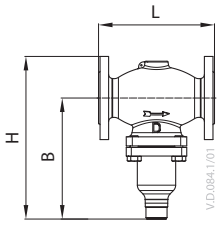


*VFG DN 15-125*

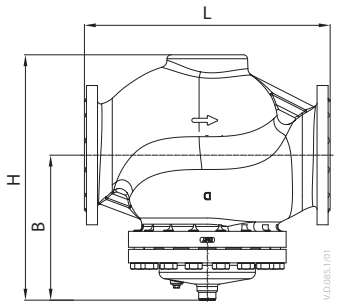


*VFG DN 150-250*

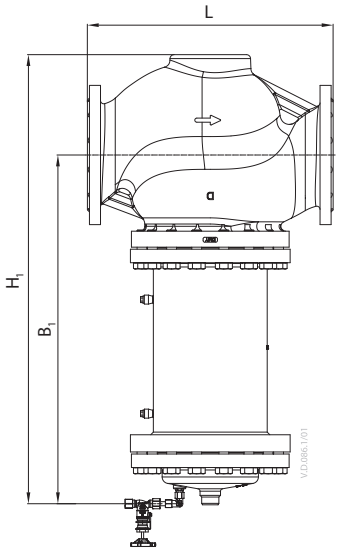


*VFG DN 150-250*
*with valve body extension up to 200 °C*

**VFG 2, VFG 21** Valves

| DN | | | 15 | 20 | 25 | 32 | 40 | 50 | 65 | 80 | 100 | 125 | 150 | 200 | 250 |
|---|---|---|---|---|---|---|---|---|---|---|---|---|---|---|---|
| L | | mm | 130 | 150 | 160 | 180 | 200 | 230 | 290 | 310 | 350 | 400 | 480 | 600 | 730 |
| B | | mm | 213 | 213 | 239 | 239 | 241 | 241 | 276 | 276 | 381 | 381 | 326 | 354 | 401 |
| H | | mm | 267 | 267 | 304 | 304 | 323 | 323 | 370 | 370 | 505 | 505 | 505 | 591 | 661 |
| Weight | PN 16 / 25 | kg | 7.5 | 8.5 | 10 | 12 | 15 | 18 | 27.5 | 30 | 58 | 68 | 115 | 185 | 323 |
| | PN 40 | kg | | | | | | | 30 | 32.5 | 60.5 | 69 | 141 | 253 | 333 |
| $B_1$ | | mm | | | | | | | | | | | 620 | 852 | 1199 |
| $H_1$ | | mm | | | | | | | | | | | 799 | 1089 | 1459 |
| Weight (valve with body extension) | PN 16 / 25 | kg | | | | | | | | | | | 154 | 301 | 469 |
| | PN 40 | kg | | | | | | | | | | | 179 | 336 | 505 |

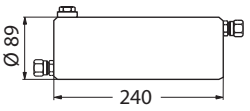


*Seal pot V1*

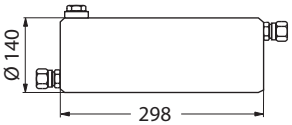


*Seal pot V2*

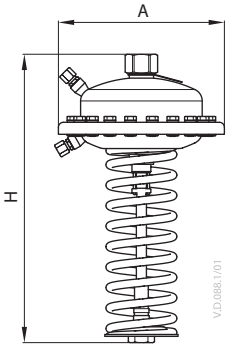


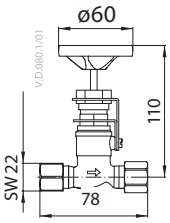


*Shut off valve*

**AFP** Actuator

| Actuator size | cm² | 80 | 250 | 630 |
|---|---|---|---|---|
| A | mm | 172 | 263 | 380 |
| H | mm | 430 | 470 | 520 |
| Weight | kg | 7.5 | 13 | 28 |

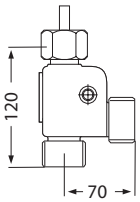


*Comb. piece KF2, KF3*

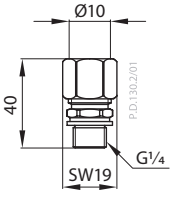


*Compression fitting*

Data sheet

# Diff. pressure relief controller (PN 10)
# AVDA - internal thread

## Description

AVDA is self-acting differential pressure relief controller used for constant flow control or bypass control. Controller opens on rising differential pressure.

The controller has a control valve, an actuator with one control diaphragm and handle for differential pressure setting.

For apartment block heating, district heating plant and central heating systems.

**Main data:**
- DN 15, 20, 25
- $k_{vs}$ 1.9, 3.4, 5.5
- PN 10
- Setting range:
  0.1 - 1.2 bar
- Temperature:
  - Circulation water / glycolic water up to 30%:
    -25 … 130 °C
- Connections: Int. thread

## Ordering

*Example:*
*Differential pressure relief controller, DN 15, $k_{vs}$ 1.9, PN 10, setting range 0.1 - 1.2, $t_{max}$ 130°C, int. thread*

- *1x AVDA DN 15 controller*
  *Code No:* ***003N0038***

**AVDA** Controller

| Picture | DN | $k_{vs}$ (m³/h) | PN | Setting range (bar) | Connection-valve (Int. thread ISO 7/1) | Connection - Impulse tube flare | Code No.[1)] |
|---|---|---|---|---|---|---|---|
| 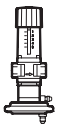 | 15 | 1.9 | 10 | 0.1 - 1.2 | Rp ½ | 7/16-20 UNF | **003N0038** |
| | 20 | 3.4 | | | Rp ¾ | | **003N0039** |
| | 25 | 5.5 | | | Rp 1 | | **003N0040** |

*[1)] The code no. includes 2 impulse tubes (0.5 and 1.5 m) with compression fitting.*

### Service kits

| Picture | Type designation | DN | Code No. |
|---|---|---|---|
| | *Repair set*<br>Two diaphragms, two O-rings, one rubber cone, one tube of grease and eight valve cover screws | 15 | **003N4006** |
| | | 20 | **003N4007** |
| | | 25 | **003N4008** |
| | Valve body (int. thread) | 15 | **003N2030** |
| | | 20 | **003N2040** |
| | | 25 | **003N2050** |
| | Nipple for impulse tube connection to pipe | | **631X4700** |
| | Valve stuffing box | | **065F0006** |
| | Diaphragm housing | | **003N0065** |

## Technical data

| Nominal diameter | DN | 15 | 20 | 25 |
|---|---|---|---|---|
| $k_{vs}$ value | m³/h | 1.9 | 3.4 | 5.5 |
| Cavitation factor z | | 0.4 | | |
| Nominal pressure | PN | 10 | | |
| Max. differential pressure | bar | 7 | | |
| Medium | | Circulation water / glycolic water up to 30% | | |
| Medium pH | | Min. 7, max. 10 | | |
| Medium temperature | °C | -25 … +130 °C | | |
| Connections (valve) | | Internal thread | | |
| **Materials** | | | | |
| Valve body | | MS 58, hot-pressed, DIN 17660, W.No. 2.0402, CuZn40Pb2 | | |
| Valve seat | | Cr Ni steel, DIN 17660, W.No. 1.4301 | | |
| Valve cone | | NBR-rubber | | |
| Spindle | | Dezincing-free brass, BS 2874/CZ132 | | |
| Diaphragm housing | | Zinc-cromated steel, DIN 1624, W.No. 1.0338 | | |
| Diaphragm | | EPDM-rubber | | |

## Application principles

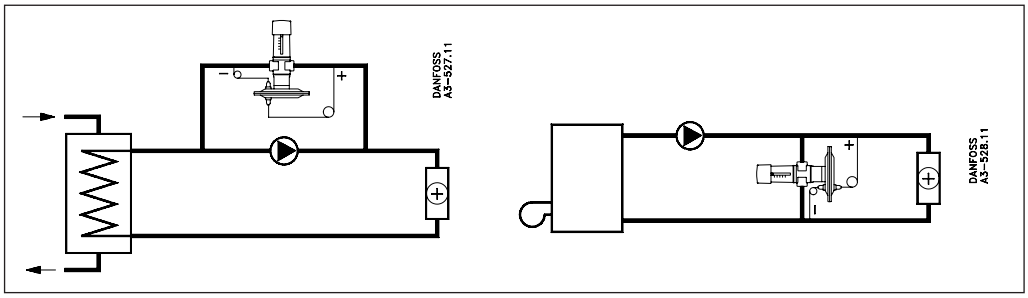


## Installation positions

The valve body can be installed in any position. A Danfoss FV strainer is recommended.

Impulse tubes have to be installed vertically or horizontally onto the main pipe, never downwards.

Needle valve can be installed between main pipe and impulse tube, if necessary.

(+) impulse tube has to be connected to flow line, (-) impulse tube has to be connected to return line. Setting can be simplified by using pressure indicators (manometers) placed close to impulse tube connections.

By turning diaphragm housing downwards the letter "RA" on valve housing must be oriented upright.

## Design

1. Handle for differential pressure setting
2. Spring housing
3. Setting spring
4. Spring guide
5. Diaphragm
6. Valve cone
7. Spindle
8. O-ring
9. O-ring gland
10. Diaphragm housing
11. Control diaphragm
12. Nipple for impulse tube
13. Lead seal

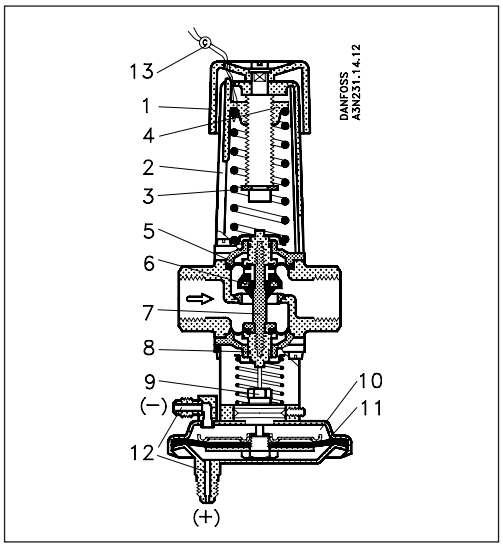

## Sizing

*Constant flow control*

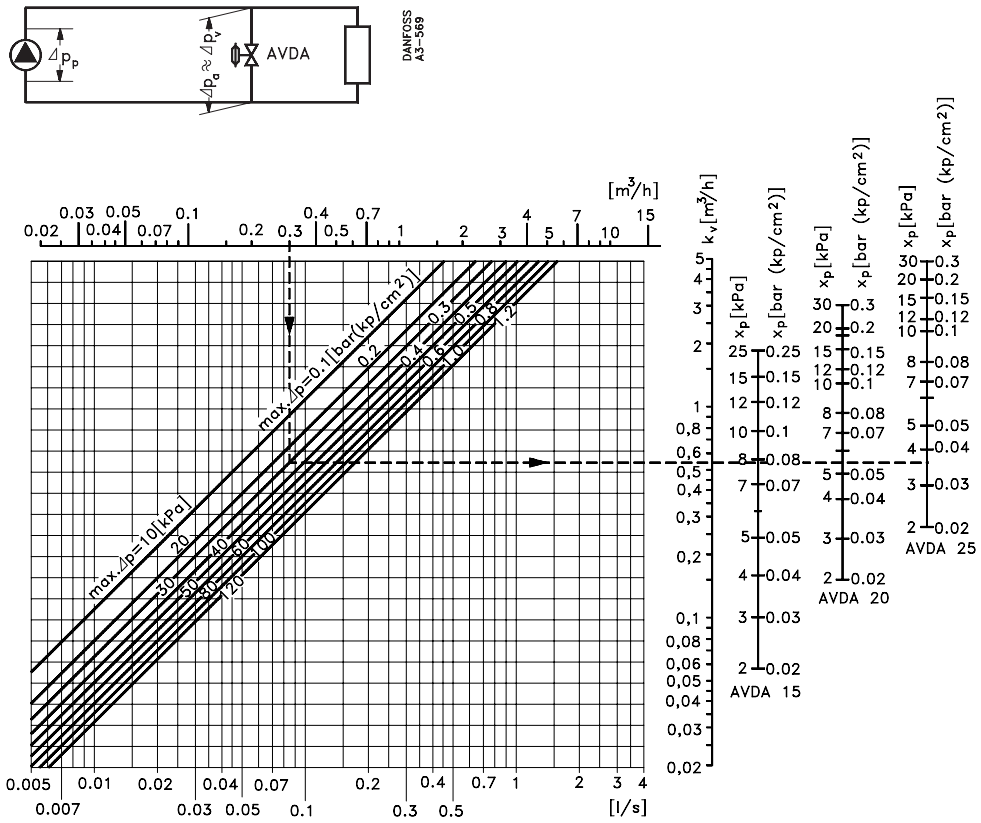


### Example

*Given*
Assuming a pressure drop in the line from the pump to and from the valve connections of nil so that $\Delta p_p = \Delta p_a = \Delta p_v$, the plant differential pressure at max. load = 0.25 bar.

*Condition*
Maximum plant differential pressure with closed radiator valves limited to 0.3 bar. Pump water volume (Q) for this condition = 0.3 m³/h.

*Required*
A pressure relief control able to circulate a water volume of at least 0.3 m³/h at $\Delta p_a$ = 0.3 bar and which will remain closed under max. plant load, $\Delta p_a$ = 0.25 bar.

*Method*
Locate the necessary water volume, Q = 0.3 m³/h, on the horizontal axis in the nomogram.

From the 0.3 m³/h point, take a vertical line up to intersect the curve that gives the pressure at which the valve must be completely open (here, 0,3 bar). From the intesection, take a horizontal line to intersect the vertical axes on the right. These axes give the pressure rise $X_P$ that is necessary across the valve before it can give the required capacity Q.

Since the pressure rise in this example is 0.3 - 0.25 = 0.05 bar, a valve where $X_P \leq 0.05$ bar could be used, i.e. an AVDA 25.

This setting is therefore 0.25 bar, i.e. the valve is closed when the differential pressure across it is 0.25 bar.

A pressure gauge can be used in making the setting, or an approximate setting can be made as shown in the associated installation example.

## Settings

*AVDA 0.1 - 1.2 bar*
*Scale setting*

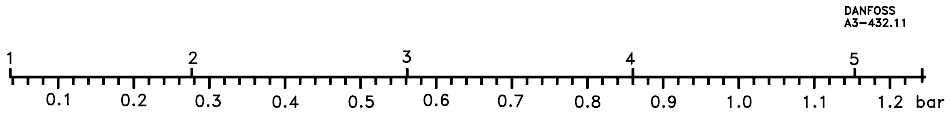


*Relation between scale numbers and differential pressure. The values given are indicative only.*

## Dimensions

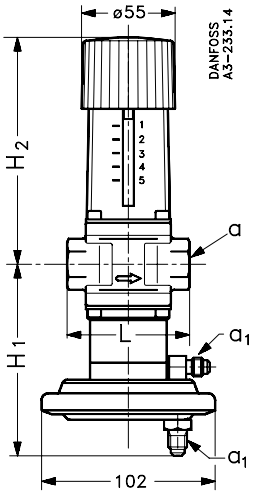


| Type | $H_1$ mm | $H_2$ mm | L mm | a ISO 7/1 | $a_1$ flare |
|---|---|---|---|---|---|
| DN 15 | 112 | 133 | 72 | $R_p$½ | 7/16-20 UNF |
| DN 20 | 112 | 133 | 90 | $R_p$¾ | 7/16-20 UNF |
| DN 25 | 117 | 138 | 95 | $R_p$1 | 7/16-20 UNF |

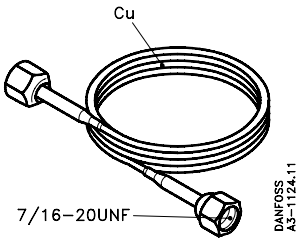


*Impulse tube*

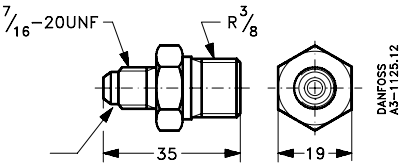


*Nipple*

Danfoss can accept no responsibility for possible errors in catalogues, brochures and other printed material. Danfoss reserves the right to alter its products without notice. This also applies to products already on order provided that such alterations can be made without subsequential changes being necessary in specifications already agreed.
All trademarks in this material are property of the respective companies. Danfoss and the Danfoss logotype are trademarks of Danfoss A/S. All rights reserved.

ENGINEERING
TOMORROW

**Data sheet**

# Differential pressure relief controller AVPA (PN 16 and PN 25)

## Description

AVPA (PN 16) AVPA (PN 25)

AVPA is a self-acting differential pressure relief controller primarily for use in district heating systems. The controller is normally closed and opens on rising differential pressure.

The controller has a control valve, an actuator with one control diaphragm and handle for differential pressure setting.

**Main data:**

- DN 15-50
- $k_{VS}$ 4.0-25 m³/h
- PN 16, 25
- Setting range:
  0.05-0.5 bar / 0.2-1.0 bar / 0.3-2.0 bar
- Temperature:
  - Circulation water / glycolic water up to 30 %: 2 … 150 °C
- Connections:
  - External thread (weld-on, thread and flange tailpieces)
  - Flange

## Ordering

*Example:*
*Differential pressure relief controller, DN 15, $k_{VS}$ 4.0; PN 25; setting range 0.2-1.0 bar; $T_{max}$ 150 °C; ext. thread*

- *1× AVPA DN 15 controller*
  *Code no:* ***003H6602***

*Option:*
- *1× Weld-on tailpieces*
  *Code no:* ***003H6908***

*The controller will be delivered completely assembled, inclusive impulse tubes between valve and actuator.*

**AVPA PN 16** Controller

| Picture | DN (mm) | $k_{VS}$ (m³/h) | Connection | | Δp setting range (bar) | Code No. | Δp setting range (bar) | Code No. |
|---|---|---|---|---|---|---|---|---|
| 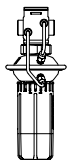 | 15 | 4.0 | Cylindr. ext. thread acc. to ISO 228/1 | G ¾ A | 0.05-0.5 | **003H6593** | 0.2-1.0 | **003H6596** |
| | 20 | 6.3 | | G 1 A | | **003H6594** | | **003H6597** |
| | 25 | 8.0 | | G 1¼ A | | **003H6595** | | **003H6598** |

**AVPA PN 25** Controller

| Picture | DN (mm) | $k_{VS}$ (m³/h) | Connection | | Δp setting range (bar) | Code No. | Δp setting range (bar) | Code No. |
|---|---|---|---|---|---|---|---|---|
| 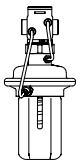 | 15 | 4.0 | Cylindr. ext. thread acc. to ISO 228/1 | G ¾ A | 0.2-1.0 | **003H6602** | 0.3-2.0 | **003H6605** |
| | 20 | 6.3 | | G 1 A | | **003H6603** | | **003H6606** |
| | 25 | 8.0 | | G 1¼ A | | **003H6604** | | **003H6607** |
| | 32 | 12.5 | | G 1¾ A | | **003H6599** | | - |
| | 40 | 16 | | G 2 A | | **003H6600** | | - |
| | 50 | 20 | | G 2½ A | | **003H6601** | | - |
| 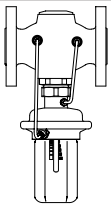 | 32 | 12.5 | Flanges PN 25, acc. to EN 1092-2 | | | **003H6608** | | **003H6611** |
| | 40 | 20 | | | | **003H6609** | | **003H6612** |
| | 50 | 25 | | | | **003H6610** | | **003H6613** |

## Ordering *(continuous)*

### Accessories

| Picture | Type designation | DN | Connection | | Code No. |
|---|---|---|---|---|---|
| | Weld-on tailpieces | 15 | - | | **003H6908** |
| | | 20 | | | **003H6909** |
| | | 25 | | | **003H6910** |
| | | 32 | | | **003H6911** |
| | | 40 | | | **003H6912** |
| | | 50 | | | **003H6913** |
| | External thread tailpieces | 15 | Conical ext. thread acc. to EN 10226-1 | R ½″ | **003H6902** |
| | | 20 | | R ¾″ | **003H6903** |
| | | 25 | | R 1″ | **003H6904** |
| | | 32 | | R 1¼″ | **003H6905** |
| | | 40 | | R 1½ | **065B2004** |
| | | 50 | | R 2 | **065B2005** |
| 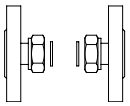 | Flange tailpieces | 15 | Flanges PN 25, acc. to EN 1092-2 | | **003H6915** |
| | | 20 | | | **003H6916** |
| | | 25 | | | **003H6917** |

### Service kits

| Picture | Type designation | Δp setting range (bar) | Code No. |
|---|---|---|---|
| 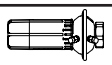 | Actuator with adjustable handle PN 16 | 0.05-0.5 | **003H6823** |
| | | 0.2-1.0 | **003H6824** |
| 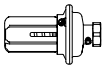 | Actuator with adjustable handle PN 25 | 0.2-1.0 | **003H6834** |
| | | 0.3-2.0 | **003H6835** |

## Technical data

### Valve (for AVPA PN 16)

| **Nominal diameter** | | **DN** | **15** | **20** | **25** |
|---|---|---|---|---|---|
| $k_{vs}$ value | | $m^3/h$ | 4.0 | 6.3 | 8.0 |
| Cavitation factor z | | | ≥ 0.6 | | |
| Leakage acc. to standard IEC 534 | | % of $k_{vs}$ | ≤ 0.2 | | |
| Nominal pressure | | PN | 25 | | |
| Max. differential pressure | | bar | 12 | | |
| Medium | | | Circulation water / glycolic water up to 30% | | |
| Medium pH | | | Min. 7, max. 10 | | |
| Medium temperature | | ˚C | 2 … 150 | | |
| Connections | valve | | External thread | | |
| | tailpieces | | Weld-on, external thread and flange | | |
| **Materials** | | | | | |
| Valve body | | | Red bronze CuSn5ZnPb (Rg5) | | |
| Valve seat | | | Stainless steel, mat. No. 1.4571 | | |
| Valve cone | | | Dezincing free brass CuZn36Pb2As | | |
| Sealing | | | EPDM | | |
| Pressure relieve system | | | Piston | | |

### Actuator (for AVPA PN 16)

| **Type** | | **AVPA PN 16** | |
|---|---|---|---|
| Actuator size | $cm^2$ | 39 | |
| Nominal pressure | PN | 16 | |
| Diff. pressure setting ranges and spring colours | bar | 0.05-0.5 | 0.2-1.0 |
| | | grey | black |
| **Materials** | | | |
| Actuator housing | | Zinc plated, DIN 1624, No. 1.0338 | |
| Diaphragm | | EPDM | |
| Impulse tube | | Copper tube Ø6 × 1 mm | |


© Danfoss | 2018.02

## Technical data *(continuous)*

**Valve** (for AVPA PN 25)

| Nominal diameter | | DN | 15 | 20 | 25 | 32 | 40 | 50 |
|---|---|---|---|---|---|---|---|---|
| $k_{VS}$ value | | m³/h | 4.0 | 6.3 | 8.0 | 12.5 | 16/20 [1] | 20/25 [1] |
| Cavitation factor z | | | ≥ 0.6 | | ≥ 0.55 | | ≥ 0.5 | |
| Leakage acc. to standard IEC 534 | | % of $k_{VS}$ | ≤ 0.02 | | | ≤ 0.05 | | |
| Nominal pressure | | PN | 25 | | | | | |
| Max. differential pressure | | bar | 20 | | | 16 | | |
| Medium | | | Circulation water / glycolic water up to 30 % | | | | | |
| Medium pH | | | Min. 7, max. 10 | | | | | |
| Medium temperature | | °C | 2 …150 | | | | | |
| Connections | valve | | Thread | | | Thread and flange | | |
| | tailpieces | | Weld-on and external thread | | | | | |
| | | | Flange | | | - | | |
| **Materials** | | | | | | | | |
| Valve body | thread | | Red bronze CuSn5ZnPb (Rg5) | | | Ductile iron EN-GJS-400-18-LT (GGG 40.3) | | |
| | flange | | - | | | | | |
| Valve seat | | | Stainless steel, mat. No. 1.4571 | | | | | |
| Valve cone | | | Dezincing free brass CuZn36Pb2As | | | | | |
| Sealing | | | EPDM | | | | | |
| Pressure relieve system | | | Piston | | | | | |

[1] *Flange valve body*

**Actuator** (for AVPA PN 25)

| Type | | | AVPA PN 25 | |
|---|---|---|---|---|
| Actuator size | | cm² | 54 | |
| Nominal pressure | | PN | 25 | |
| Diff. pressure setting ranges and spring colours | | bar | 0.2-1.0 | 0.3-2.0 |
| | | | yellow | red |
| Materials | | | | |
| Actuator housing | Upper casing of diaphragm | | Stainless steel, mat. No.1.4301 | |
| | Lower casing of diaphragm | | Dezincing free brass CuZn36Pb2As | |
| Diaphragm | | | EPDM | |
| Impulse tube | | | Copper tube Ø6 × 1 mm | |

## Application principle

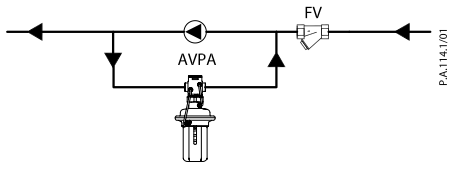


*Differential pressure control for a pump in bypass*

## Installation positions

Up to medium temperature of 100 °C the controllers can be installed in any position.

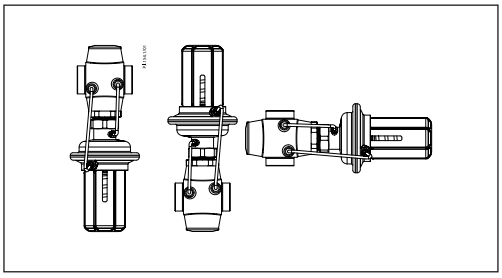

For higher temperatures the controllers have to be installed in horizontal pipes only, with a pressure actuator oriented downwards.

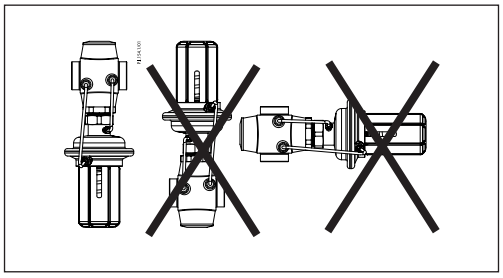

## Pressure temperature diagram

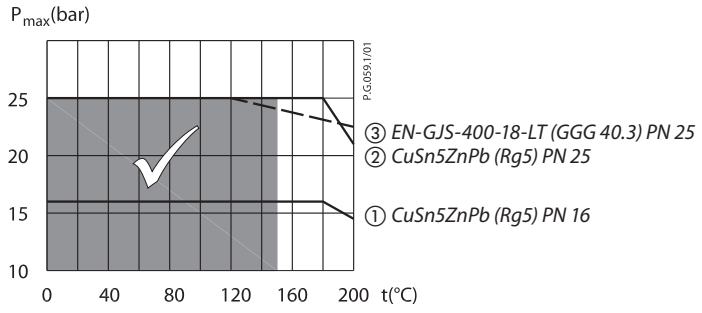


*Maximum allowed operating pressure as a function of medium temperature (according to EN 1092-2 and EN 1092-3).*

## Sizing

Given data:
$Q_{max}$ = 4.5 m³/h
$\Delta p_{AVPA}$ = 1.4 bar
Nominal pressure PN 25

$k_v$ value is calculated according to formula:

$$k_v = \frac{Q_{max}}{\sqrt{\Delta p_{AVPA}}} = \frac{4.5}{\sqrt{1.4}}$$

$k_v$ = 3.8 m³/h

Solution:
The example selects AVPA PN 25 DN 15, $k_{VS}$ value 4.0 with differential pressure setting range 0.3-2.0 bar.

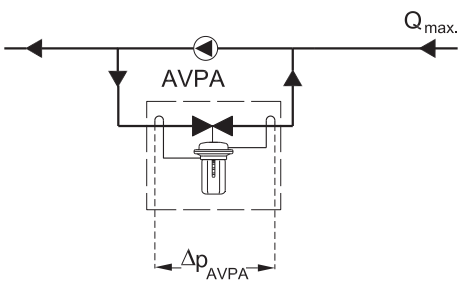


## Design

1. Valve body
2. Valve insert
3. Pressure relieved valve cone
4. Valve stem
5. Control diaphragm for diff. pressure control
6. Setting spring for diff. pressure control
7. Handle for diff. pressure setting, prepared for sealing
8. Union nut
9. Upper casing of diaphragm
10. Lower casing of diaphragm
11. Impulse tube
12. Compression fitting for impulse tube
13. Actuator

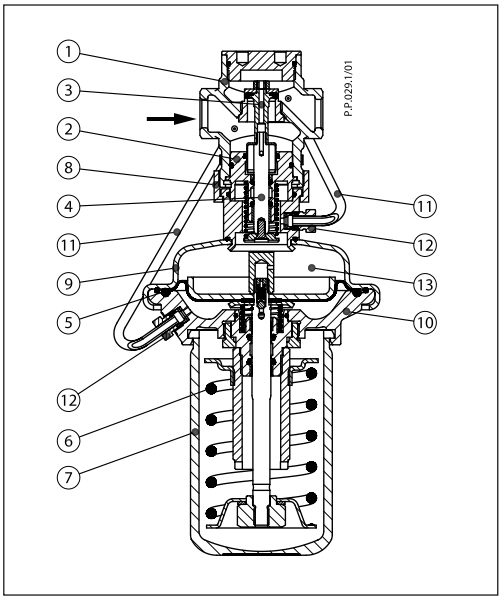



© Danfoss | 2018.02

**Function**

The pressures in front and behind of the control valve are being transferred through the impulse tubes to the actuator chambers and act on control diaphragm. Control valve is normally closed. It opens on rising differential pressure and closes on falling differential pressure to maintain constant differential pressure.

Controller is equipped with excess pressure safety valve, which protects control diaphragm for diff. pressure control from too high differential pressure.

**Settings**

*Differential pressure setting*
Differential pressure setting is being done by the adjustment of the setting spring for differential pressure control. The adjustment can be done by means of spring for differential pressure setting and/or pressure indicators

**Adjustment**

*Relation between scale figures and differential pressure. Values given are approximate.*

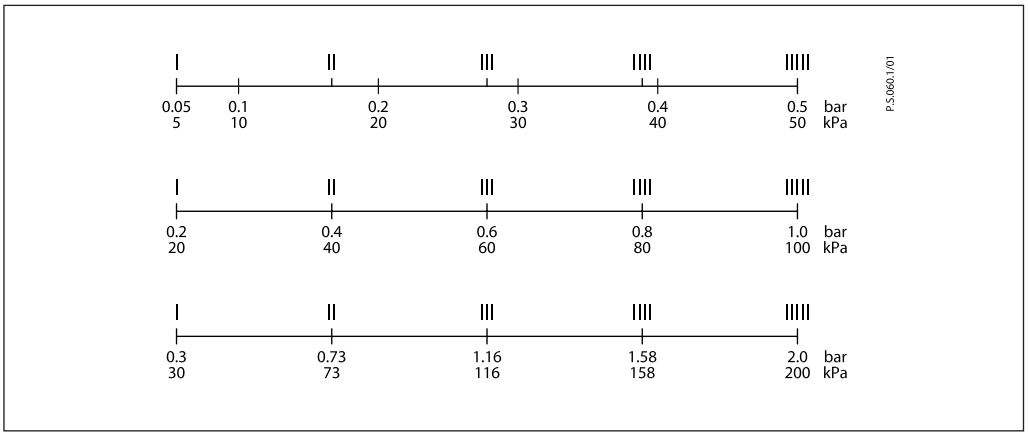

## Dimensions

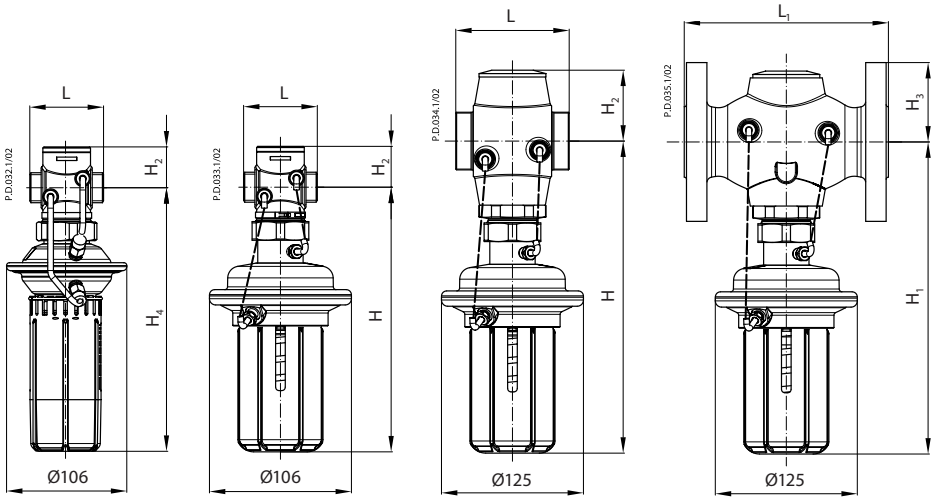


***PN 16***
*DN 15 - 25*

***PN 25***
*DN 15 - 25*

***PN 25***
*DN 32 - 50*

***PN 25***
*DN 32 - 50*

| DN | L | $L_1$ | H | $H_1$ | $H_2$ | $H_3$ | $H_4$ | Weight (kg) | | |
|---|---|---|---|---|---|---|---|---|---|---|
| | mm | | | | | | | PN 16 | PN 25 | |
| | | | | | | | | | thread | flange |
| 15 | 65 | - | 233 | - | 34 | - | 232 | 1.8 | 3.5 | - |
| 20 | 70 | - | 233 | - | 34 | - | 232 | 1.8 | 5.5 | - |
| 25 | 72 | - | 233 | - | 37 | - | 232 | 2.0 | 3.7 | - |
| 32 | 100 | 180 | 275 | 275 | 62 | 70 | - | - | 5.8 | 10.4 |
| 40 | 110 | 200 | 275 | 275 | 62 | 75 | - | - | 5.9 | 11.9 |
| 50 | 130 | 230 | 275 | 275 | 62 | 82 | - | - | 6.6 | 13.9 |

***Note:*** *other flange dimensions - see table for tailpieces*

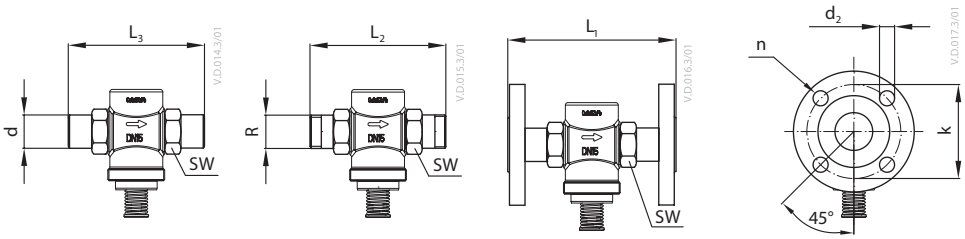


| DN | R [1] | SW | d | $L_1$ [2] | $L_2$ | $L_3$ | k | $d_2$ | n |
|---|---|---|---|---|---|---|---|---|---|
| | | mm | | | | | | | |
| 15 | ½ | 32 (G ¾A) | 21 | 130 | 120 | 139 | 65 | 14 | 4 |
| 20 | ¾ | 41 (G 1A) | 26 | 150 | 131 | 154 | 75 | 14 | 4 |
| 25 | 1 | 50 (G 1¼A) | 33 | 160 | 145 | 159 | 85 | 14 | 4 |
| 32 | 1¼ | 63 (G 1¾A) | 42 | - | 177 | 184 | 100 | 18 | 4 |
| 40 | 1 ½ | 70 (G 2A) | 47 | - | 200 | 204 | 110 | 18 | 4 |
| 50 | 2 | 82 (G 2½A) | 60 | - | 244 | 234 | 125 | 18 | 4 |

*[1] Conical ext. thread acc. to EN 10226-1*
*[2] Flanges PN 25, acc. to EN 1092-2*


© Danfoss | 2018.02

**Data sheet**

# Differential pressure relief controller (PN 16, 25, 40) AFPA / VFG 2(1)

## Description

The controller is a self-acting differential pressure relief controller primarily for use in district heating systems. The controller is normally closed and opens on rising differential pressure.

The controller has a control valve, an actuator with one control diaphragm and spring for differential pressure setting.

Further on two valve versions are available:
- VFG 2 with metallic sealing cone
- VFG 21 with soft sealing cone

**Main data:**
- DN 15-250
- $k_{VS}$ 4.0-400 m³/h
- PN 16, 25, 40
- Setting range:
  – 0.05-0.3 bar / 0.1-0.6 bar / 0.15-1.2 bar / 0.5-2.5 bar / 1-5 bar
- Temperature:
  – Circulation water / glycolic water up to 30 %: 2 … 150/200 °C
- Connections:
  – Flange

## Ordering

*Example 1:*
*Differential pressure relief controller;*
*DN 15; $k_{VS}$ 4.0; PN 16; metallic sealing; setting range 0.15-1.2 bar; $T_{max}$ 150 °C; flange;*

- *1× VFG 2 DN 15 valve*
  *Code no: **065B2388***
- *1× AFPA actuator*
  *Code no: **003G1021***
- *2× Impulse tube set AF*
  *Code no: **003G1391***

*Products will be delivered separatly.*

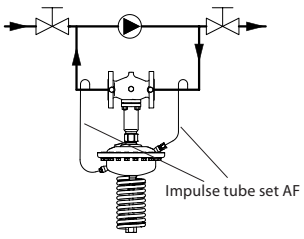


**VFG 2** Valves (metallic sealing cone)

| Picture | DN (mm) | $k_{VS}$ (m³/h) | Connections | $T_{max}$ (°C) | Code No. PN 16 | $T_{max}$ (°C) | Code No. PN 25 | Code No. PN 40 |
|---|---|---|---|---|---|---|---|---|
| 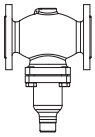 | 15 | 4.0 | Flanges acc. to EN 1092-1 | 150 | **065B2388** | 200 [1] | **065B2401** | **065B2411** |
| | 20 | 6.3 | | | **065B2389** | | **065B2402** | **065B2412** |
| | 25 | 8.0 | | | **065B2390** | | **065B2403** | **065B2413** |
| | 32 | 16 | | | **065B2391** | | **065B2404** | **065B2414** |
| | 40 | 20 | | | **065B2392** | | **065B2405** | **065B2415** |
| | 50 | 32 | | | **065B2393** | | **065B2406** | **065B2416** |
| | 65 | 50 | | | **065B2394** | | **065B2407** | **065B2417** |
| | 80 | 80 | | | **065B2395** | | **065B2408** | **065B2418** |
| | 100 | 125 | | | **065B2396** | | **065B2409** | **065B2419** |
| | 125 | 160 | | | **065B2397** | | **065B2410** | **065B2420** |
| 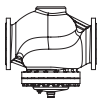 | 150 | 280 | | | **065B2398** | 150 | – | **065B2421** |
| | 200 | 320 | | | **065B2399** | | – | **065B2422** |
| | 250 | 400 | | | **065B2400** | | – | **065B2423** |
| | | | | | | | | |
| 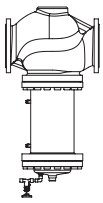 | 150 | 280 | | | – | 200 [1] | – | **On request** |
| | 200 | 320 | | | – | | – | **On request** |
| | 250 | 400 | | | – | | – | **On request** |
| | | | | | | | | |

[1] *at temperatures above 150 °C only with seal pots (see Accessories)*

## Ordering *(continuous)*

*Example 2:*
*Differential pressure relief controller;*
*DN 15; $k_{VS}$ 4.0; PN 25; metallic sealing; setting range 0.15-1.2 bar; $T_{max}$ 200 °C; flange;*

- *1× VFG 2 DN 15 valve*
  *Code no:* ***065B2401***
- *1× AFPA actuator*
  *Code no:* ***003G1021***
- *2× Impulse tube set AF*
  *Code no:* ***003G1391***
- *2× Seal pot V1*
  *Code no:* ***003G1392***

*Products will be delivered separatly.*

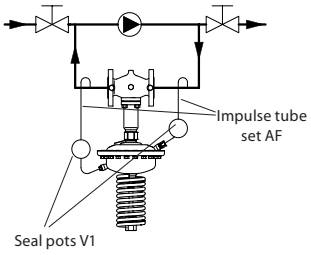


## VFG 21 Valves (soft sealing cone)

| Picture | DN (mm) | $k_{VS}$ ($m^3/h$) | $T_{max}$ (°C) | Connections | Code No. PN 16 |
|---|---|---|---|---|---|
| 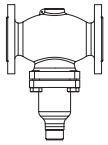 | 15 | 4.0 | 150 | Flanges acc. to EN 1092-1 | **065B2502** |
| | 20 | 6.3 | | | **065B2503** |
| | 25 | 8.0 | | | **065B2504** |
| | 32 | 16 | | | **065B2505** |
| | 40 | 20 | | | **065B2506** |
| | 50 | 32 | | | **065B2507** |
| | 65 | 50 | | | **065B2508** |
| | 80 | 80 | | | **065B2509** |
| | 100 | 125 | | | **065B2510** |
| | 125 | 160 | | | **065B2511** |
| 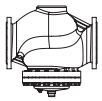 | 150 | 280 | | | **065B2512** |
| | 200 | 320 | | | **065B2513** |
| | 250 | 400 | | | **065B2514** |

***Note:*** *other valves available on special request.*

## AFPA Actuators

| Picture | Δp setting range (bar) | for DN | Code No. |
|---|---|---|---|
| 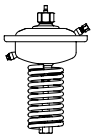 | 1-5 | 15-125 | **003G1019** |
| | 0.5-2.5 | | **003G1020** |
| | 0.15-1.2 | 15-250 | **003G1021** |
| | 0.1-0.6 | | **003G1022** |
| | 0.05-0.3 | | **003G1023** |

## Accessories

| Picture | Type designation | Description | Connections | Code No. |
|---|---|---|---|---|
| | Impulse tube set AF | – 1× Copper tube Ø10 × 1 × 1500 mm<br>– 1 × compression fitting for imp. tube connection to pipe (G ¼)<br>– 2 × socket | – | **003G1391** |
| 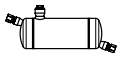 | Seal pot V1 [1] | Capacity 1 liter; with compression fittings for imp. tube Ø10 | – | **003G1392** |
| | Seal pot V2 [1] | Capacity 3 liter; with compression fittings for imp. tube Ø10, for actuator size 630 $cm^2$ | – | **003G1403** |
| | Compression fitting [2] | For impulse tube Ø10 connections to controller | G ¼ | **003G1468** |
| | Shut off valve | For impulse tube Ø10 | – | **003G1401** |
| | Throttle valve | | | **065B2909** |

[1] *Seal pot has to be used on impulse tubes always when $T_{max} \geq 150$ °C*
[2] *Consist of a nipple, compression ring and nut*

## Ordering *(continuous)*

### Service kits

| Picture | Type designation | DN (mm) | $k_{vs}$ ($m^3/h$) | Code No. for VFG 2 | Code No. for VFG 21 |
|---|---|---|---|---|---|
| | Valve insert | 15 | 4.0 | **065B2796** | **065B2790** |
| | | 20 | 6.3 | **065B2797** | **065B2791** |
| | | 25 | 8 | **065B2798** | **065B2792** |
| | | 32 | 16 | | |
| | | 40 | 20 | **065B2799** | **065B2793** |
| | | 50 | 32 | | |
| | | 65 | 50 | **065B2800** | **065B2794** |
| | | 80 | 80 | | |
| | | 100 | 125 | **065B2801** | **065B2795** |
| | | 125 | 160 | | |
| | | 150 | 280 | **065B2964** | **065B2966** |
| | | 250 | 400 | **065B2965** | – |
| | Stuffing cone (with EPDM O-rings) | | | **003G1464** | |

## Technical data

### Valve

| **Nominal diameter** | | **DN** | **15** | **20** | **25** | **32** | **40** | **50** | **65** | **80** | **100** | **125** | **150** | **200** | **250** |
|---|---|---|---|---|---|---|---|---|---|---|---|---|---|---|---|
| $k_{vs}$ value | | $m^3/h$ | 4.0 | 6.3 | 8.0 | 16 | 20 | 32 | 50 | 80 | 125 | 160 | 280 | 320 | 400 |
| Cavitation factor z | | | 0.6 | 0.6 | 0.6 | 0.55 | 0.55 | 0.5 | 0.5 | 0.45 | 0.4 | 0.35 | 0.3 | 0.2 | 0.2 |
| Leakage acc. to standard IEC 534 (% of $k_{vs}$) | VFG 2 | | ≤ 0.03 | | | | | | | | | | ≤ 0.05 | | |
| | VFG 21 | | ≤ 0.01 | | | | | | | | | | | | |
| Nominal pressure | | PN | 16, 25, 40 | | | | | | | | | | | | |
| Max. differential pressure | PN 16 | bar | 16 | | | | | | | | 15 | | 12 | 10 | |
| | PN 25, 40 | | 20 | | | | | | | | | | | | |
| Media | | | Circulation water / glycolic water up to 30 % | | | | | | | | | | | | |
| Media pH | | | Min. 7, max. 10 | | | | | | | | | | | | |
| Media temperature | VFG 2 | °C | 2 … 150 / 2 … 200 [1] | | | | | | | | | | 2 … 150 (200 [2]) | | |
| | VFG 21 | | 2 … 150 | | | | | | | | | | | | |
| Connections | | | Flange | | | | | | | | | | | | |
| **Materials** | | | | | | | | | | | | | | | |
| Valve body | PN 16 | | Grey cast iron EN-GJL-250 (GG-25) | | | | | | | | | | | | |
| | PN 25 | | Ductile iron EN-GJS-400(GGG-40.3) | | | | | | | | | | | | |
| | PN 40 | | Cast steel GP240GH (GS-C 25) | | | | | | | | | | | | |
| Valve seat | | | Stainless steel, mat. No. 1.4021 | | | | | | | | | | Stainless steel, mat. No. 1.4313 | | |
| Valve cone | | | Stainless steel, mat. No. 1.4404 | | | | | | | | | | Stainless steel, mat. No. 1.4021 | | |
| Sealing | VFG 2 | | Metal | | | | | | | | | | | | |
| | VFG 21 | | EPDM | | | | | | | | | | | | |
| Pressure relieve system | | | Bellows (Stainless steel, mat. No. 1.4571) | | | | | | | | | | Diaphragm (EPDM) | | |

[1] *at temperatures above 150 °C only with seal pots (see Accessories)*
[2] *on request*

### Actuator

| **Type** | | **AFPA** | | | | |
|---|---|---|---|---|---|---|
| Actuator size | $cm^2$ | 80 | | 250 | | 630 |
| Max. operating pressure | bar | 25 | | 25 | | 16 |
| Diff. pressure setting ranges and spring colours | bar | silver | yellow | silver | yellow | yellow |
| | | 1-5 | 0.5-2.5 | 0.15-1.2 | 0.1-0.6 | 0.05-0.3 |
| **Materials** | | | | | | |
| Actuator housing | | Steel, mat. No. 1.0338, zinc plated | | | | |
| Control diaphragm | | EPDM (Rolling; fibre enforced) | | | | |

## Application principles

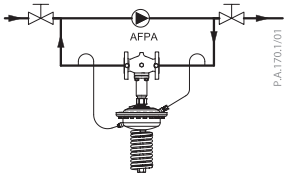


*Differential pressure control for a pump in bypass*

## Installation position

DN 15-80 $T_{max}$ ≤ 120 °C

The controllers can be installed in any position.

DN 15-80 $T_{max}$ > 120 °C; DN 100-250

The controllers can be installed in horizontal pipes only, with a pressure actuator oriented downwards.

DN 15-80 $T_{max}$ ≤ 120 °C

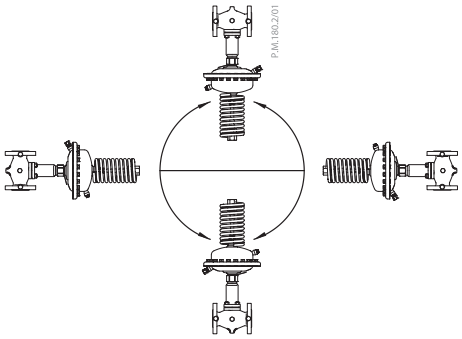


DN 15-80 $T_{max}$ > 120 °C; DN 100-250

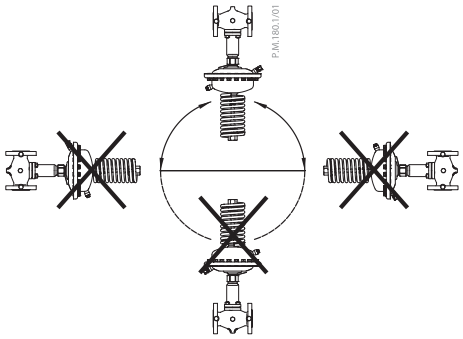

**Pressure temperature diagram**

*Working area is below P-T line and it ends at $T_{max}$ for each valve*

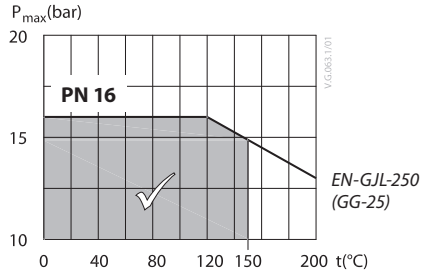


*Maximum allowed operating pressure as a function of media temperature (according to EN 1092-2)*

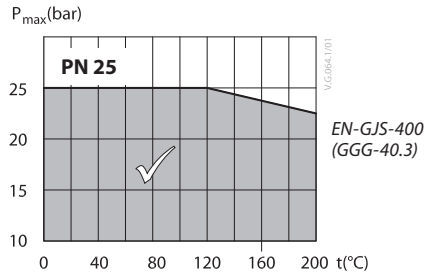


*Maximum allowed operating pressure as a function of media temperature (according to EN 1092-2)*

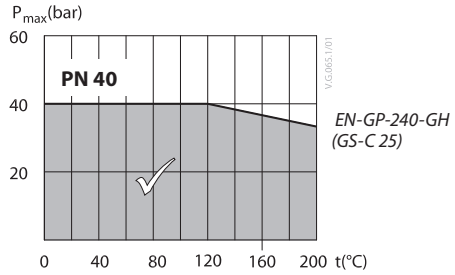


*Maximum allowed operating pressure as a function of media temperature (according to EN 1092-1)*

**Sizing**

Given data:
$Q_{max}$ = 4.5 m³/h
$\Delta p_{AFPA}$ =1.4 bar
Nominal pressure PN 16

$k_v$ value is calculated according to formula:

$$k_v = \frac{Q_{max}}{\sqrt{\Delta p_{AFPA}}} = \frac{4,5}{\sqrt{1,4}}$$

$k_v$ = 3.8 m³/h

Solution:
The example selects AFPA VFG 2 PN 16 DN 15, $k_{VS}$ value 4.0 with differential pressure setting range 0.5-2.5 bar.

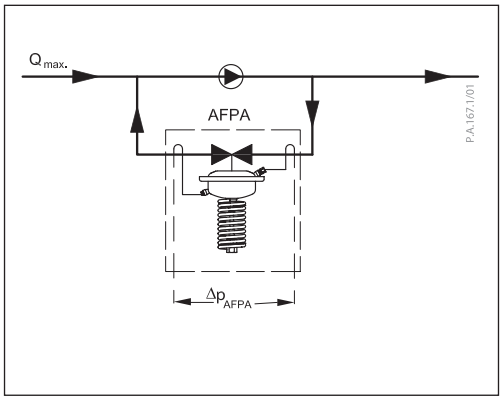

## Design

1. Valve body
2. Cover
3. Valve seat
4. Valve insert
5. Pressure relieved valve cone
6. Valve stem
7. Bellows for pressure relief of valve cone
8. Actuator
9. Diaphragm for pressure relief of valve cone
10. Control diaphragm for differential pressure control
11. Setting spring for diff. pressure control
12. Adjuster for diff. pressure setting, prepared for sealing
13. Stuffing cone
14. Union nut
15. Compression fitting for impulse tube
16. Upper casing of diaphragm
17. Lower casing of diaphragm
18. Valve body extension
19. Shut off valve for water filling
20. Closing plug

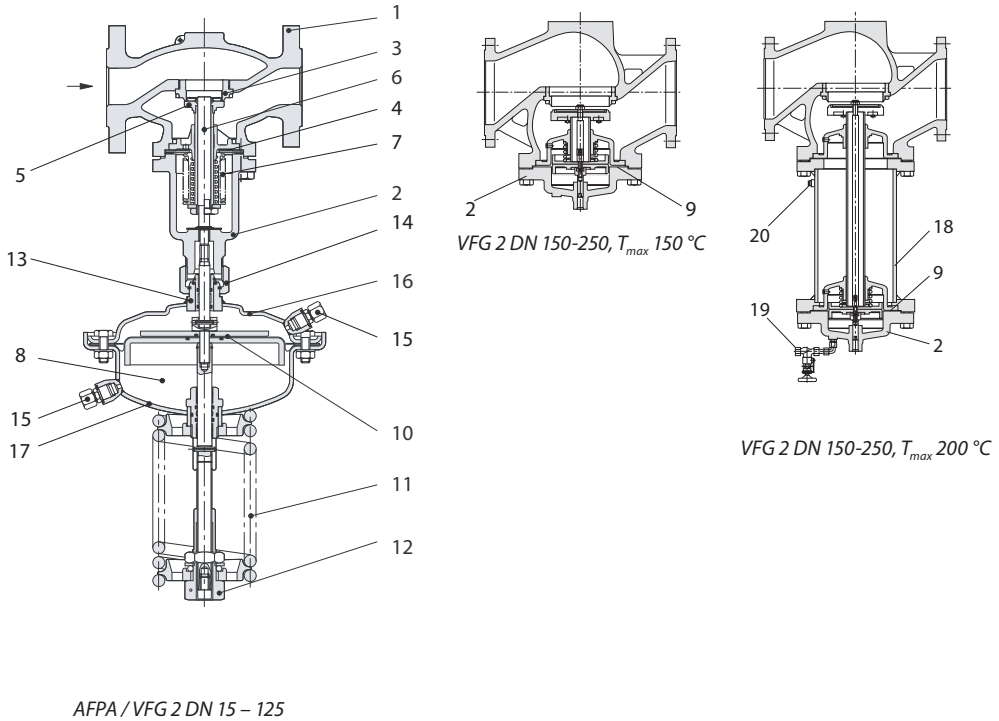


*AFPA / VFG 2 DN 15 – 125*

*VFG 2 DN 150-250, $T_{max}$ 150 °C*

*VFG 2 DN 150-250, $T_{max}$ 200 °C*

## Function

The pressures in front and behind of the control valve are being transferred through the impulse tubes to the actuator chambers and act on control diaphragm for diff. pressure control.
The controller became normally closed after commissioning (stretching the spring). It opens on rising differential pressure and closes on falling differential pressure to maintain constant differential pressure.

## Settings

*Differential pressure setting*
Differential pressure setting is being done by the adjustment of the setting spring for differential pressure control. The adjustment can be done by means of spring for differential pressure setting and pressure indicators.

## Dimensions

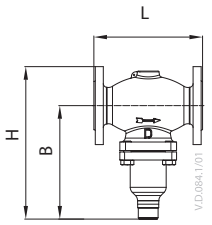


*VFG DN 15-125*

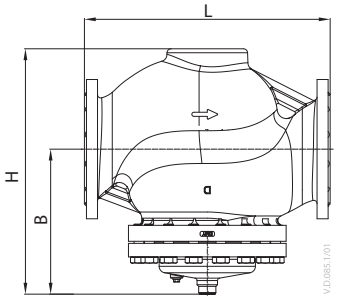


*VFG DN 150-250*

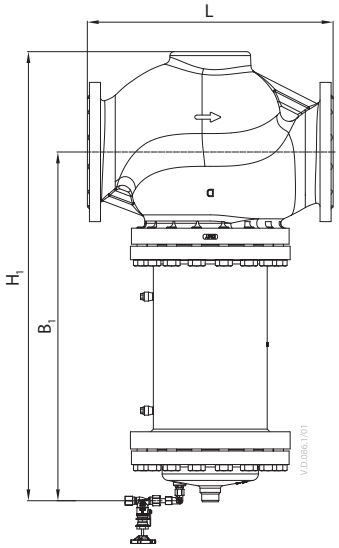


*VFG DN 150-250*
*with valve body extension up to 200 °C*

**VFG 2, VFG 21** Valves

| DN | | | 15 | 20 | 25 | 32 | 40 | 50 | 65 | 80 | 100 | 125 | 150 | 200 | 250 |
|---|---|---|---|---|---|---|---|---|---|---|---|---|---|---|---|
| L | | mm | 130 | 150 | 160 | 180 | 200 | 230 | 290 | 310 | 350 | 400 | 480 | 600 | 730 |
| B | | mm | 213 | 213 | 239 | 239 | 241 | 241 | 276 | 276 | 381 | 381 | 326 | 354 | 401 |
| H | | mm | 267 | 267 | 304 | 304 | 323 | 323 | 370 | 370 | 505 | 505 | 505 | 591 | 661 |
| Weight | PN 16 / 25 | kg | 7.5 | 8.5 | 10 | 12 | 15 | 18 | 27.5 | 30 | 58 | 68 | 115 | 185 | 323 |
| | PN 40 | kg | | | | | | | 30 | 32.5 | 60.5 | 69 | 141 | 253 | 333 |
| $B_1$ | | mm | | | | | | | | | | | 620 | 852 | 1199 |
| $H_1$ | | mm | | | | | | | | | | | 799 | 1089 | 1459 |
| Weight (valve with body extension) | PN 16 / 25 | kg | | | | | | | | | | | 154 | 301 | 469 |
| | PN 40 | kg | | | | | | | | | | | 179 | 336 | 505 |

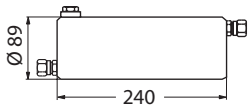


*Seal pot V1*

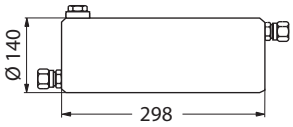


*Seal pot V2*

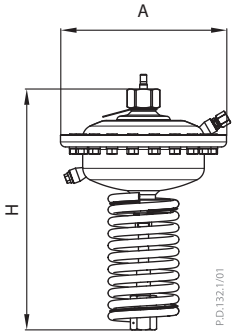


**AFPA** Actuator

| Actuator size | cm² | 80 | 250 | 630 |
|---|---|---|---|---|
| A | mm | 172 | 263 | 380 |
| H | mm | 430 | 470 | 520 |
| Weight | kg | 7.5 | 13 | 28 |

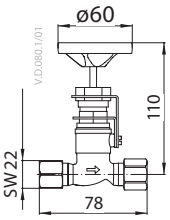


*Shut off valve*

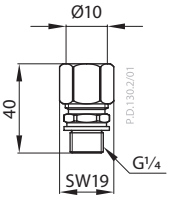


*Compression fitting*

ENGINEERING
**TOMORROW**

**Data sheet**

# Pressure relief controller AVA (PN 25)

## Description

AVA is a self-acting pressure relief controller primarily for use in district heating systems. The controller is normally closed and opens on rising pressure.

The controller has a control valve, an actuator with one control diaphragm and a spring(s) for pressure setting.

**Main data:**
- DN 15-50
- $k_{VS}$ 4.0-25 $m^3/h$
- PN 25
- Setting range:
  1.0-4.5 bar / 3.0-11 bar
- Temperature:
  - Circulation water / glycolic water up to 30 %: 2 … 150 °C
- Connections:
  - Ext. thread (weld-on, thread and flange tailpieces)
  - Flange

## Ordering

*Example:*
*Pressure relief controller; DN 15; $k_{VS}$ 4.0; PN 25; setting range 1.0-4.5 bar; $T_{max}$ 150 °C; ext. thread*

*- AVA DN 15 controller*
*Code No:* ***003H6614***

*Option:*
*- Weld-on tailpieces*
*Code No:* ***003H6908***

*The controller will be delivered completely assembled, inclusive impulse tubes between valve and actuator.*

**AVA** Controller

| Picture | DN (mm) | $k_{VS}$ ($m^3/h$) | Connection | | Pressure setting range (bar) | Code No. | Pressure setting range (bar) | Code No. |
|---|---|---|---|---|---|---|---|---|
| | 15 | 4.0 | Cylindr. ext. thread acc. to ISO 228/1 | G ¾ A | 1.0-4.5 | **003H6614** | 3-11 | **003H6620** |
| | 20 | 6.3 | | G 1 A | | **003H6615** | | **003H6621** |
| | 25 | 8.0 | | G 1¼ A | | **003H6616** | | **003H6622** |
| | | | | | | | | |
| | 32 | 12.5 | Flanges PN 25, acc. to EN 1092-2 | | | **003H6626** | | **003H6629** |
| | 40 | 20 | | | | **003H6627** | | **003H6630** |
| | 50 | 25 | | | | **003H6628** | | **003H6631** |
| | | | | | | | | |

***Note:*** *other controllers available on special request.*

### Accessories

| Picture | Type designation | DN | Connection | | Code No. |
|---|---|---|---|---|---|
| 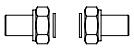 | Weld-on tailpieces | 15 | - | | **003H6908** |
| | | 20 | | | **003H6909** |
| | | 25 | | | **003H6910** |
| | External thread tailpieces | 15 | Conical ext. thread acc. to EN 10226-1 | R ½ | **003H6902** |
| | | 20 | | R ¾ | **003H6903** |
| | | 25 | | R 1 | **003H6904** |
| 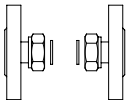 | Flange tailpieces | 15 | Flanges PN 25, acc. to EN 1092-2 | | **003H6915** |
| | | 20 | | | **003H6916** |
| | | 25 | | | **003H6917** |
| | | | | | |

## Ordering *(continuous)*

### Service kits

| Picture | Type designation | Pressure setting range (bar) | Code No. |
|---|---|---|---|
| | Actuator with setting spring | 1.0-4.5 | **003H6844** |
| | | 3-11 | **003H6845** |

## Technical data

### Valve

| **Nominal diameter** | | **DN** | **15** | **20** | **25** | **32** | **40** | **50** |
|---|---|---|---|---|---|---|---|---|
| $k_{VS}$ value | | $m^3/h$ | 4.0 | 6.3 | 8.0 | 12.5 | 20 | 25 |
| Cavitation factor z | | | ≥ 0.6 | | ≥ 0.55 | | ≥ 0.5 | |
| Leakage acc. to standard IEC 534 | | % of $k_{VS}$ | ≤ 0.02 | | | ≤ 0.05 | | |
| Nominal pressure | | PN | 25 | | | | | |
| Max. differential pressure | | bar | 20 | | | 16 | | |
| Medium | | | Circulation water / glycolic water up to 30 % | | | | | |
| Medium pH | | | Min. 7, max. 10 | | | | | |
| Medium temperature | | ˚C | 2 …150 | | | | | |
| Connections | valve | | External thread | | | Flange | | |
| | tailpieces | | Weld-on, external thread and flange | | | - | | |
| **Materials** | | | | | | | | |
| Valve body | thread | | Red bronze CuSn5ZnPb (Rg5) | | | - | | |
| | flange | | - | | | Ductile iron EN-GJS-400-18-LT (GGG 40.3) | | |
| Valve seat | | | Stainless steel, mat. No. 1.4571 | | | | | |
| Valve cone | | | Dezincing free brass CuZn36Pb2As | | | | | |
| Sealing | | | EPDM | | | | | |
| Pressure relieve system | | | Piston | | | | | |

### Actuator

| **Type** | | | **AVA** | |
|---|---|---|---|---|
| Actuator size | | cm2 | 54 | |
| Nominal pressure | | PN | 25 | |
| Pressure setting ranges and spring colours | | bar | 1.0-4.5 | 3-11 |
| | | | blue | black, green |
| **Materials** | | | | |
| Actuator housing | Upper casing of diaphragm | | Stainless steel, mat. No.1.4301 | |
| | Lower casing of diaphragm | | Dezincing free brass CuZn36Pb2As | |
| Diaphragm | | | EPDM | |
| Impulse tube | | | Copper tube Ø6 × 1 mm | |


© Danfoss | 2020.03

## Application principles

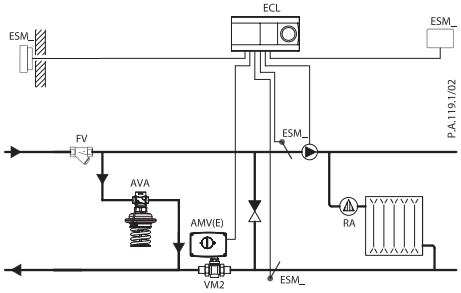


*Direct-connected heating system*

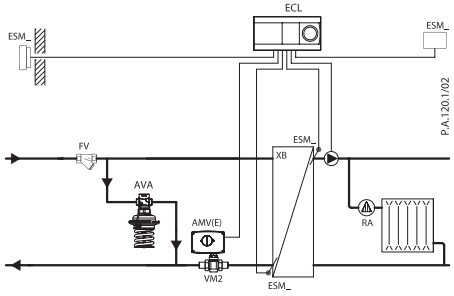


*Indirectly connected heating system*

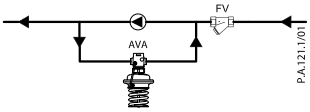


*Pressure control for a pump in bypass*

## Installation positions

Up to medium temperature of 100 °C the controllers can be installed in any position.

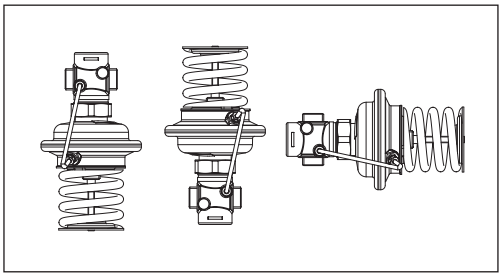

For higher temperatures the controllers have to be installed in horizontal pipes only, with a pressure actuator oriented downwards.

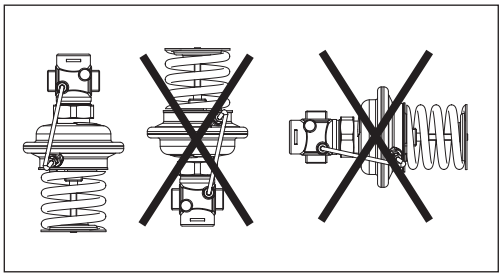

## Pressure temperature diagram

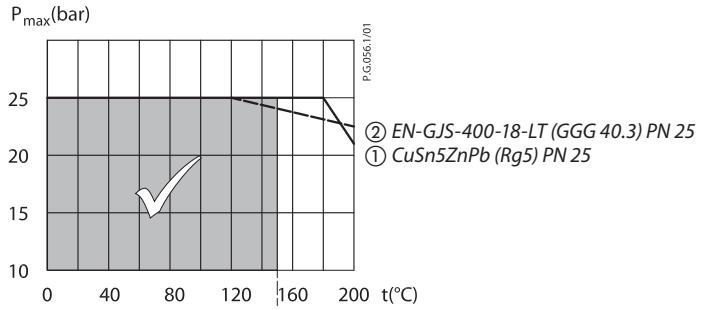


*Maximum allowed operating pressure as a function of medium temperature (according to EN 1092-2 and EN 1092-3).*

## Sizing

*Given data:*
$Q_{max}$ = 1.9 m³/h
$\Delta p_{min}$ = 1.3 bar

Nominal pressure PN 25

$k_v$ value is calculated according to formula:

$$k_v = \frac{Q_{max}}{\sqrt{\Delta p_{min}}} = \frac{1,9}{\sqrt{1,3}}$$

$k_v$ = 1.7 m³/h

*Solution:*
The example selects AVA DN 15, $k_{vs}$ value 4.0,
with pressure setting range 1.0-4.5 bar.

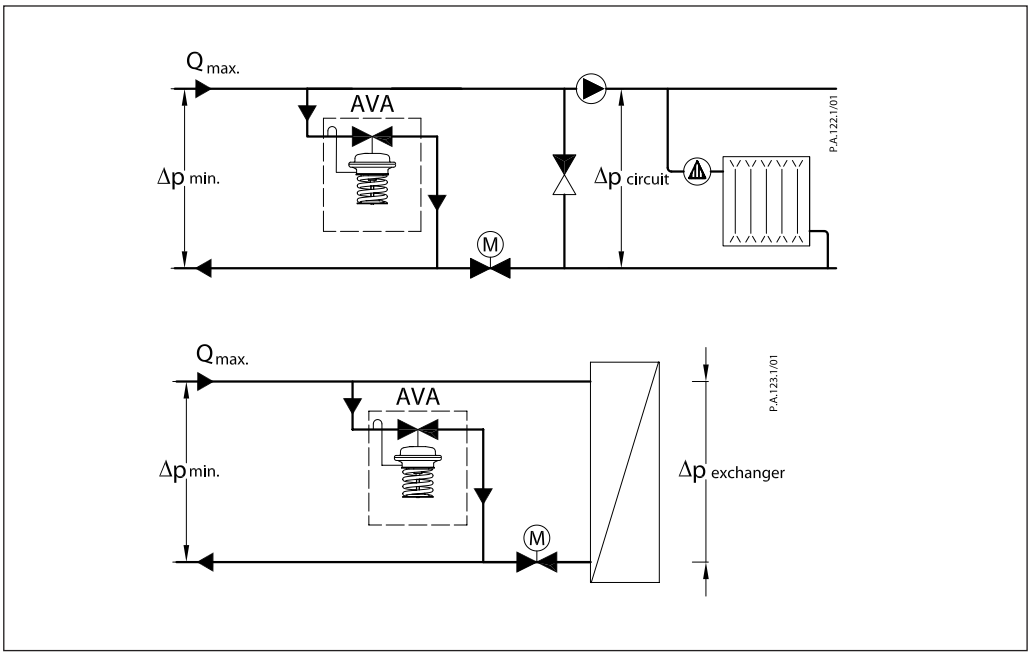



© Danfoss | 2020.03

## Design

1. Valve body
2. Valve insert
3. Pressure relieved valve cone
4. Valve stem
5. Control diaphragm
6. Setting spring for pressure control
7. Adjuster for pressure setting, prepared for sealing
8. Union nut
9. Upper casing of diaphragm
10. Lower casing of diaphragm
11. Air space bore
12. Impulse tube
13. Compression fitting for impulse tube
14. Actuator

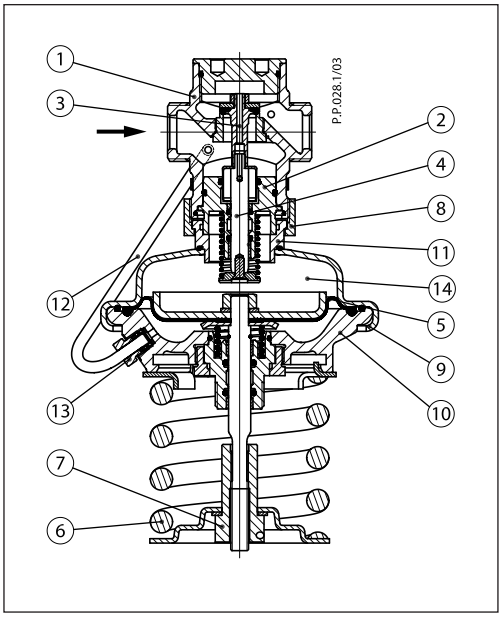


## Function

The pressure in front of the control valve is being transferred through the impulse tube to the actuator chamber and act on control diaphragm. On the other side of the diaphragm atmospheric pressure is acting (through air space bore). Control valve is normally closed. It opens on rising pressure and closes on falling pressure to maintain constant pressure.

## Settings

*Pressure setting*
Pressure setting is being done by the adjustment of the setting spring for pressure control. The adjustment can be done by means of spring for pressure setting and/or pressure indicators.

## Dimensions

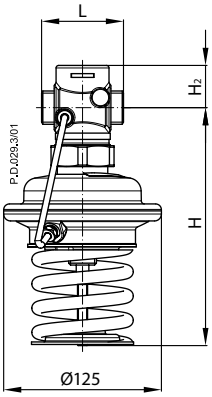


*DN 15-25*
*Δp = 1.0-4.5 bar*

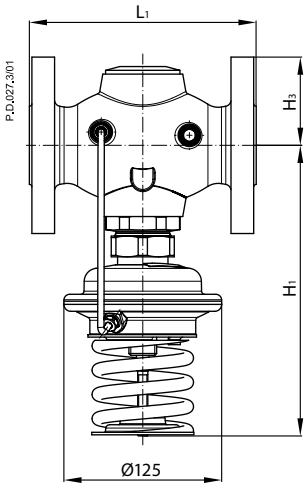


*DN 32-50*
*Δp = 1.0-4.5 bar*

| DN | L | $L_1$ | H | $H_1$ | $H_2$ | $H_3$ | Weight (kg) |
|---|---|---|---|---|---|---|---|
| | mm | | | | | | |
| 15 | 65 | | 215 | | 34 | | 3.5 |
| 20 | 70 | - | 215 | - | 34 | - | 3.5 |
| 25 | 75 | | 215 | | 37 | | 3.7 |
| 32 | | 180 | | 250 | | 70 | 10.4 |
| 40 | - | 200 | - | 250 | - | 75 | 12.0 |
| 50 | | 230 | | 250 | | 82 | 13.9 |

***Note:*** *Other flange dimensions - see table for tailpieces.*

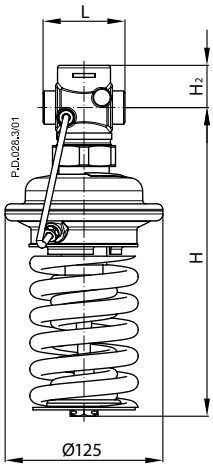


*DN 15-25*
*Δp = 3.0-11 bar*

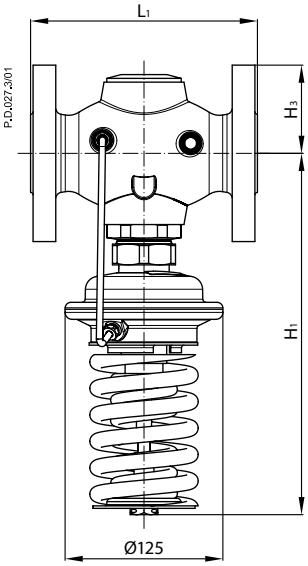


*DN 32-50*
*Δp = 3.0-11 bar*

| DN | L | $L_1$ | H | $H_1$ | $H_2$ | $H_3$ | Weight (kg) |
|---|---|---|---|---|---|---|---|
| | mm | | | | | | |
| 15 | 65 | | 275 | | 34 | | 3.7 |
| 20 | 70 | - | 275 | - | 34 | - | 3.7 |
| 25 | 75 | | 275 | | 37 | | 3.9 |
| 32 | | 180 | | 320 | | 70 | 10.5 |
| 40 | - | 200 | - | 320 | - | 75 | 12.1 |
| 50 | | 230 | | 320 | | 82 | 14.0 |

***Note:*** *Other flange dimensions - see table for tailpieces.*

 © Danfoss | 2020.03

**Dimensions** *(continuous)*

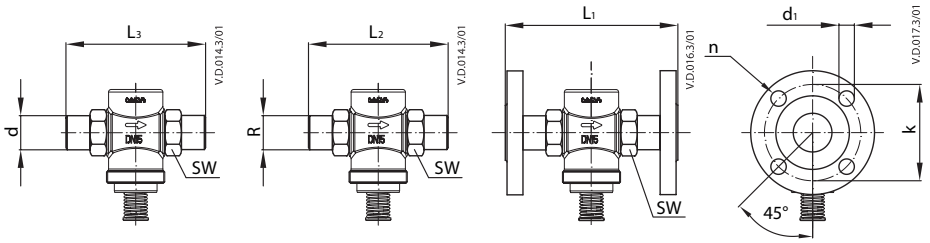


| DN | R [1] | SW | d | $L_1$ [2] | $L_2$ | $L_3$ | k | $d_2$ | n |
|---|---|---|---|---|---|---|---|---|---|
| | | mm | | | | | | | |
| 15 | ½ | 32 (G ¾A) | 21 | 130 | 131 | 139 | 65 | 14 | 4 |
| 20 | ¾ | 41 (G 1A) | 26 | 150 | 144 | 154 | 75 | 14 | 4 |
| 25 | 1 | 50 (G 1¼A) | 33 | 160 | 160 | 159 | 85 | 14 | 4 |
| 32 | | | | | | | 100 | 18 | 4 |
| 40 | | | | | | | 110 | 18 | 4 |
| 50 | | | | | | | 125 | 18 | 4 |

[1] *Conical ext. thread acc. to EN 10226-1*
[2] *Flanges PN 25, acc. to EN 1092-2*

## Data sheet

# Temperature controller AVTB (PN 16)

### Description

AVTB is self-acting temperature controller used to control the water temperature in hot water tanks, heat exchangers, oil preheaters, etc. Controller closes on rising temperature.

The controller has a control valve, thermostatic actuator and handle for temperature setting. Thermostatic actuator consist of a bellows, capillary tube and sensor.

**Main data:**

- DN 15, 20, 25
- $k_{VS}$ 1.9, 3.4, 5.5 $m^3/h$
- PN 16
- Setting range: 0…30 °C / 20…60 °C / 30…100 °C
- Temperature:
  - Circulation water / glycolic water up to 30%: -25 … +130 °C
- Connections:
  - Int. thread
  - Ext. thread (weld-on and ext. thread tailpieces)
- Flow or return mounting, depending on sensor type.

### Ordering

**AVTB** Controller

| Picture | DN | Setting range (°C) | $k_{VS}$ ($m^3/h$) | Max. sensor temp. (°C) | Internal thread | | External thread | |
|---|---|---|---|---|---|---|---|---|
| | | | | | Connection ISO 7/1 | Code No.[1] | Connection ISO 228/1 | Code No.[1] |
| 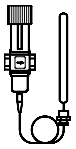 | 15 | 0 … 30 | 1.9 | 55 | $R_p$ ½ | **003N2232**[4] | G ¾ A | **003N5101**[4] |
| | | 20 … 60 | | 90 | | **003N8229**[2] | | **003N5114**[2] |
| | | 30 … 100 | | 130 | | **003N8141**[3] | | **003N5141**[3] |
| | 20 | 0 … 30 | 3.4 | 55 | $R_p$ ¾ | **003N3232**[4] | G 1 A | **003N5102**[4] |
| | | 20 … 60 | | 90 | | **003N8230**[2] | | **003N5115**[2] |
| | | 30 … 100 | | 130 | | **003N8142**[3] | | **003N5142**[3] |
| | 25 | 0 … 30 | 5.5 | 55 | $R_p$ 1 | **003N4232**[4] | G 1¼ A | **003N5103**[4] |
| | | 20 … 60 | | 90 | | **003N8253**[2] | | **003N5116**[2] |
| | | 30 … 100 | | 130 | | **003N8143**[3] | | **003N5143**[3] |

Capillary tube length: 2 m.

[1] *Complete controller including sensor stuffing box. The immersion pocket is an accessory.*
[2] *Including small sensor Ø 9.5 × 180. The sensor is to be mounted where the system temperature is warmer than the temperature in the valve housing. Insulaton disk is factory mounted on the controller.*
[3] *Including small sensor Ø 9.5 × 150. Capillary tube length 2.3 m.*
[4] *Including sensor Ø 18 × 210; available on request*

*Example:*
*Temperature controller, DN 15, $k_{VS}$ 1.9, PN 16, setting range 30 … 100 °C, $t_{max}$ 130 °C, ext. thread*

- *1× AVTB DN 15 Controller*
  *Code No:* ***003N5141***

*Option:*
- *1× Imm. pocket, brass*
  *Code No:* ***013U0290***
- *1× Weld-on taipieces*
  *Code No:* ***003H6908***

### Accessories

| Picture | Type designations | DN | Connection | | Code No. |
|---|---|---|---|---|---|
| | Weld-on taipieces | 15 | - | | **003H6908** |
| | | 20 | | | **003H6909** |
| | | 25 | | | **003H6910** |
| | External thread taipieces | 15 | Con. ext. thread acc. to EN 10226-1 | R ½" | **003H6902** |
| | | 20 | | R ¾" | **003H6903** |
| | | 25 | | R 1" | **003H6904** |
| | Immersion pocket | $R_p$ ½ × M14 × 1 mm, brass 182 mm, without sens.stuff. box | | | **013U0290** |
| | | $R_p$ ½ × M18 × 1,5 mm, st. steel 182 mm, with sens.stuff. box | | | **003N0196** |
| | | $R_p$ ¾ × M22 × 1 mm, brass 220 mm, with sens.stuff. box | | | **003N0050** |
| | | $R_p$ ¾ × M22 × 1 mm, st. steel 220 mm, with sens.stuff. box | | | **003N0192** |
| | Insulation disk [1] | | | | **003N4022** |

[1] *For details see "Installation positions" section*

## Ordering *(continuous)*

### Service kits

| Picture | Type designation | for | Code No. |
|---|---|---|---|
| | *Repair set*<br>Two diaphragms, two O-rings, one rubber cone, one tube of grease and eight valve cover screws | DN 15 | **003N4006** |
| | | DN 20 | **003N4007** |
| | | DN 25 | **003N4008** |
| | Thermostatic actuator 0 … 30 °C, sensor Ø 18 × 210, 2m | | **003N0075** |
| | Thermostatic actuator 20 … 60 °C, sensor Ø 9.5 × 180, 2m | | **003N0130** |
| | Thermostatic actuator 30 … 100 °C, sensor Ø 9.5 × 150, 2.3m | | **003N0131** |
| | Housing of sensor stuffing box, R ½ × M14 × 1 mm, rubber EPDM Ø 12.6 × 4 × 6 mm | | **013U8102** [1] |

[1] *For thermostatic actuators 20 ... 60°C and 30 ... 100°C; code includes housing and gasket of sensor stuffing box*

## Technical data

| **Nominal diameter** | DN | **15** | **20** | **25** |
|---|---|---|---|---|
| $k_{VS}$ value | m³/h | 1.9 | 3.4 | 5.5 |
| Cavitation factor z | | 0.4 | | |
| Nominal pressure | PN | 16 | | |
| Max. differential pressure | bar | 10 | | |
| Medium | | Circulation water / glycolic water up to 30% | | |
| Medium pH | | Min. 7, max. 10 | | |
| Medium temperature | °C | -25 … +130 | | |
| Connections | valve | Internal and external thread | | |
| | tailpieces | Weld-on and external thread | | |
| **Materials** | | | | |
| Valve body | internal thread | MS 58, hot-pressed, DIN 17660, W.No. 2.0402, CuZn40Pb2 | | |
| | external thread | Dezincing-free brass, BS 2872/CZ132 | | |
| Valve seat | | Cr Ni steel, DIN 17440, W.No. 1.4301 | | |
| Valve cone | | NBR-rubber | | |
| Spindle | | Dezincing-free brass, BS 2872/CZ132 | | |
| Other metal parts | | Dezincing-free brass, BS 2874/CZ132 | | |
| Diaphragms, O-rings | | EPDM-rubber | | |
| Temperature sensor | | Copper | | |
| Sensor charge | | 0 … 30 °C | R 152 A, C2H4F2 | |
| | | 20 … 60 °C | Butane R600, C4H10 | |
| | | 30 … 100 °C | Carbon dioxide, CO2 | |

## Application principle

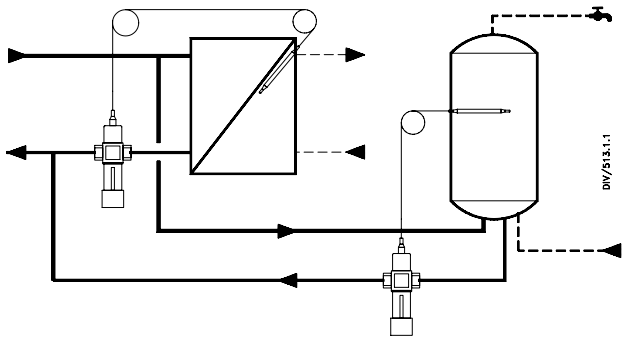


*Slow control system, setting range 30 …100 °C*
*Fast control system, setting range 0 … 30 °C/20 … 60 °C*

## Installation positions

*Temperature controller*
The controller can be installed in any position, with flow in the direction of the cast-in arrow.

AVTB 20 … 60 must always be installed in the return line (sensor warmer than valve).

If AVTB 20 … 60 has been installed in the return line from a service water heat exchanger (where for certain periods the return temperature approaches the sensor temperature) the installation of insulation disk is recommended (**003N4022**). **Insulation disk is factory mounted on the product.**

AVTB 0 … 30 and 30 …100 can be installed either in flow or in return line.

With AVTB 30 … 100, if temperature variations of more than 20 °C occur at the valve, insulation disk (**003N4022**) must be installed between thermostatic actuator and valve body.

*Temperature sensor*

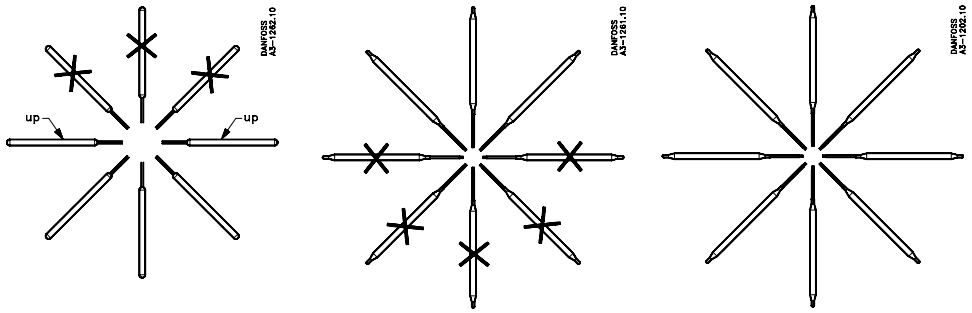


Sensor Ø 18 × 210 mm [2] (AVTB 0 … 30 °C)

Sensor Ø 9.5 × 180 mm [1] (AVTB 20 … 60 °C)

Sensor Ø 9.5 × 150 mm [2] (AVTB 30 … 100 °C)

[1] *The sensor is to be mounted where the system temperature is warmer than the temperature in the valve body*
[2] *The sensor can be mounted where the system temperature is either warmer or colder than the temperature in the valve body*

## Sizing

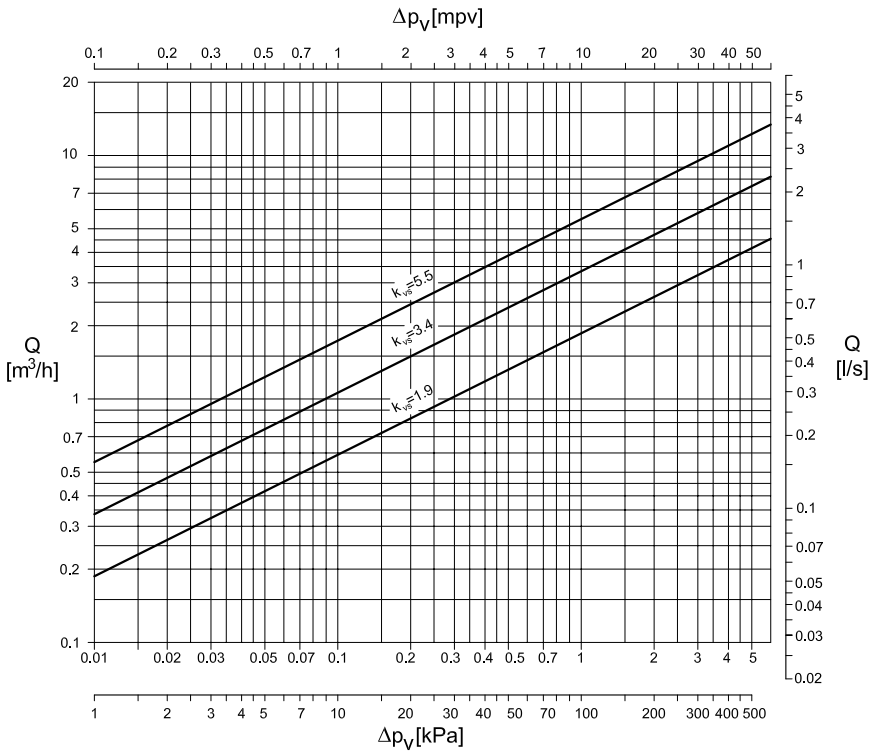

**Sizing** *(continuous)*

***Example***
Hot water temperature control in hot water tanks.

| | |
|---|---|
| Primary medium: | Water |
| *Given:* | |
| Load: | 31 kW (26500 kcal/h) |
| Primary temperature drop Δt: | 20 K |
| Differential pressure Δp across the valve: | 1.7 bar |
| Max. hot water temperature: | 55 °C |
| Water volume Q: | $\frac{31 \times 0.86}{20} = 1.3\,m^3/h$ |

*Required:*
The correct valve size

$$k_v = \frac{Q}{\sqrt{\Delta p}} = \frac{1.3}{\sqrt{1.7}} = 1.0\,m^3/h$$

*Temperature range and P-band*
Calculated $k_v$ value is 1 m³/h.
From this value on the $k_V$ scale in the AVTB diagram, take a line horizontally to intersect the columns for recommended sizing range. Select the smallest possible valve, here an AVTB 15. A temperature range of 30 …100 °C can be assumed as suitable for this example.
The P-band ($X_P$) and final temperature range can also be read from the AVTB diagram. The required closing temperature can be read from the scale for the valve selected. However, there are two temperature ranges that meet the requirement for a closing temperature of 55 °C. $X_P$ is 9 K for the range 30 …100 °C, which means that the controller will yield the calculated capacity at a sensor temperature of 55 °C minus 9 K = 46 °C. For the range 20 … 60 °C $X_P$ = 4 K. This means that the controller will yield the calculated capacity at 55 °C minus 4 K = 51 °C.

To ensure the most stable control an AVTB 15 with a range 30 … 100 °C should be chosen. The water in the hot water tank will reach the closing temperature (55 °C) only when there has been no hot water demand for some time.

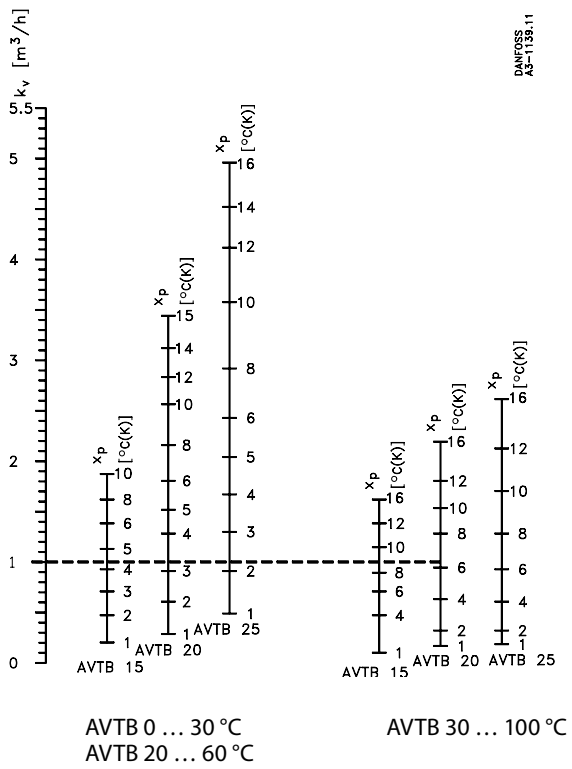


*AVTB diagram to determine valve size, temperature range and proportional band ($X_P$).*

*Note: The values stated are mean values*

## Design

1. Handle for temperature setting
2. Spring housing
3. Setting spring
4. O-ring
5. Diaphragm
6. Spindle
7. Valve body
8. Valve cone
9. Bellows
10. Bellows stop
11. Pressure stem
12. Temperature sensor
13. Sensor stuffing box
14. Housing of sensor stuffing box
15. Gasket of sensor stuffing box
16. Sealing bolt of sensor stuffing box

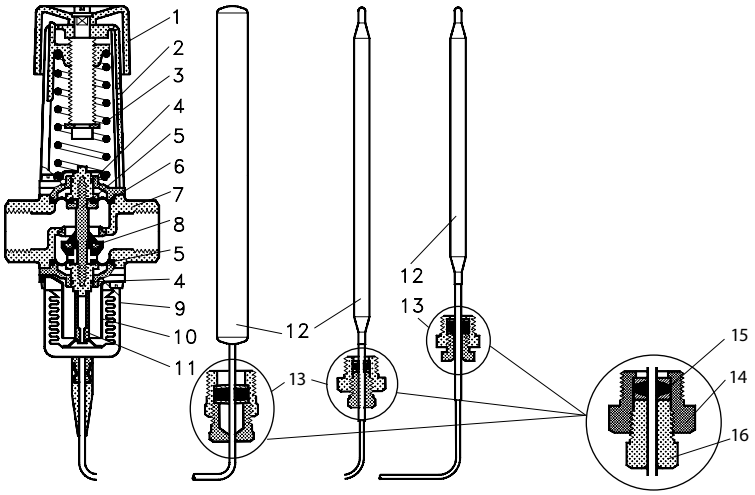


## Settings

*Temperature setting*
Relation between scale numbers 1-5 and the closing temperature.

The values given are approximate.

| Scale setting | 1 | 2 | 3 | 4 | 5 | |
|---|---|---|---|---|---|---|
| Closing temperature | | | | | | |
| (0 … 30 °C) | 0 | 3 | 15 | 23 | 30 | °C |
| (20 … 60 °C) | 20 | 35 | 50 | 60 | 70 | |
| (30 … 100 °C) | 30 | 35 | 55 | 75 | 95 | 120 |

## Dimensions

*AVTB with internal thread*

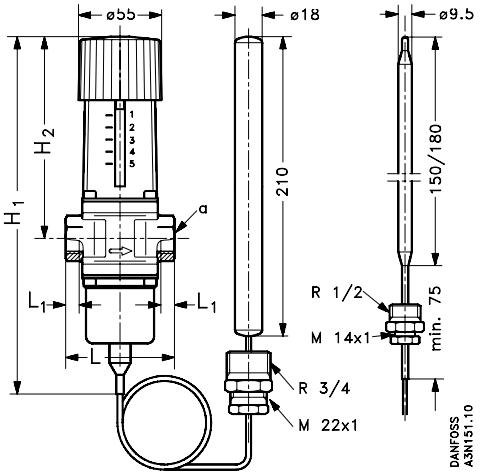


*AVTB with external thread*

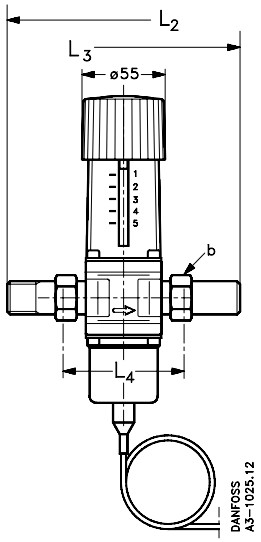


| Type | $H_1$ mm | $H_2$ mm | L mm | $L_1$ mm | L2 mm | L3 mm | L4 mm | a ISO 7/1 (int. thread) | b ISO 228/1 (ext. thread) |
|---|---|---|---|---|---|---|---|---|---|
| AVTB 15 | 217 | 133 | 72 | 14 | 141 | 149 | 75 | $R_p$ ½ | G ¾A |
| AVTB 20 | 217 | 133 | 90 | 16 | 154 | 164 | 80 | $R_p$ ¾ | G 1A |
| AVTB 25 | 227 | 138 | 95 | 19 | 168 | 167 | 83 | $R_p$ 1 | G 1¼A |

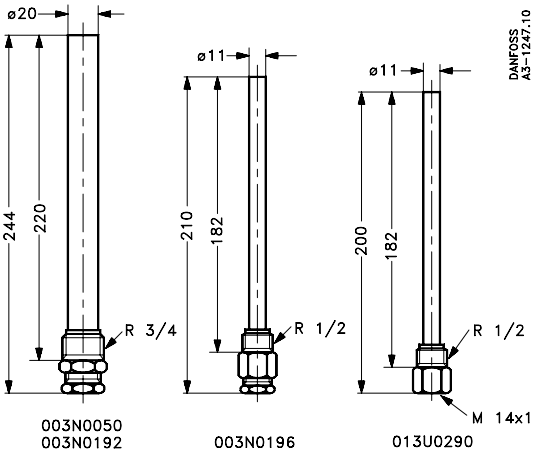


*Immersion pockets*

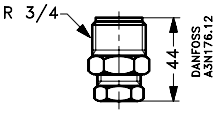


*Sensor stuffing box*

*Weld-on tailpieces*

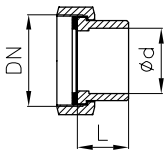


*External thread tailpieces*

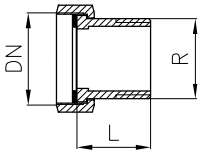


| G (mm) | Ød (mm) | L (mm) | Weight (kg) |
|---|---|---|---|
| 15 | 15 | 35 | 0.18 |
| 20 | 20 | 40 | 0.26 |
| 25 | 27 | 40 | 0.38 |

| G (") | R (") | L (mm) | Weight (kg) |
|---|---|---|---|
| ¾ | ½ | 25.5 | 0.17 |
| 1 | ¾ | 27.5 | 0.27 |
| 1 ¼ | 1 | 32.5 | 0.45 |

ENGINEERING
TOMORROW

**Data sheet**

# Multifunctional Thermostatic Circulation Valve MTCV - Lead free brass

## Introduction

***Fig. 1***
*Basic version - A*

***Fig. 2*** *
*Self-acting version with automatic disinfection function - "B"*
** thermometer is an accessory*

***Fig. 3***
*Version with electronically controlled disinfection process - "C"*

The MTCV is a multifunctional thermostatic balancing valve used in domestic hot water installations with circulation.

The MTCV provides a thermal balance in hot water installations by keeping a constant temperature in the system, thus limiting the flow in the circulation pipes to the minimum required level.

To meet the increasing demands placed on the quality of drinking water, Danfoss MTCV valves are made from corrosion resistant and Lead Free materials:

- Valve body made from rg5 bronze material
- Components made from no Lead Brass
- Main cone made from advanced engineering polymere POM-C.

Simultaneously, the MTCV can realize a disinfection process by means of 2 features:

- An automatic (self-acting) disinfection module - thermo-element (*fig.2*).
- An electronic controller with thermal actuator TWA and temperature sensors PT1000 (*fig.3*).

## Main functions of the MTCV

- Thermostatic balancing of hot water systems within the temperature range of 35 - 60 °C - version A.
- Automatic (self-acting) thermal disinfection at temperatures above 68°C with safety protection of the installation to prevent the temperature rising above 75 °C (automatically shuts-off circulation flow) - version "B".
- Automatic disinfection process, electronically controlled, with the possibility of programming the disinfection temperature and duration - version "C".
- Automatic flushing of the system by temporarily lowering the temperature setting to fully open the MTCV valve for a maximum flow.
- Temperature measurement possibility.
- Preventing of unwanted tampering.
- Constant temperature measurement and monitoring - version "C".
- Shut-off function of the circulation riser by means of optional fittings with a built-in ball valve.
- Modular upgrading of the MTCV valve during operation, under pressurized conditions.
- Servicing - when necessary the calibrated thermo-element can be replaced.

## Function

***Fig. 4*** *MTCV basic version - A*

The MTCV - is a thermostatic self-acting, proportional valve. A thermo-element (*fig. 6 elem. 4*) is placed in the valve cone (*fig. 6 elem. 3*) to react to temperature changes.

When increases the water temperature above the set point value, the thermo-element expands and the valve's cone moves towards the valve seat, thus limiting circulation flow.

When decreases the water temperature below the set point value, the thermo-element will open the valve and allow more flow in the circulation pipe. The valve is in equilibrium (nominal flow = calculated flow) when the water temperature has reached the value set on the valve.

The MTCV regulating characteristic is shown in fig. 13, version A.

When the water temperature is 5 °C higher than the set point value, the flow through the valve stops.

A special sealing of the thermo-element protects it against direct contact with water, which prolongs the durability of the thermo-element and at the same time secures a precise regulation.

A safety spring (*fig. 6 elem. 6*) protects the thermo-element from being damaged when the water temperature exceeds the value on the set point.

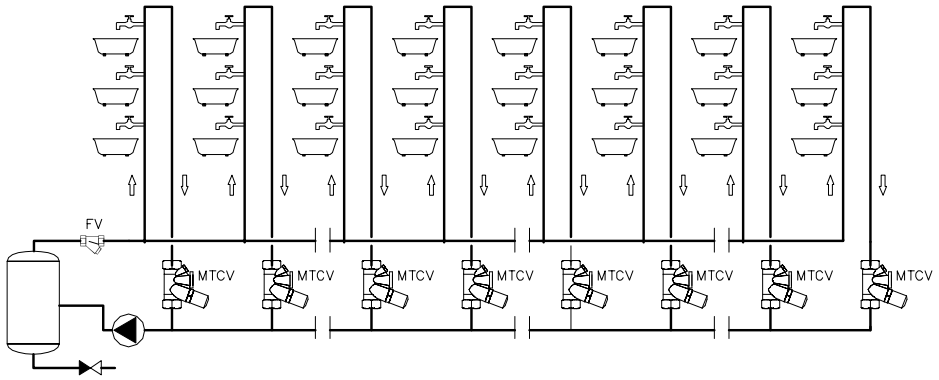


***Fig. 5*** *Example of MTCV / basic version / placement in domestic hot water system*

## Design

1. Valve body
2. Spring
3. Cone
4. Thermo-element
5. O-ring
6. Safety spring
7. Setting ring
8. Setting knob
9. Plug for covering the setting
10. Cone for disinfection module
11. Safety spring
12. Plug for thermometer
13. Plug for disinfection module

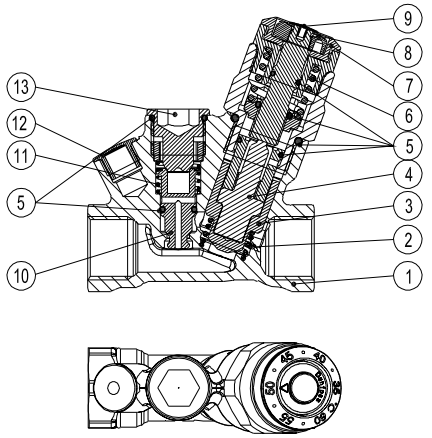


***Fig. 6*** *Design - basic version - A*

## Function

***Fig.7*** *MTCV self-acting version with automatic thermal disinfection function - B*
** thermometer is accessory*

The MTCV standard version - A can easily and quickly be upgraded to the thermal disinfection function against the Legionella bacteria in hot water systems.

After removing the plug from the disinfection plug (*fig. 6 elem. 13*)-(this can be done during working conditions, under pressure) the thermostatic disinfection module can be mounted (*fig. 9 elem. 17*).

The disinfection module will control the flow according to its regulating characteristics, (*fig. 13, version B*) thus performing a thermal disinfection of the hot water installation.

The mounted disinfection module automatically opens a by-pass of Kv min = 0.15 $m^3/h$, which allows flow for the disinfection. In the A version of the MTCV this by-pass is always closed in order to avoid sedimentation of dirt and calcium. The MTCV can thus be upgraded with the disinfection module even after a long period of working in the A version without risking blocking the bypass.

The regulation module in basic version A works within the temperature range 35-60 °C. When the temperature of the hot water increases above 65°C the disinfection process starts - meaning the flow through the main seat of the MTCV valve stops and the bypass opens for the "disinfection flow". The regulating function is now performed by the disinfection module, which opens the bypass when the temperature is above 65 °C.

The disinfection process is performed until a temperature of 70 °C is reached. When the hot water temperature is increased further, the flow through the disinfection bypass is reduced (the process of thermal balancing of the installation during disinfection) and when reaching 75 °C the flow stops. This is to protect the hot water installation against corrosion and sedimentation of calcium as well as to lower the risk of scalding.

A thermometer can optionally be mounted in both version A and B in order to measure and control the temperature of the circulating hot water.

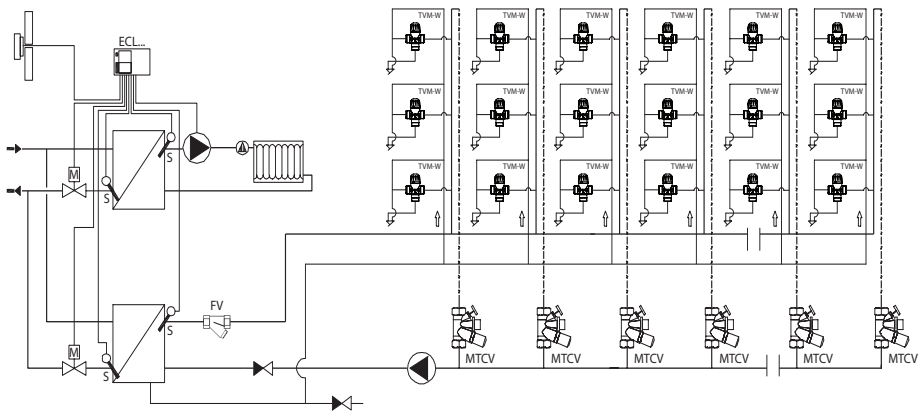


***Fig. 8*** *Scheme of hot water installation with circulation - self acting version.*

## Design

**1-13** As described in fig. 6
**14** Bypass for disinfection
**15** Thermometer
**16** Gasket Cu
**17** Disinfecting module

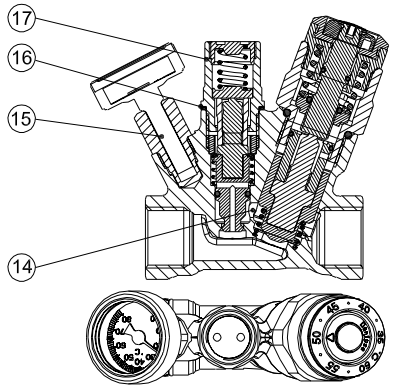


***Fig. 9*** *Design - self-acting version with automatic thermal disinfection function - B*

## Function

***Fig.10*** *Version with electronically controlled disinfection process - C*

The MTCV version "A" and "B" can be upgraded to an electronic regulated disinfection process (version C).

After removing the disinfection plug (*fig. 6 elem. 13*) the adapter can be mounted (*fig. 12 elem. 21*) and the thermo actuator TWA can be mounted.

A temperature sensor PT 1000 has to be mounted in the thermometer head (*fig. 12 elem. 19*). Thermo-actuator and sensor are connected to the electronic regulator CCR2+ which allows an efficient and effective disinfection process in each circulation riser. The main regulation module works within the temperature range 35-60 °C. When the disinfection process/thermal-water treatment starts CCR2+ controls the flow through MTCV via thermo-actuators TWA. Benefits of an electronic regulated disinfection process with CCR2+ are:

- Providing full control over the disinfection process in each individual riser.
- Optimisation of total disinfection time.
- Optional choice of temperature for the disinfection.
- Optional choice of time for the disinfection.
- On-line measurement and monitoring of the water temperature in each individual riser.
- Enabling the possibility of connecting to the controller in the heat substation or boiler room (i.e. Danfoss ECL) or to a BMS (Modbus).

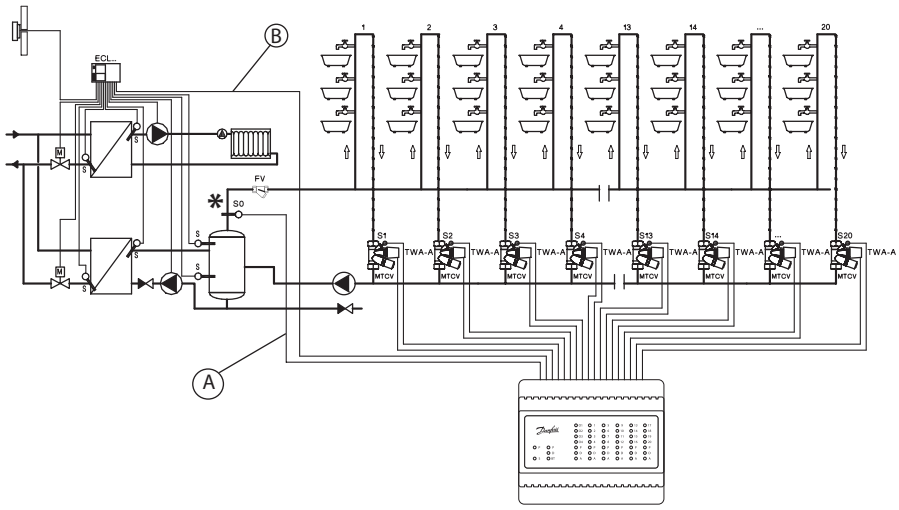


***Fig. 11*** *- scheme of installation for disinfection and registration temperature*

*A) independent system (only sensor S0 needed)*

*B) dependent system (sensor S0 and connection to weather or another control needed)*

## Design

**1-13** As described in fig. 6
**18** Bypass; (position closed)
**19** Temperature sensor PT 1000
**20** Gasket Cu
**21** Adapter to connect thermo-actuator TWA

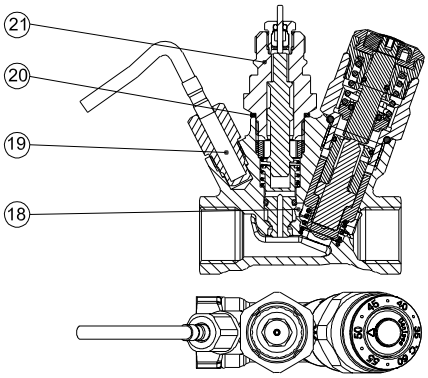


***Fig.12*** *Version with electronically controlled disinfection process - C*

## Technical data

Max. working pressure ..... 10 bar
Test pressure ..... 16 bar
Max. flow temperature ..... 100 °C
$k_{VS}$ at 20 °C:
- DN20 ..... 1.8 $m^3/h$
- DN15 ..... 1.5 $m^3/h$

Hysteresis ..... 1.5 K

*Material of parts in contact with water:*
Valve body ..... Rg5
Spring housing, etc. ..... Cuphin alloy (CW724R)
O-rings ..... EPDM
Spring, bypass cones ..... Stainless steel
Cone ..... POM-C (Acetal Homopolymer)

## Ordering

| Valve - basic version A | Code No. |
|---|---|
| DN 15 | **003Z4515** |
| DN 20 | **003Z4520** |

### Accessories and spare parts

| Accessory | | Comments | Code No. |
|---|---|---|---|
| Thermostatic disinfection module - B | | DN 15/DN 20 | **003Z2021** |
| Fittings with shut-off ball valve (for allen key 5 mm), DN 15 | | G ½ × Rp ½ | **003Z1027** |
| | | G ¾ × Rp ¾ | **003Z1028** |
| Thermometer with adapter | | DN 15/DN 20 | **003Z1023** |
| Socket for ESMB PT1000 | | DN 15/DN 20 | **003Z1024** |
| Adapter for thermo-actuator | | DN 15/DN 20 | **003Z1022** |
| CCR2+ Controller | | also see enclosure **VD.D3.K1.02** | **003Z3851** |
| CCR+ Slave Unit | | also see enclosure **VD.D3.K1.02** | **003Z3852** |
| Temperature sensor ESMB Universal |  | also see enclosure **VD.D3.K1.02** | **087B1184** |
| Temperature sensor ESMC contact | | | **087N0011** |
| Fittings for soldering Cu 15 mm | | DN 15 int. R 1/2" | **003Z1034** |
| Fittings for soldering Cu 18 mm | | | **003Z1035** |
| Fittings for soldering Cu 22 mm | | DN 20 int. R 3/4" | **003Z1039** |
| Fittings for soldering Cu 28 mm | | | **003Z1040** |
| Thermoactuator TWA-A/NC, 24V | | also see enclosure **VD.57.U4.02** | **088H3110** |


© Danfoss | 2019.04 | 5

## Regulating characteristics

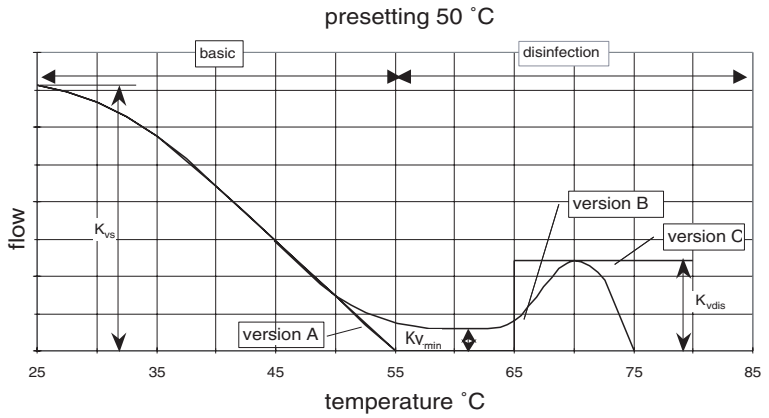


***Fig.13*** *The MTCV regulating characteristics*

- Basic version A
- Version B:
  $Kv_{min}$ = 0.15 m³/h - min. flow through the bypass when main regulation module is closed.
  *$Kv_{dis}$ = 0.60 m³/h for DN 20,
  *$Kv_{dis}$ = 0.50 m³/h for DN 15 - max. flow of the disinfection process by a temperature of 70 °C.
- Version C:
  * $Kv_{dis}$ = 0.60 m³/h for DN 20 and DN 15 - flow through the MTCV when the disinfection module is fully opened (regulation at thermo-actuator TWA-NC).

** $Kv_{dis}$ - Kv during disinfection process*

## Main function setting

| | |
|---|---|
| 1 | Setting ring |
| 2 | Ring with a reference point |
| 3 | Plastic cover - unwanted tampering protection |
| 4 | Hole for screwdriver |
| 5 | Temperature setting screw - Allen-key 2.5 mm |
| 6 | References temperature setting point |

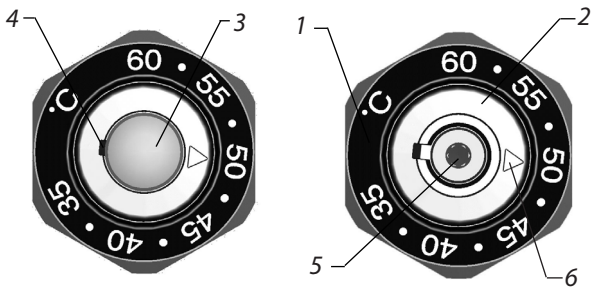


***Fig.14*** *MTCV setting of the temperature*

Temperature range: 35-60 °C
MTCV´s factory pre-setting 50 °C

The temperature setting can be made after removing the plastic cover (3), by lifting it with a screwdriver using the hole (4). The temperature setting screw (5) must be turned with an allen-key to match the wanted temperature on the scale with the reference point. The plastic cover (3) must be pressed back into place after the setting has been made.

It is recommended to control the set temperature with a thermometer. The temperature of the hot water from the last tapping point on the riser must be measured*. The difference between the measured temperature at the last tapping point and the temperature set on the MTCV is due to heat losses in the circulation pipe between the MTCV and the tapping point.

* *where TVM valves (thermostatic mixing valves) are installed the temperature must be measured before the TVM valve.*

## Setting procedure

The required temperature setting of the MTCV depends on the required temperature at the last tap and the heat losses from the tap to MTCV in the same riser.

**Example:**

| | |
|---|---|
| Required temperature at the last tap: | 48 °C |
| Heat losses from the last tap to the MTCV: | 3 K |

*Required:*
correct setting of MTCV

*Solution:*
Correct setting of MTCV: 48 - 3 = 45 °C

***Note:***
*After new setting use the thermometer to check if the required temperature at the tap is reached and correct the MTCV setting accordingly.*

## Pressure and flow chart MTCV - DN 15

Differential pressure 1 bar, DN 15

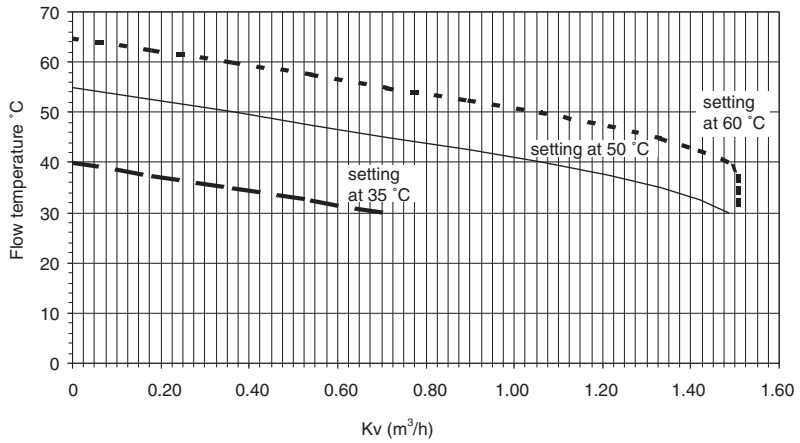


***Fig. 15***

Table 1

| Flow temperature °C | preset 60 °C | preset 55 °C | preset 50 °C | preset 45 °C | preset 40 °C | preset 35 °C | kv (m³/h) |
|---|---|---|---|---|---|---|---|
| | 65 | 60 | 55 | 50 | 45 | 40 | 0 |
| | 62.5 | 57.5 | 52.5 | 47.5 | 42.5 | 37.5 | 0.238 |
| | 60 | 55 | 50 | 45 | 40 | 35 | 0.427 |
| | 57.5 | 52.5 | 47.5 | 42.5 | 37.5 | 32.5 | 0.632 |
| | 55 | 50 | 45 | 40 | 35 | 30 | 0.795 |
| | 52.5 | 47.5 | 42.5 | 37.5 | 32.5 | | 0.963 |
| | 50 | 45 | 40 | 35 | 30 | | 1.087 |
| | 47.5 | 42.5 | 37.5 | 32.5 | | | 1.202 |
| | 45 | 40 | 35 | 30 | | | 1.283 |
| | 42.5 | 37.5 | 32.5 | | | | 1.351 |
| | 40 | 35 | 30 | | | | 1.394 |
| | 37.5 | 32.5 | | | | | 1.437 |
| | 35 | 30 | | | | | 1.469 |
| | 32.5 | | | | | | 1.500 |
| | 30 | | | | | | 1.500 |

Differential pressure 1 bar, DN 15 - disinfection process

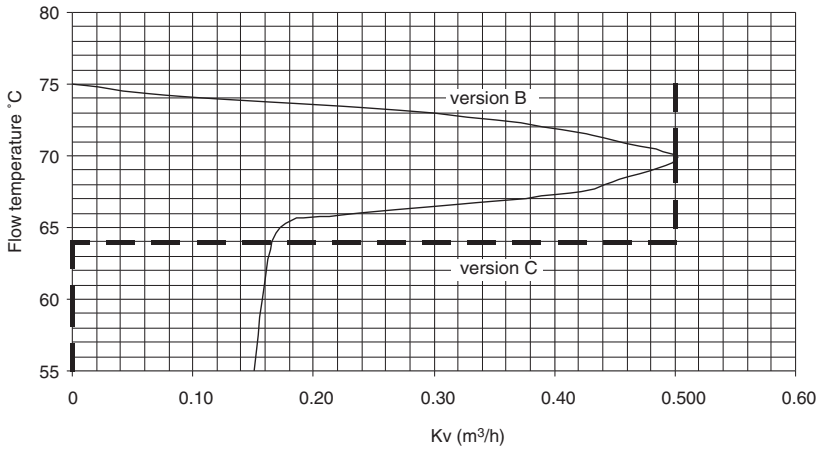


***Fig. 16***


© Danfoss | 2019.04 | 7

**Pressure and flow chart MTCV - DN 20**

Differential pressure 1 bar, DN 20

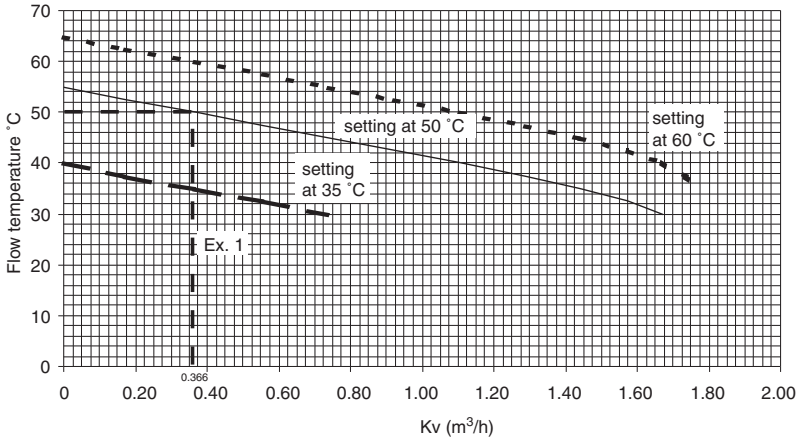


*Fig. 17*

Table 2

| | preset 60 °C | preset 55 °C | preset 50 °C | preset 45 °C | preset 40 °C | preset 35 °C | kv (m³/h) |
|---|---|---|---|---|---|---|---|
| Flow temperature °C | 65 | 60 | 55 | 50 | 45 | 40 | 0 |
| | 62.5 | 57.5 | 52.5 | 47.5 | 42.5 | 37.5 | 0.251 |
| | 60 | 55 | 50 | 45 | 40 | 35 | 0.442 |
| | 57.5 | 52.5 | 47.5 | 42.5 | 37.5 | 32.5 | 0.645 |
| | 55 | 50 | 45 | 40 | 35 | 30 | 0.828 |
| | 52.5 | 47.5 | 42.5 | 37.5 | 32.5 | | 1.000 |
| | 50 | 45 | 40 | 35 | 30 | | 1.164 |
| | 47.5 | 42.5 | 37.5 | 32.5 | | | 1.322 |
| | 45 | 40 | 35 | 30 | | | 1.462 |
| | 42.5 | 37.5 | 32.5 | | | | 1.577 |
| | 40 | 35 | 30 | | | | 1.667 |
| | 37.5 | 32.5 | | | | | 1.733 |
| | 35 | 30 | | | | | 1.753 |
| | 32.5 | | | | | | 1.761 |
| | 30 | | | | | | 1.761 |

Differential pressure 1 bar, DN 20 - disinfection process

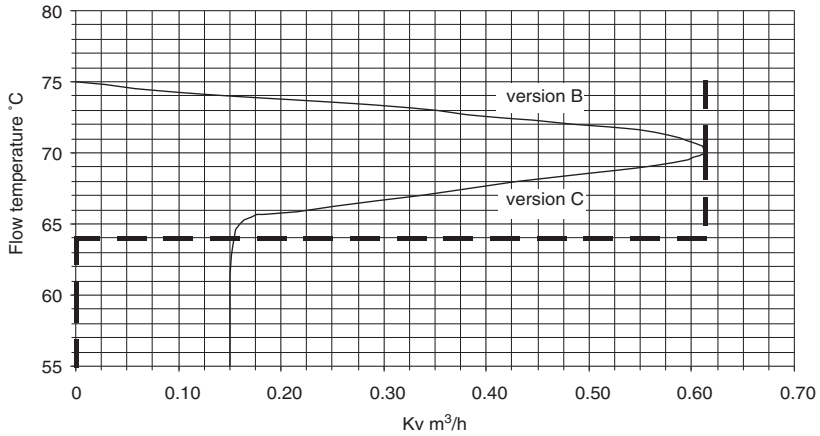


*Fig. 18*

## Example of calculation

**Example:**
*The calculation is done for a 3-storey building with 8 risers.*

*The following assumptions were used in order to simplify calculation:*
- *Heat losses per meter of the pipe, $q_1$ =10 W/m **

** during calculation it is required to calculate heat losses according to the country-specific standards.*

Usually the calculated heat loses are dependent on :
- The dimension of the pipe
- The materials used in insulations
- The ambient temperature where the pipe is located
- The efficiency and condition of insulation

- Inlet of hot water temperature, $T_{sup}$ = 55 °C
- Temperature drop through the system, ΔT= 5 K
- Distance between risers, L = 10 m
- Height of the risers, l = 10 m

- Installation scheme as shown below:

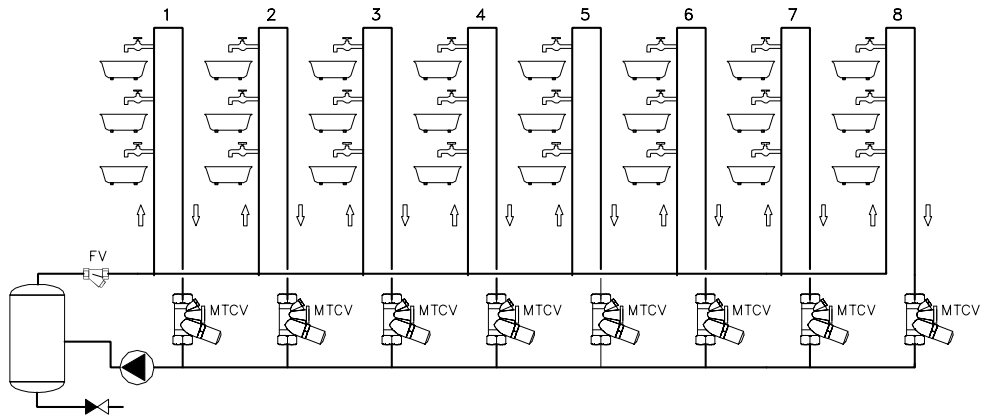


***Fig. 19*** *Scheme of installation*

### I Basic operation

Calculation:
- calculation of heat losses in each riser (Qr) and header (Qh)
  Qr = l riser x q = ( 10 + 10 ) x 10 = 200 W
  Qh = l horiz. x q = 10 x 10= 100 W
- The table 3 shows the results of the calculations:

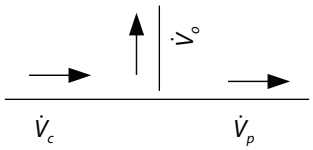


$$\dot{V}_c = \frac{\dot{V}_o}{\dot{V}_o + \dot{V}_p}$$

Table 3

| riser | heat losses | | | | | | |
|---|---|---|---|---|---|---|---|
| | In risers | In header | Total in each part (W) | ΣQ total (W) | Factor risers | Flow in each part | Total flow |
| | Qr (W) | Qh (W) | | | | Vo (l/h) | Vc (l /h) |
| 1 | 200 | 100 | 300 | **2400** | - | 36 | **412** |
| 2 | | | | 2100 | 0.09 | 38 | 376 |
| 3 | | | | 1800 | 0.1 | 40 | 339 |
| 4 | | | | 1500 | 0.12 | 43 | 299 |
| 5 | | | | 1200 | 0.14 | 47 | 256 |
| 6 | | | | 900 | 0.18 | 52 | 210 |
| 7 | | | | 600 | 0.25 | 63 | 157 |
| 8 | | | | 300 | 0.4 | 94 | 94 |

**Example of calculation**
*(continuous)*

- The total flow in the hot water circulation system is calculated using formula:

$$\dot{V} = \frac{\sum \dot{Q}}{r \quad c_w \quad \Delta t_{hw}}$$

ΣQ - total heat loses in installation, (kW)

thus:

$$\dot{V}_C^{total} = \frac{2.4}{1 \times 4.18 \times 5}$$

$$= 0.114 \text{ l/s} = 412 \text{ l/h}$$

The total flow in hot water circulation system is: 412 l/h - the circulation pump shall be sized for this flow.

- The flow in each riser is calculated using formula:

Flow in the riser number 1:

$$\dot{V}_o = \dot{V}_c \times \frac{Q_o}{Q_o + Q_p}$$

thus:

$$\dot{V}_0^1 = 412 \times \frac{200}{200 + 2100}$$

$$= 35.84 \text{ l/h} \cong 36 \text{ l/h}$$

Flow in remaining risers should be calculated in the same way.

- The pressure drop in the system
Following assumptions were made to simplify calculation:
  - Linear pressure drop, $p_l = 60$ Pa/m
    (Linear pressure is the same for all pipes)
  - Local pressure drop is equal to 33 % of total linear pressure drop, $p_r = 0.33\ p_l$

thus:
$p_r = 0.33 \times 60 = 19.8$ Pa/m ≅ 20 Pa/m
  - For the calculation used
    $p_{basic} = p_r + p_l = 60 + 20 = 80$ Pa/m
  - Local pressure drop across the MTCV is calculated on the basis of:

$$\Delta p_{MTCV} = \left( \frac{0.01 \times \dot{V}_0}{Kv} \right)^2$$

where:
Kv - according to fig. 19 page 10 in this case
Kv = 0.366 m³/h for preset 50 °C
$\dot{V}_0$ - flow through the MTCV at the flow temperature 50 °C (l/h)

- When designed flow have been calculated, use the fig. 17 on page 9.

***Please note:***
*during pressure drop calculation across the valve the temperature of circulation water has to be observed. MTCV - Multifunction Thermostatic Circulation Valve has variable Kv value which is dependent on two values: the preset temperature and the temperature of the flow temperature.*

When the $\dot{V}_0$ and Kv are known, the pressure drop across MTCV is calculated using the following formula:

$$\Delta p_{MTCV} = \left( \frac{0.01 \times \dot{V}_0}{Kv} \right)^2$$

thus:

$$\Delta p_{MTCV} = \left( \frac{0.01 \times 94}{0.366} \right)^2 = 6.59 \text{ kPa}$$

$$\Delta p_{MTCV} = (0.01 \times 94 / 0.366)^2 = 6.59 \text{ kPa}$$

- Differential pressure across the pump:

$$^*p_{pump} = \Delta p_{circuit} + \Delta p_{MTCV}$$
$$= 14.4 + 6.59 = 21 \text{ kPa}$$

Where:
$\Delta p_{circuit}$ - pressure drop in critical circuit (table 4)
$^*p_{pump}$ - includes pressure drop across all devices in circulation installation like: boiler, strainer etc.

Table 4

| riser | pressure drop | | | across the MTCV | | Total pressure pump (kPa) |
|---|---|---|---|---|---|---|
| | In risers (kPa) | In header (kPa) | $p_{circuit}$ (kPa) | $V_0$-flow (l/h) | ΔmMTCV pressure drop (kPa) | |
| 1 | 1.6 | 1.6 | 14.4 | 36 | 0.97 | 21 |
| 2 | | | 12.8 | 38 | 1.07 | |
| 3 | | | 11.2 | 40 | 1.19 | |
| 4 | | | 9.6 | 43 | 1.38 | |
| 5 | | | 8.0 | 47 | 1.64 | |
| 6 | | | 6.4 | 52 | 2.01 | |
| 7 | | | 4.8 | 63 | 2.96 | |
| 8 | | | 3.2 | 94 | 6.59 | |

**Example of calculation**
*(continuous)*

**II Disinfection**

The heat losses and pressure drop should be calculated according to new conditions.

- inlet hot water temperature during disinfection $T_{dis}$ = 70 °C
- ambient temperature *$T_{amb}$ = 20 °C (*$T_{amb}$ - according to standard and norm obligatory)

1. The heat losses are calculated from the formula:
   $q_1 = K_j \times l \times \Delta T_1 \rightarrow K_j \times l = q_1/\Delta T_1$ for basic process

   $q_2 = K_j \times l \times \Delta T_2 \rightarrow K_j \times l = q_2/\Delta T_2$

   for disinfection process
   Thus :

   $$q_2 = q_1 \frac{\Delta T_2}{\Delta T_1} = q_1 \left( \frac{T_{dis} - T_{amb}}{T_{sup} - T_{amb}} \right)$$

   for given case:

   $$q_2 = 10\,(W/m) \left( \frac{70\,°C - 20\,°C}{55\,°C - 20\,°C} \right) = 14.3\,W/m$$

   In this case during disinfection process heat losses increase for around 43 %.

2. Required flow
   Due to sequence disinfection process (step by step) only critical circuit should be calculated.

   For given case:

   $Q_{dis} = Q_r + Q_h$
   $Q_{dis} = ((10+10) + (8 \times 10)) \times 14.3$ W/m = 1430 W = 1.43 kW

   The flow:

   $$\dot{V}_{dis} = \frac{1.43}{4.18 \times 5} = 0.0684\,l/s = 246\,l/h$$

3. The required pressure
   The required pressure during the disinfection process should be checked
   $p_{dispump} = p_{dis(circuit)} + \Delta p_{MTCV}$
   where:

   $$\Delta p_{MTCV} = \left( \frac{0.01 \times \dot{V}_0}{Kv} \right)^2$$

thus:

$$\Delta p_{MTCV} = \left( \frac{0.01 \times 246}{0.6} \right)^2 = 16.81\,kPa$$

Due to lower flow comparing to basic condition (412 l/h), pressure drop in the installation, $p_{circuit}$ should be recalculated.

$$\Delta p = \xi \frac{\rho w^2}{2}$$

where :
w - velocity of the water (m/s)

By comparing conditions during basic operation and disinfection one can estimate:

$$p_{dis} = p_{basic} \times \frac{V_{dis}^2}{V_c^2}$$

where :
$V_{dis}$ - disinfection flow (l/h)
$V_C$ - basic flow (l/h)

Thus:
- for first part of installation

$$p_{dis}^1 = 80 \times \left( \frac{246}{412} \right)^2 = 29\,Pa/m$$

This calculation should be done for all critical circuit. The table 5 shows the result of calculation.

For the critical circuit:
$p_{dis(circuit)}$ = 0.57 + 0.68 + 0.84 + 1.08 + 1.48 + 2.20 + 3.93 + 21.92 = 32.70 kPa

$p_{dispump} = p_{dis(circuit)} + \Delta p_{MTCV}$
= 32.70 + 16.81 = 49.51 kPa

The pump should be chosen to cover both requirements:

• basic operation,
$\dot{V}_0$= 412 l/h and $p_{pump}$ = 21 kPa

• disinfection operation
$\dot{V}_0$= 246 l/h and $P_{pump}$ = 49.51 kPa

Table 5

| pressure drop the circuit during disinfection process | | | | | Total pressure drop in critical circuit |
|---|---|---|---|---|---|
| flow (l/h) | | new pressure drop (Pa/m) | length (m) | pressure drop (kPa) | |
| basic | disinfection | | | | |
| 412 | 246 | 29 | 20 | 0.57 | 32.70 |
| 376 | 246 | 34 | | 0.68 | |
| 339 | 246 | 42 | | 0.84 | |
| 299 | 246 | 54 | | 1.08 | |
| 256 | 246 | 74 | | 1.48 | |
| 210 | 246 | 110 | | 2.20 | |
| 157 | 246 | 196 | | 3.93 | |
| 94 | 246 | 548 | 40 | 21.92 | |
| | | | | ∑ 32.70 | |


© Danfoss | 2019.04 | 11

## Dimensions

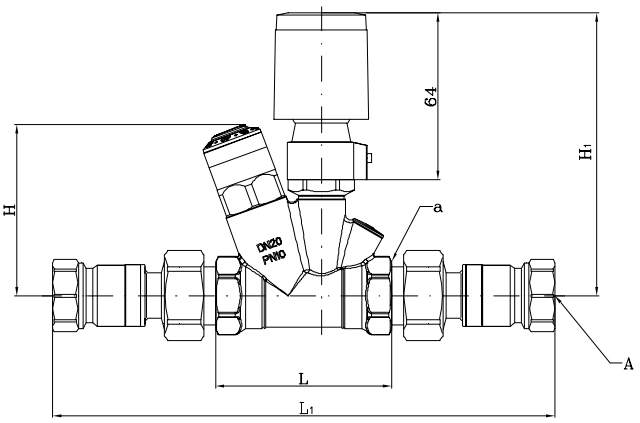


| Internal thread | A | a | H | H1 | L | L1 | Weight (kg) |
|---|---|---|---|---|---|---|---|
| | ISO 7/1 | | mm | | | | |
| DN 15 | $R_p$ ½ | $R_p$ ½ | 79 | 129 | 75 | 215 | 0.56 |
| DN 20 | $R_p$ ¾ | $R_p$ ¾ | 92 | 129 | 80 | 230 | 0.63 |

***Fig. 20***

**Danfoss A/S**
Heating Segment • heating.danfoss.com • +45 7488 2222 • E-Mail: heating@danfoss.com

Danfoss can accept no responsibility for possible errors in catalogues, brochures and other printed material. Danfoss reserves the right to alter its products without notice. This also applies to products already on order provided that such alterations can be made without subsequential changes being necessary in specifications already agreed.
All trademarks in this material are property of the respective companies. Danfoss and all Danfoss logotypes are trademarks of Danfoss A/S. All rights reserved.

ENGINEERING
**TOMORROW**

**Data sheet**

# Temperature controller for heating (PN 25)

## **AVT / VG** - external thread
## **AVT / VGF** - flange

### Description

DIN Geprüft TR(TW)700

The AVT / VG(F) controller is a self-acting proportional temperature controller developed primarily for domestic hot water (DHW) production:
- Hot water tanks
- Storage charge systems
- Instantaneous domestic hot water production (AVT 255 mm version)

It can be used in mixing loops and room heating systems as well.

Controller closes on rising temperature.

The controller has a control valve VG(F), thermostatic actuator and handle for temperature setting. Thermostatic actuator consist of bellows, capillary tube and sensor.

The temperature controller is type-tested according to EN 14597 and can be used in combinations with safety temperature monitors STM and safety temperature limiters STL.

**Main data:**
- DN 15-50
- $k_{VS}$ 0.4 -25 m³/h
- PN 25
- Setting ranges:
  –10 … 40 °C / 20 … 70 °C / 40 … 90 °C / 60 … 110 °C
  and
  10 … 45 °C / 35 … 70 °C / 60 … 100 °C / 85 … 125 °C
- Temperature:
  - Circ. water / glycolic water up to 30 %:
    2 … 150 °C
- Connections:
  - Ext. thread (weld-on, thread and flange tailpieces)
  - Flange
- Flow and return mounting.

### Ordering

*Example:*
*Temperature controller, DN 15;*
*$k_{VS}$ 1.6 ; PN 25; setting range 40 … 90 °C;*
*$T_{max}$ 150 °C; ext. thread*

- *1× VG DN 15 valve*
  *Code No:* ***065B0772***
- *1× AVT thermostatic actuator, 40 … 90 °C*
  *Code No:* ***065-0598***

*Option:*
- *1× Weld-on tailpieces*
  *Code No:* ***003H6908***

**VG, VGF** valve

| Picture | DN (mm) | $k_{VS}$ (m³/h) | Connection | | Code No. |
|---|---|---|---|---|---|
| 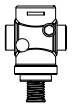 | 15 | 0.4 | Cylindrical external thread acc. to ISO 228 / 1 | G ¾ A | **065B0770** |
| | | 1.0 | | | **065B0771** |
| | | 1.6 | | | **065B0772** |
| | | 2.5 | | | **065B0773** |
| | | 4.0 | | | **065B0774** |
| | 20 | 6.3 | | G 1 A | **065B0775** |
| | 25 | 8.0 | | G 1¼ A | **065B0776** |
| | 32 | 12.5 | | G 1¾ A | **065B0777** |
| | 40 | 16 | | G 2 A | **065B0778** |
| | 50 | 20 | | G 2½ A | **065B0779** |
| 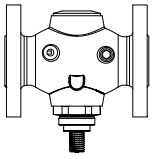 | 15 | 4.0 | Flanges PN 25, acc. to EN 1092-2 | | **065B0780** |
| | 20 | 6.3 | | | **065B0781** |
| | 25 | 8.0 | | | **065B0782** |
| | 32 | 12.5 | | | **065B0783** |
| | 40 | 20 | | | **065B0784** |
| | 50 | 25 | | | **065B0785** |

**Ordering** *(continuous)*

**AVT** thermostatic actuator

| Picture | For valves | Setting range (°C) | Temperature sensor with brass immersion pocket, length, connection | Code No. |
|---|---|---|---|---|
| 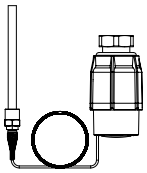 | DN 15-25 | –10 … +40 | 170 mm, R ½ [1] | **065-0596** |
| | | 20 … 70 | | **065-0597** |
| | | 40 … 90 | | **065-0598** |
| | | 60 … 110 | | **065-0599** |
| | DN 32-50 | –10 … +40 | 210 mm, R ¾ [1] | **065-0600** |
| | | 20 … 70 | | **065-0601** |
| | | 40 … 90 | | **065-0602** |
| | | 60 … 110 | | **065-0603** |
| | DN 15-50 | 10 … 45 | 255 mm, R ¾ [1] [2] | **065-0604** |
| | | 35 … 70 | | **065-0605** |
| | | 60 … 100 | | **065-0606** |
| | | 85 … 125 | | **065-0607** |

*[1] conic male thread EN 10226*
*[2] without immersion pocket*

**Accessories** for valves

| Picture | Type designation | DN | Connection | | Code No. |
|---|---|---|---|---|---|
| | Weld-on tailpieces | 15 | - | | **003H6908** |
| | | 20 | | | **003H6909** |
| | | 25 | | | **003H6910** |
| | | 32 | | | **003H6911** |
| | | 40 | | | **065B2006** |
| | | 50 | | | **065B2007** |
| | External thread tailpieces | 15 | Conical ext. thread acc. to EN 10226-1 | R ½ | **003H6902** |
| | | 20 | | R ¾ | **003H6903** |
| | | 25 | | R 1 | **003H6904** |
| | | 32 | | R 1¼ | **003H6905** |
| | | 40 | | R 1½ | **065B2004** |
| | | 50 | | R 2 | **065B2005** |
| 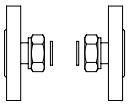 | Flange tailpieces | 15 | Flanges PN 25, acc. to EN 1092-2 | | **003H6915** |
| | | 20 | | | **003H6916** |
| | | 25 | | | **003H6917** |

**Accessories** for thermostats

| Picture | Type designation | PN | For valves | Material | Code No. |
|---|---|---|---|---|---|
| 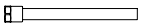 | Immersion pocket | 25 | DN 15-25 | Brass | **065-4414** [1] |
| | | | | Stainless steel, mat. No. 1.4571 | **065-4415** [1] |
| | | | DN 32-50 | Brass | **065-4416** [1] |
| | | | | Stainless steel, mat. No. 1.4435 | **065-4417** [1] |
| 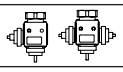 | Combination piece K2 | | | | **003H6855** |
| | Combination piece K3 | | | | **003H6856** |

*[1] Not for AVT thermostatic actuator code numbers: 065-0604, 065-0605, 065-0606, 065-0607*

**Service kits**

| Picture | Type designation | **DN** (mm) | $k_{VS}$ ($m^3/h$) | Code No. |
|---|---|---|---|---|
| | Valve insert | 15 | 0.4 | **003H6869** |
| | | | 1.0 | **003H6870** |
| | | | 1.6 | **003H6871** |
| | | | 2.5 | **003H6872** |
| | | | 4.0 | **003H6873** |
| | | 20 | 6.3 | **003H6874** |
| | | 25 | 8.0 | **003H6875** |
| | | 32 / 40 / 50 | 125 / 16 / 20 / 25 | **003H6876** |
| | Housing of sensor stuffing box | | **for sensors** | **Code No.** |
| | | | AVT 170 R ½ | **065-4420** |
| | | | AVT 210, 255 R ¾ | **065-4421** |


© Danfoss | 2020.08

## Technical data

### Valves

| Nominal diameter | | DN | 15 | | | | | 20 | 25 | 32 | 40 | 50 |
|---|---|---|---|---|---|---|---|---|---|---|---|---|
| $k_{VS}$ value | | m³/h | 0.4 | 1.0 | 1.6 | 2.5 | 4.0 | 6.3 | 8 | 12.5 | 16 / 20 [1] | 20 / 25 [1] |
| Stroke | | mm | 3 | | 5 | | | | | 10 | | |
| Control ratio | | | > 1:50 | | | | | | | | | |
| Control characteristic | | | linear | | | | | | | | | |
| Cavitation factor z | | | ≥ 0.6 | | | | | | ≥ 0.55 | | ≥ 0.5 | |
| Leakage acc. to standard IEC 534 | | % of $k_{VS}$ | ≤ 0.02 | | | | | | | ≤ 0.05 | | |
| Nominal pressure | | PN | 25 | | | | | | | | | |
| Max. differential pressure | | bar | 20 | | | | | | | 16 | | |
| Medium | | | Circulation water / glycolic water up to 30 % | | | | | | | | | |
| Medium pH | | | Min. 7, max. 10 | | | | | | | | | |
| Medium temperature | | °C | 2 … 150 | | | | | | | | | |
| Connections | valve | | External thread | | | | | | | | | |
| | | | - | | | | Flange | | | | | |
| | tailpieces | | Weld-on and external thread | | | | | | | | | |
| | | | Flange | | | | | | | - | | |
| **Materials** | | | | | | | | | | | | |
| Valve body | thread | | Red bronze CuSn5ZnPb (Rg5) | | | | | | | Ductile iron EN-GJS-400-18-LT (GGG 40.3) | | |
| | flange | | - | | | | Ductile iron EN-GJS-400-18-LT (GGG 40.3) | | | | | |
| Valve seat | | | Stainless steel, mat. No. 1.4571 | | | | | | | | | |
| Valve cone | | | Dezincing free brass CuZn36Pb2As | | | | | | | | | |
| Sealing | | | EPDM | | | | | | | | | |
| Pressure relieve system | | | Piston | | | | | | | | | |

[1] *Flange valve body*

### Thermostatic actuator

| | | |
|---|---|---|
| Setting range $X_s$ | °C | –10 … 40 / 20 … 70 / 40 … 90 / 60 … 110<br>10 … 45 / 35 … 70 / 60 … 100 / 85 … 125 |
| Time constant T acc. to EN 14597 | s | max. 50 (170 mm, 210 mm), max. 30 (255 mm) |
| Gain $K_s$ | mm / °K | 0.2 (170 mm), 0.3 (210 mm), 0.7 (255 mm) |
| Max. adm. temperature at sensor | | 50 °C above maximum setpoint |
| Max. amb. temperature at sensor | °C | 0 … 70 |
| Nominal pressure sensor | PN | 25 |
| Nominal pressure immersion pocket | PN | 25 |
| Capillary tube length | | 5 m (170 mm, 210 mm), 4 m (255 mm) |
| **Materials** | | |
| Temperature sensor | | Cooper |
| Immersion pocket [1] | Ms design | Brass, nickel-plated |
| | Stainless steel design | Mat. No. 1.4571 (170 mm), mat. No. 1.4435 (210 mm) |
| Handle for temp. setting | | Polyamide, glass fiber-reinforced |
| Scale carrier | | Polyamide |

[1] *for sensor 170 and 210 mm*

## Application principles

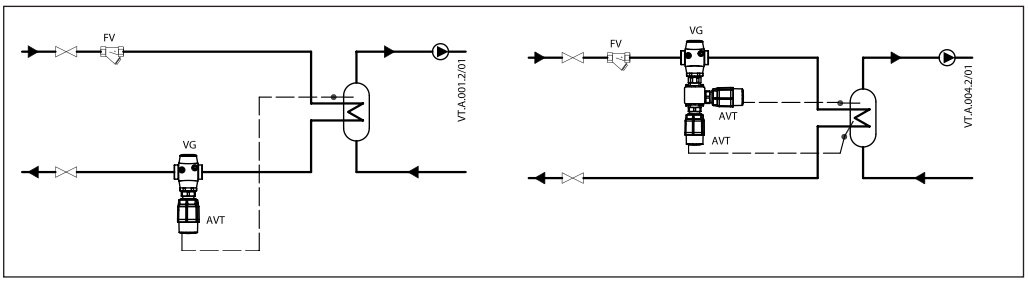

## Combinations

*Example:*
*Temperature controller with safety temperature monitor, DN 15; $k_{VS}$ 1.6 ; PN 25; setting range 40 … 90 °C; $T_{max}$ 150 °C; ext. thread*

- *1× VG DN 15 valve*
  *Code No:* ***065B0772***
- *1× AVT thermostatic actuator, 40 … 90 °C*
  *Code No:* ***065-0598***
- *1× STM thermostat, 30 … 110 °C*
  *Code No:* ***065-0608***
- *1× K2 combination piece*
  *Code No:* ***003H6855***

*Products will be delivereed separatly*

***Note:***
*For safety temperature monitor STM / VG(F) data and safety temperature limiter STLV data see relevant data sheet.*

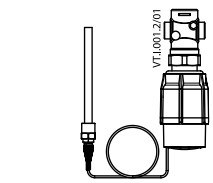


*AVT / VG*
*- temperature controller*

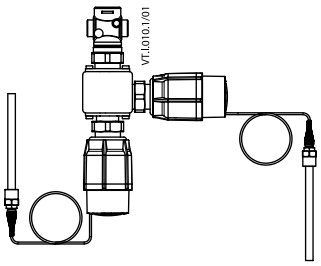


*AVT / AVT / VG*
*- two temperature controllers*

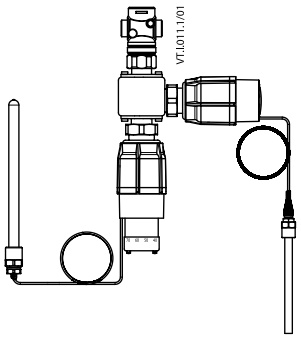


*STM / AVT / VG*
*- temperature controller with safety temperature monitor*

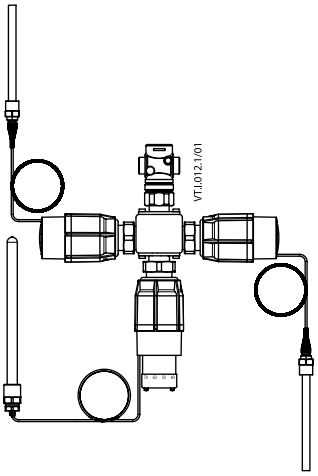


*STM / AVT / AVT / VG*
*- two temperature controllers with safety temperature monitor*

## Installation positions

Temperature controller
Temperature controller AVT / VG(F) can be installed in any position.

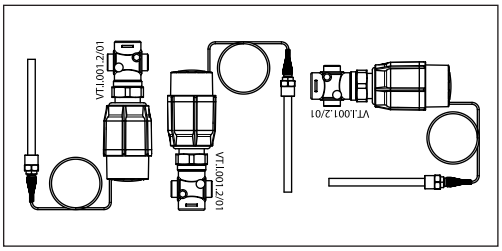



© Danfoss | 2020.08

**Installation positions**
*(continuous)*

*Temperature sensor*
The place of installation must be chosen in a way that the temperature of the medium is directly taken without any delay. Avoid overheating of temperature sensor. The temperature sensor must be immersed into the medium in its full length.

*Temperature sensors 170 mm R ½ and 210 mm R ¾*
- The temperature sensor may be installed in any position.

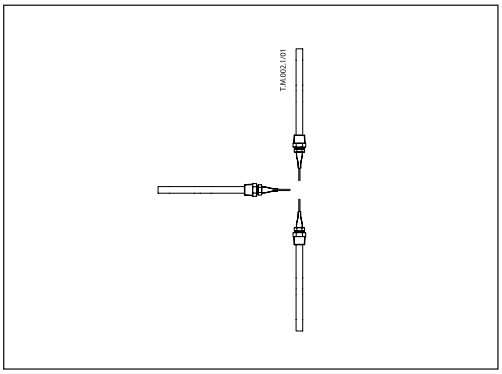


*Temperature sensor 255 mm R ¾*
- The temperature sensor must be installed as shown on the picture.

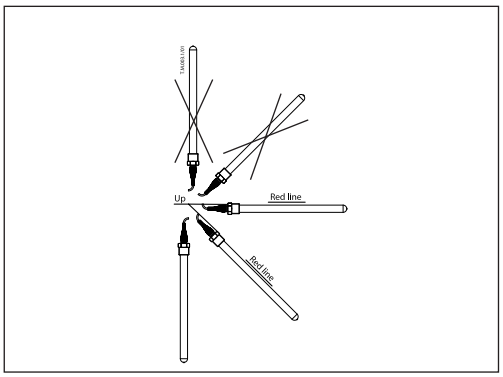


**Pressure temperature diagram**

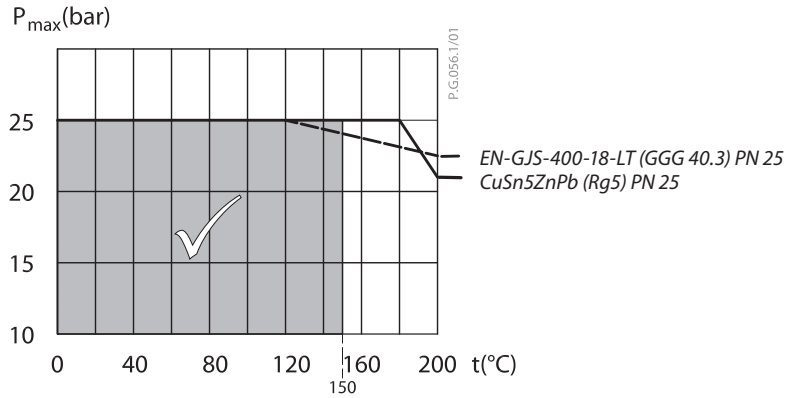


*Maximum allowed operating pressure as a function of medium temperature (according to EN 1092-2 and EN 1092-3).*

## Valve sizing

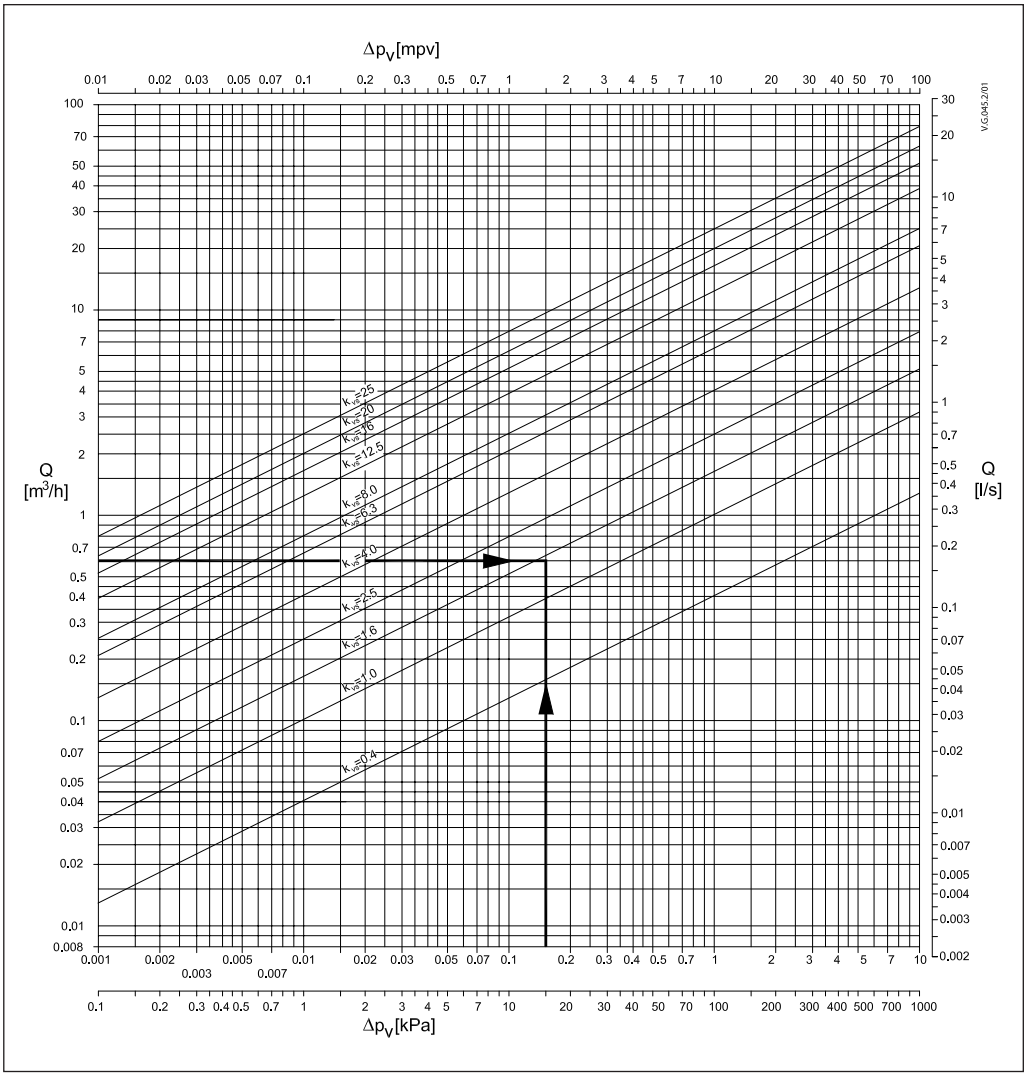


Given data:
$P_{max}$ = 14 kW
$\Delta t$ = 20 K
$\Delta p_v$ = 0.15 bar

$P_{max}$ - heating power (kW)
$\Delta t$ -temperature difference (K)
$\Delta p_v$ - differential pressure across the valve

Maximum flow $Q_{max}$ ($m^3/h$) through the valve is calculated according to formula:

$$Q_{max} = \frac{P_{max} \times 0{,}86}{\Delta t} = \frac{14 \times 0{,}86}{20}$$

$Q_{max}$ = 0.6 $m^3/h$

$k_v$ value is calculated according to formula:

$$k_v = \frac{Q_{max}}{\sqrt{\Delta p_V}} = \frac{0{,}6}{\sqrt{0{,}15}}$$

$k_v$ = 1.5 $m^3/h$

Chosen $k_{VS}$ = 1.6 $m^3/h$

or read from the sizing diagram by taking a line through Q scale (0.6 $m^3/h$) and $\Delta p_v$ scale (0.15 bar) to intersect $k_v$-scale at 1.5 $m^3/h$

Chosen $k_{VS}$ = 1.6 $m^3/h$

Solution:
The example selects
1) ext. thread valve VG DN 15, $k_{VS}$ value 1.6 or
2) flange valve VGF DN 15, $k_{VS}$ value 1.6


© Danfoss | 2020.08

## Design

1. Valve VG(F)
2. Valve insert
3. Pressure relieved valve cone
4. Valve stem
5. Union nut
6. Thermostatic actuator AVT
7. Thermostat stem
8. Bellows
9. Setting spring for temperature control
10. Handle for temperature setting, prepared for sealing
11. Scale carrier
12. Capillary tube
13. Flexible protected pipe (only at AVT 255 mm)
14. Temperature sensor
15. Immersion pocket
16. Sensor stuffing box
17. Housing of sensor stuffing box

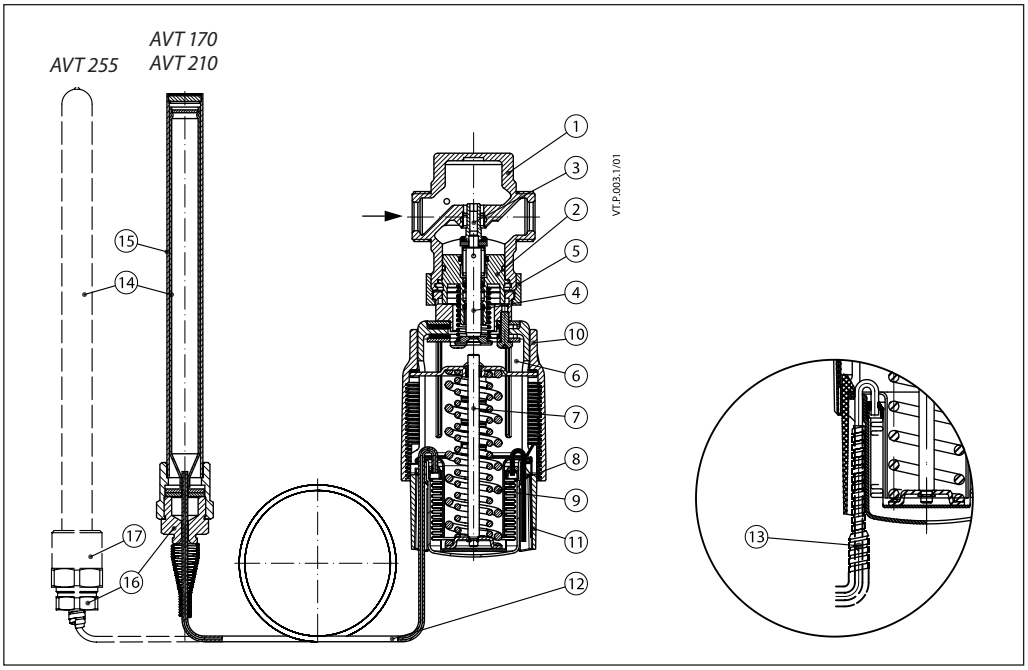


## Function

Medium temperature changes cause pressure changes in temperature sensor. Resulting pressure is being transferred through the capillary tube to the bellows. Bellows moves thermostat stem and opens or closes the valve.

By increasing of medium temperature valve cone moves towards the seat (valve closes), by decreasing of medium temperature valve cone moves away from the seat (valve opens).

Handle for temperature setting can be sealed.

## Settings

*Temperature setting*
Temperature setting is being done by the adjustment of the setting spring for temperature control. The adjustment can be done by means of handle for temperature setting and/or temperature indicators.

## Adjustment diagram

*Temperature setting*
Relation between scale numbers 1-5 and closing temperature.

***Note:*** *The values given are approximate*

*AVT Thermostat ... 170 mm, 210 mm*

| I | II | III | IIII | IIIII | |
|---|---|---|---|---|---|
| -10 | 3 | 15 | 28 | 40 | °C |
| 20 | 33 | 45 | 58 | 70 | |
| 40 | 53 | 65 | 78 | 90 | |
| 60 | 73 | 85 | 98 | 110 | |

*AVT Thermostat ... 255 mm*

| I | II | III | IIII | IIIII | |
|---|---|---|---|---|---|
| 10 | 19 | 28 | 36 | 45 | °C |
| 35 | 44 | 53 | 61 | 70 | |
| 60 | 70 | 80 | 90 | 100 | |
| 85 | 95 | 105 | 115 | 125 | |

## Dimensions

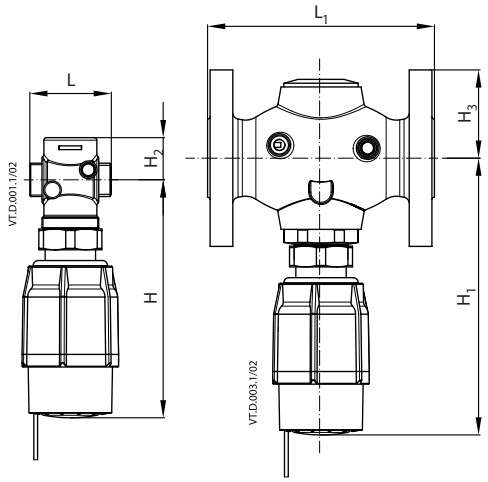


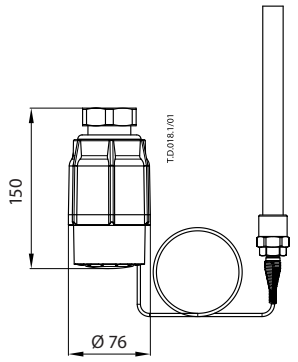


*AVT*

| DN | L | $L_1$ | H | $H_1$ | $H_2$ | $H_3$ |
|---|---|---|---|---|---|---|
| | mm | | | | | |
| 15 | 65 | 130 | 180 | 229 | 34 | 47 |
| 20 | 70 | 150 | 180 | 229 | 34 | 52 |
| 25 | 75 | 160 | 180 | 229 | 37 | 57 |
| 32 | 100 | 180 | 221 | 221 | 62 | 70 |
| 40 | 110 | 200 | 221 | 221 | 62 | 75 |
| 50 | 130 | 230 | 221 | 221 | 62 | 82 |

***Note:*** *other flange dimensions - see table for tailpieces*

| **Type** | | Weight |
|---|---|---|
| sensor 170 mm | kg | 1.3 |
| sensor 210 mm | | 1.5 |
| sensor 255 mm | | 1.6 |

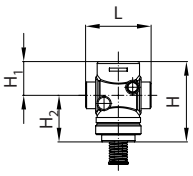


*VG DN 15-25*

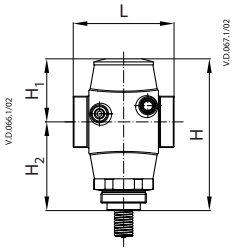


*VG DN 32-50*

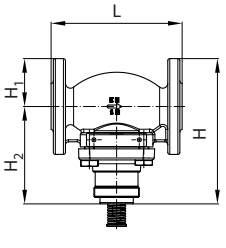


*VGF DN 15-25*

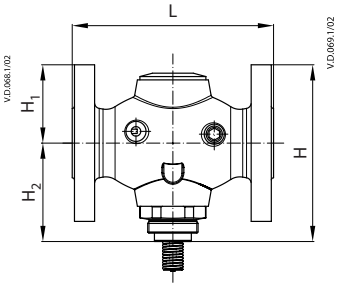


*VGF DN 32-50*

*VG*

| DN | L | H | H1 | H2 | Weight (kg) |
|---|---|---|---|---|---|
| | mm | | | | |
| 15 | 65 | 80 | 34 | 46 | 0.7 |
| 20 | 70 | 80 | 34 | 46 | 0.8 |
| 25 | 75 | 83 | 37 | 46 | 0.9 |
| 32 | 100 | 151 | 63 | 88 | 3.0 |
| 40 | 110 | 151 | 63 | 88 | 3.1 |
| 50 | 130 | 151 | 63 | 88 | 3.8 |

*VGF*

| DN | L | H | H1 | H2 | Weight (kg) |
|---|---|---|---|---|---|
| | mm | | | | |
| 15 | 130 | 144 | 48 | 96 | 3.3 |
| 20 | 150 | 149 | 53 | 96 | 4.1 |
| 25 | 160 | 154 | 58 | 96 | 4.7 |
| 32 | 180 | 158 | 70 | 88 | 7.5 |
| 40 | 200 | 163 | 75 | 88 | 9.0 |
| 50 | 230 | 171 | 83 | 88 | 11.1 |

***Note****: other flange dimensions - see table for tailpieces*


© Danfoss | 2020.08

**Dimensions** *(continuous)*

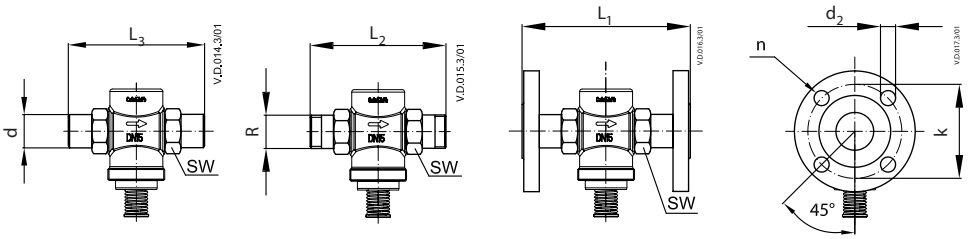


| DN | R [1] | SW | d | $L_1$ [2] | $L_2$ | $L_3$ | k | $d_2$ | n |
|---|---|---|---|---|---|---|---|---|---|
| | | mm | | | | | | | |
| 15 | ½ | 32 (G ¾A) | 21 | 130 | 131 | 139 | 65 | 14 | 4 |
| 20 | ¾ | 41 (G 1A) | 26 | 150 | 144 | 154 | 75 | 14 | 4 |
| 25 | 1 | 50 (G 1¼A) | 33 | 160 | 160 | 159 | 85 | 14 | 4 |
| 32 | 1¼ | 63 (G 1¾A) | 42 | - | 177 | 184 | 100 | 18 | 4 |
| 40 | 1 ½ | 70 (G 2A) | 47 | - | 195 | 204 | 110 | 18 | 4 |
| 50 | 2 | 82 (G 2½A) | 60 | - | 252 | 234 | 125 | 18 | 4 |

*[1] Conical ext. thread acc. to EN 10226-1*
*[2] Flanges PN 25, acc. to EN 1092-2*

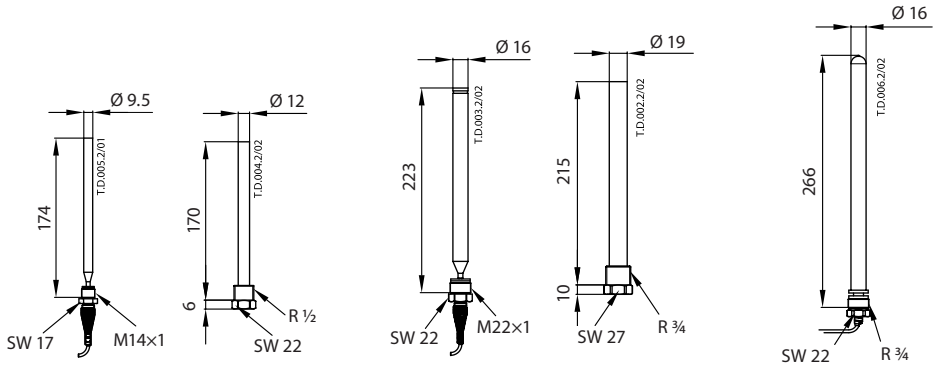


*AVT 170* | *AVT 170 Immersion pocket* | *AVT 210* | *AVT 210 Immersion pocket* | *AVT 255*

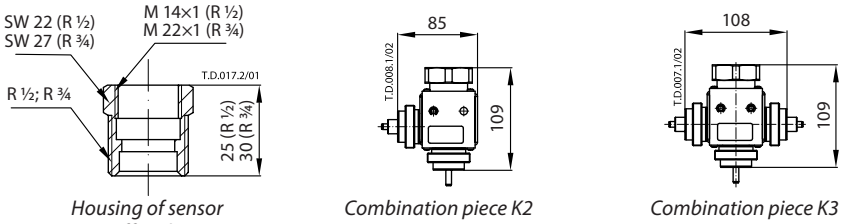


*Housing of sensor stuffing box* | *Combination piece K2* | *Combination piece K3*

ENGINEERING
**TOMORROW**

**Data sheet**

# Temperature controller for steam (PN 25)

## **AVT/VGS** - external thread

### Description

DIN Geprüft TR(TW)700

The AVT/VGS controller is a self-acting proportional temperature controller developed primarily for steam or hot water applications for temperatures up to 200 °C. Controller closes on rising temperature.

The controller has a control valve VGS, thermostatic actuator and handle for temperature setting. Thermostatic actuator consist of bellows, capillary tube and sensor.

The temperature controller is type-tested according to EN 14597 and can be used in combinations with safety temperature monitors STM and safety temperature limiters STL.

**Main data:**

- DN 15-25
- $k_{VS}$ 1.0-6.3 $m^3/h$
- PN 25
- Setting ranges:
  –10… 40 °C/20… 70 °C/40… 90 °C/60 …110 °C
  and
  10… 45 °C/35… 70 °C/60… 100 °C/85… 125 °C
- Temperature:
  - Steam/circ. water/glycolic water up to 30%: 2… 200 °C
- Connections:
  - Ext. thread (weld-on, thread and flange tailpieces)
  - Flow and return mounting.

### Ordering

*Example:*
*Temperature controller for steam, DN 15; $k_{VS}$ 1.6; PN 25; setting range 40… 90 °C; $T_{max}$ 200 °C; ext. thread*

- *1× VGS DN 15 valve*
  *Code No:* ***065B0787***
- *1× AVT thermostatic actuator, 40… 90 °C*
  *Code No:* ***065-0602***

*Option:*
- *1× Weld-on tailpieces*
  *Code No:* ***003H6908***

*The valve will be delivered (assembled) together with an adapter M34 × M45.*

**VGS** Valve [1)]

| Picture | DN (mm) | $k_{VS}$ ($m^3/h$) | Connection | | Code No. |
|---|---|---|---|---|---|
| 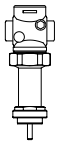 | 15 | 1.0 | Cylindrical external thread acc. to ISO 228/1 | G ¾ A | **065B0786** |
| | | 1.6 | | | **065B0787** |
| | | 3.2 | | | **065B0788** |
| | 20 | 4.5 | | G 1 A | **065B0789** |
| | 25 | 6.3 | | G 1¼ A | **065B0790** |

*1) Adapter M34 × M45 for connection to AVT thermostat is factory assembled on the valve.*
*(info: Adapter M34 × M30 for connection to AMV(E) electrical actuators is part of the valve delivery too.)*

**AVT** Thermostatic actuator

| Picture | For valves | Setting range (°C) | Temperature sensor with brass immersion pocket, length, connection | Code No. |
|---|---|---|---|---|
| 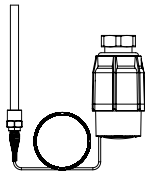 | DN 15-25 | –10… +40 | 210 mm, R ¾ [1)] | **065-0600** |
| | | 20… 70 | | **065-0601** |
| | | 40… 90 | | **065-0602** |
| | | 60… 110 | | **065-0603** |
| | | 10… 45 | 255 mm, R ¾ [1) 2)] | **065-0604** |
| | | 35… 70 | | **065-0605** |
| | | 60… 100 | | **065-0606** |
| | | 85… 125 | | **065-0607** |

*1) conic male thread EN 10226-1*
*2) without immersion pocket*

**Ordering** *(continuous)*

**Accessories** for valves

| Picture | Type designation | DN | Connection | | Code No. |
|---|---|---|---|---|---|
| | Weld-on tailpieces | 15 | - | | **003H6908** |
| | | 20 | | | **003H6909** |
| | | 25 | | | **003H6910** |
| | External thread tailpieces | 15 | Conical ext. thread acc. to EN 10226-1 | R ½ | **003H6902** |
| | | 20 | | R ¾ | **003H6903** |
| | | 25 | | R 1 | **003H6904** |
| 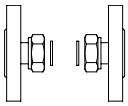 | Flange tailpieces | 15 | Flanges PN 25, acc. to EN 1092-2 | | **003H6915** |
| | | 20 | | | **003H6916** |
| | | 25 | | | **003H6917** |

**Accessories** for thermostats

| Picture | Type designation | PN | Material | Code No. |
|---|---|---|---|---|
| 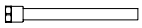 | Immersion pocket | 25 | Brass | **065-4416** [1] |
| | | | Stainless steel, mat. No. 1.4435 | **065-4417** [1] |
| | Adapter [2] | | M34 × 1.5 mm/M45 × 1.5 mm | **003H6927** |
| 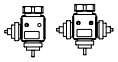 | Combination piece K2 | | | **003H6855** |
| | Combination piece K3 | | | **003H6856** |

[1] *Not for AVT thermostatic actuator code numbers:* ***065-0604***, ***065-0605***, ***065-0606***, ***065-0607***
[2] *Adapter for VGS combinations with thermostatic actuators AVT, temperature monitors STM and temperature limiters STL*

**Service kits**

| Picture | Type designation | for valves DN | $k_{VS}$ | Code No. |
|---|---|---|---|---|
| 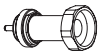 | Valve body extension with stuffing box | 15 | 3.2 | **003H6877** |
| | | 20 | 4.5 | |
| | | 25 | 6.3 | |
| | Housing of sensor stuffing box | **for sensors** | | **Code No.** |
| | | AVT R ¾ | | **065-4421** |


© Danfoss | 2017.07

## Technical data

### Valves

| Nominal diameter | DN | 15 | | | 20 | 25 |
|---|---|---|---|---|---|---|
| $k_{VS}$ value | $m^3/h$ | 1.0 | 1.6 | 3.2 | 4.5 | 6.3 |
| Stroke | mm | 3 | | | 5 | |
| Control ratio | | >1:50 | | | | |
| Control characteristic | | linear | | | | |
| Cavitation factor z | | ≥ 0.6 | | | | ≥ 0.55 |
| Leakage acc. to standard IEC 534 | % of $k_{VS}$ | ≤ 0.05 | | | | |
| Nominal pressure | PN | 25 | | | | |
| Max. differential pressure | bar | 10 | | | | |
| Media | | Steam/Circulation water/glycolic water up to 30% | | | | |
| Media pH | | Min. 7, max. 10 | | | | |
| Media temperature | °C | 2… 200 | | | | |
| Connections – valve | | External thread | | | | |
| Connections – tailpieces | | Weld-on, external thread and flange | | | | |
| **Materials** | | | | | | |
| Valve body | | Red bronze CuSn5ZnPb (Rg5) | | | | |
| Valve seat | | Stainless steel, mat. No. 1.4571 | | | | |
| Valve cone | | Stainless steel, mat. No. 1.4122 | | | | |
| Pressure relieve system | | Bellows | | | | |

### Thermostatic actuator

| | | |
|---|---|---|
| Setting range $X_s$ | °C | –10… 40/20… 70/40… 90/60… 110<br>10… 45/35… 70/60… 100/85… 125 |
| Time constant T acc. to EN 14597 | s | max. 50 (210 mm), max. 30 (255 mm) |
| Gain $K_s$ | mm/°K | 0.3 (210 mm), 0.7 (255 mm) |
| Max. adm. temperature at sensor | | 50 °C above maximum setpoint |
| Max. amb. temperature at thermostat | °C | 0… 70 |
| Nominal pressure sensor | PN | 25 |
| Nominal pressure immersion pocket | PN | 25 |
| Capillary tube length | | 5 m (210 mm), 4 m (255 mm) |
| **Materials** | | |
| Temperature sensor | | Cooper |
| Immersion pocket [1] – Ms design | | Brass, nickel-plated |
| Immersion pocket [1] – Stainless steel design | | Mat. No. 1.4435 (210 mm) |
| Handle for temp. setting | | Polyamide, glass fiber-reinforced |
| Scale carrier | | Polyamide |

[1] *for sensor 210 mm*

## Application principles

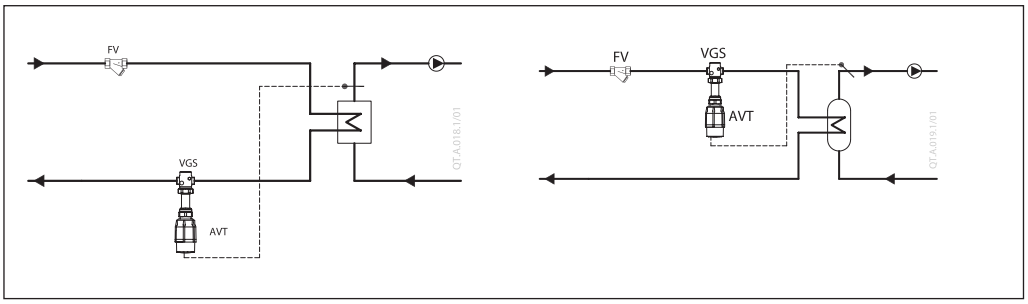

## Combinations

*Example:*
*Temperature controller with safety temperature monitor for steam, DN 15, $k_{VS}$ 1.6, PN 25, setting range 40… 90 °C, $T_{max}$ 200 °C, ext. thread*

- *1× VGS DN 15 valve*
  *Code No: 065B0787*
- *1× AVT thermostatic actuator, 40… 90 °C*
  *Code No:* ***065-0602***
- *1× STM thermostat, 30… 110 °C*
  *Code No:* ***065-0608***
- *1× K2 combination piece*
  *Code No:* ***003H6855***

*Products will be delivered seperatly.*

***Note:***
*For safety temperature monitor STM/VGS data and safety temperature limiter STLS data see relevant data sheet*

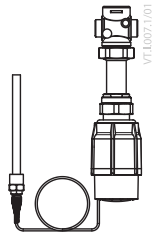


*AVT/VGS*
*- temperature controller*

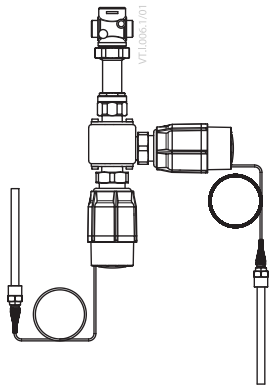


*AVT/AVT/VGS*
*- two temperature controllers*

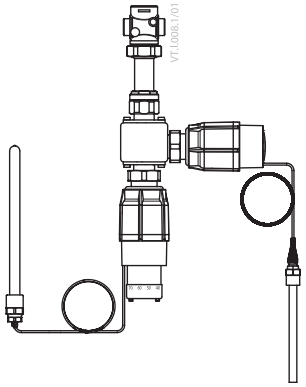


*STM/AVT/VGS*
*- temperature controller with safety temperature monitor for steam*

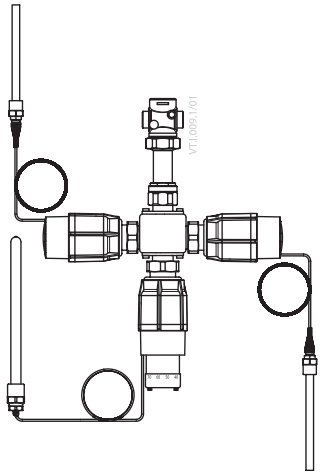


*STM/AVT/AVT/VGS*
*- two temperature controllers with safety temperature monitor for steam*

## Installation positions

*Temperature controller*
Up to media temperature of 160 °C the controllers AVT / VGS can be installed in any position.

For higher temperatures the controllers AVT / VGS have to be installed horizontal and in horizontal pipes with the actuator oriented downwards.

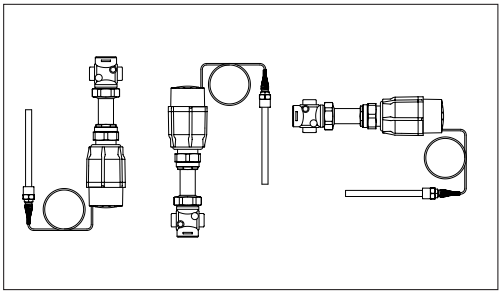

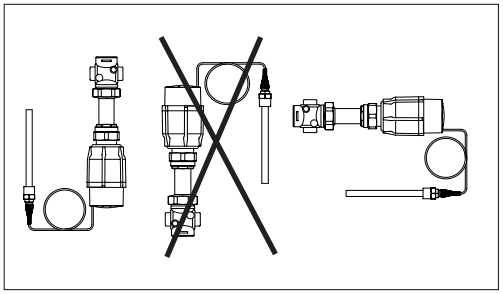


© Danfoss | 2017.07

**Installation positions**
*(continuous)*

*Temperature sensor*
The place of installation must be chosen in a way that the temperature of the media is directly taken without any delay. Avoid overheating of temperature sensor. The temperature sensor must be immersed into the media in its full length.

*Temperature sensor 210 mm R¾"*:
- The temperature sensor may be installed in any position.

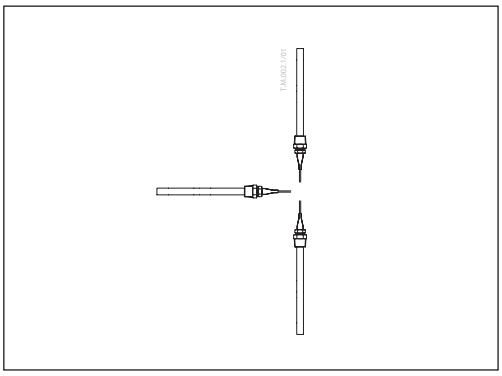


*Temperature sensor 255 mm R¾"*:
- The temperature sensor must be installed as shown on the picture.

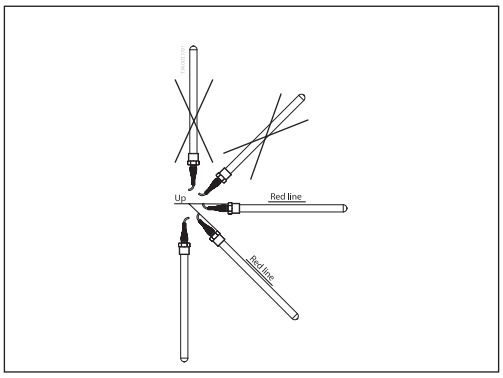


**Pressure temperature diagram**

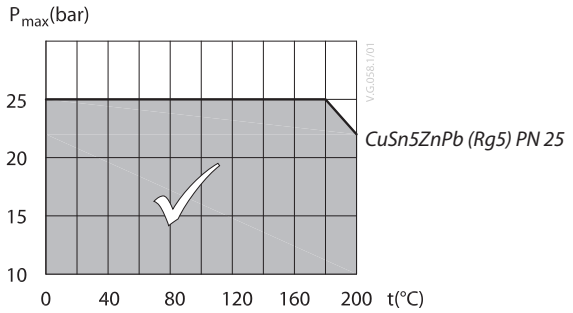


*Maximum allowed operating pressure as a function of media temperature (according to EN 1092-3).*

## Valve sizing

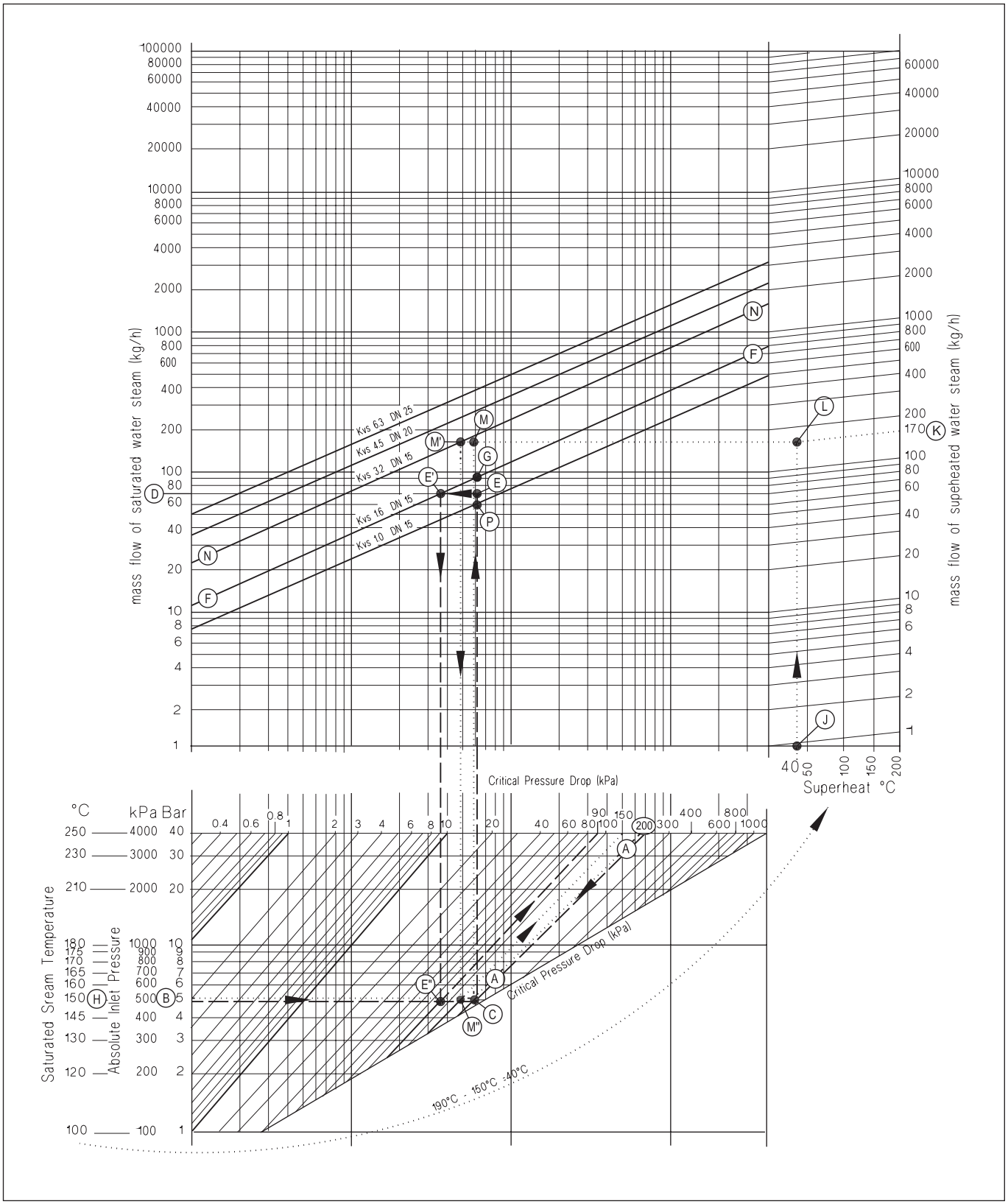


Steam valve sizing is based on 40% drop of the steam pressure across the valve when fully open. At this condition the steam is travelling at or close to its critical velocity (approx. 300 m/s) and throttling would occur over the full valve stroke.

If the steam is travelling slower than this, then the first part of the valve stroke would merely increase the velocity of the steam without reducing the volumetric flow.


© Danfoss | 2017.07

**Valve sizing** *(continuous)*

**1. For saturated steam**

*Given data:*
Flow rate: 70 kg/h
Absolute inlet pressure: 5 bar (500 kPa)

***Remark:***
*For this example follow dashed line*

The absolute inlet pressure is 500 kPa. Critical pressure drop (40% of 500 kPa) is 200 kPa. Locate the diagonal line corresponding to the pressure drop of 200 kPa (line A-A).

Read the absolute inlet pressure on the lower left hand scale (point B), and draw a horizontal line across until it meets the pressure drop diagonal A-A at point C.

From this point C extend a vertical line upwards until it meets the horizontal line representing the steam flow of 70 kg/h from point D. The intersection of this is point E.

The nearest diagonal $k_{VS}$ line above this is line F-F with a $k_{VS}$ of 1.6. If the ideal valve size is not available the next largest size should be selected to ensure design flow.

The pressure drop through valve at the flow rate is found by the intersection of the 70 kg/h line with F-F (point E') and dropping a vertical line downwards; this actually hits the horizontal line for 500 kPa absolute inlet pressure (point E'') at a pressure drop diagonal of 90 kPa. This is only 18 % of the pressure drop accross the valve and the control quality will not be good until the valve has partially closed. As with all steam valves this compromise is necessary since the next smaller valve would not pass the required flow (maximum flow would be about 60 kg/h; point P).

The maximum flow for the same inlet pressure is found by extending the vertical line (C-E) through point E until it crosses the $k_{VS}$ 1.6 line F-F (point G) and reading off the flow (90 kg/h).

**2. For superheated steam**
*Given data:*
Flow rate: 170 kg/h
Absolute inlet pressure: 5 bar (500 kPa)
Steam temperature: 190 °C

***Remark:***
*For this example follow dotted line*
*The procedure for superheated steam is much the same as for saturated steam, but uses a different flow scale which slightly elevates the readings according to the degree of superheat.*

As before, the diagonal critical pressure drop line A-A is located at 40% of 500 kPa (200 kPa). The horizontal inlet pressure line through point B is now extended to the left to read off the corresponding saturated steam temperature at point H (150 °C). The difference between the saturated steam temperature and the superheated steam temperature is
190 °C – 150 °C = 40 °C (see point J).

The superheated steam flow 170 kg/h is found on the upper right hand scale (point K). From here the diagonal line is followed down until it meets a vertical line from the steam temperature elevation (40 °C, point J) at point L.

As before, the horizontal line through point B is drawn to cut line A-A at point C. The point where the vertical line from point C meets the horizontal line from point L is the operating point (point M). This horizontal line, L-M, is the corrected flow line. The nearest diagonal line above this is line N-N with a $k_{VS}$ 3.2. A vertical line dropped from the intersection of L-M line with line N-N (point M') intersects the 500 kPa absolute inlet pressure line (point M'') at a pressure drop diagonal of about 150 kPa. This is about 30% of the pressure drop accross the valve which will give reasonable control quality (compared to recommended ratio of 40 %).

## Design

1. Valve VGS
2. Valve insert
3. Pressure relieved valve cone
4. Valve stem
5. Valve body extension
6. Union nut
7. Thermostatic actuator AVT
8. Thermostat stem
9. Bellows
10. Setting spring for temperature control
11. Handle for temperature setting, prepared for sealing
12. Scale carrier
13. Capillary tube
14. Flexible protected pipe (only at AVT 255 mm)
15. Temperature sensor
16. Immersion pocket
17. Sensor stuffing box
18. Housing of sensor stuffing box

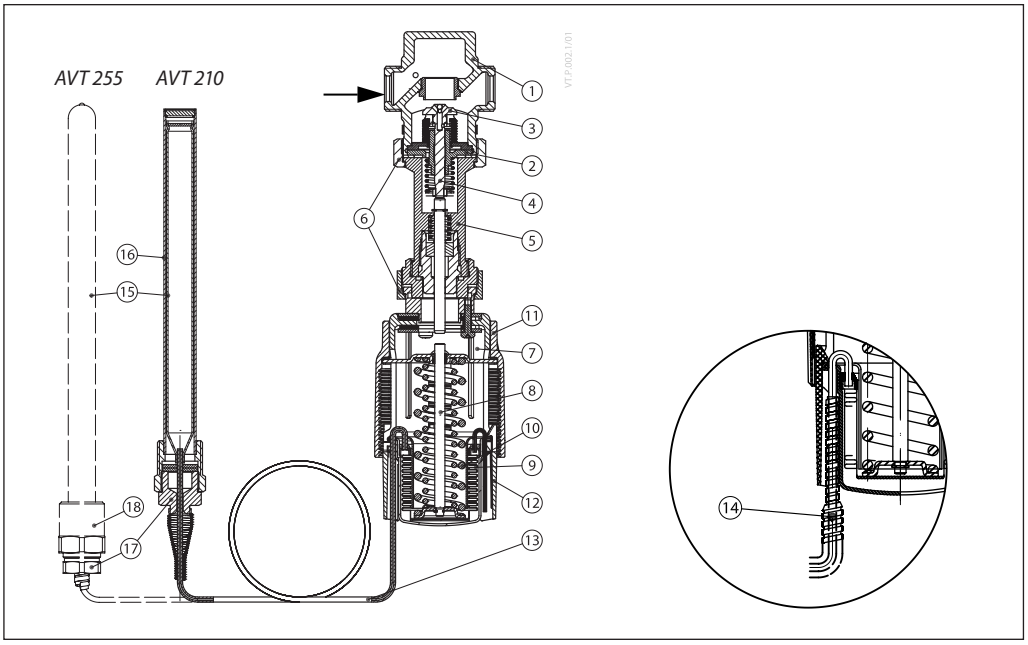


## Function

Media temperature changes cause pressure changes in temperature sensor. Resulting pressure is being transferred through the capillary tube to the bellows. Bellows moves thermostat stem and opens or closes the valve.

By increasing of media temperature valve cone moves towards the seat (valve closes), by decreasing of media temperature valve cone moves away from the seat (valve opens).

Handle for temperature setting can be sealed.

## Settings

*Temperature setting*
Temperature setting is being done by the adjustment of the setting spring for temperature control. The adjustment can be done by means of handle for temperature setting and/or temperature indicators.

## Adjustment diagram

*Temperature setting*
Relation between scale numbers 1-5 and closing temperature.

***Note:*** *The values given are approximate*

*AVT Thermostat ... 210 mm*

| I | II | III | IIII | IIIII | |
|---|---|---|---|---|---|
| -10 | 3 | 15 | 28 | 40 | °C |
| 20 | 33 | 45 | 58 | 70 | |
| 40 | 53 | 65 | 78 | 90 | |
| 60 | 73 | 85 | 98 | 110 | |

*AVT Thermostat ... 255 mm*

| I | II | III | IIII | IIIII | |
|---|---|---|---|---|---|
| 10 | 19 | 28 | 36 | 45 | °C |
| 35 | 44 | 53 | 61 | 70 | |
| 60 | 70 | 80 | 90 | 100 | |
| 85 | 95 | 105 | 115 | 125 | |

***Note:***
*STM Safety temperature monitor (actuator):*
*temperature scale is already written on the product*


© Danfoss | 2017.07

## Dimensions

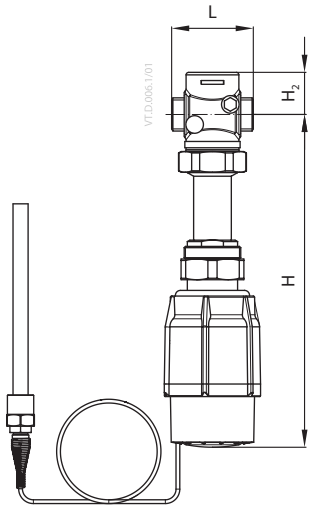


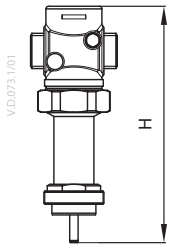


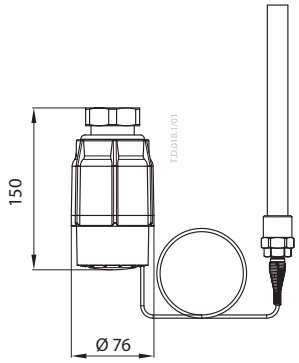


*AVT/VGS*

| DN | L | H | $H_2$ |
|---|---|---|---|
| | mm | | |
| 15 | 65 | 257 | 34 |
| 20 | 70 | 257 | 34 |
| 25 | 75 | 257 | 37 |

*VGS*

| DN | H (mm) | Weight (kg) |
|---|---|---|
| 15 | 178 | 1.3 |
| 20 | 178 | 1.4 |
| 25 | 178 | 1.6 |

*AVT*

| Type | | Weight |
|---|---|---|
| sensor 210 mm | kg | 1.5 |
| sensor 255 mm | | 1.6 |

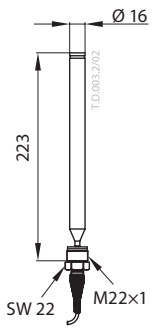


*AVT 210*

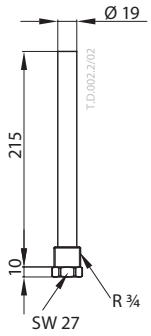


*AVT 210*
*Immersion pocket*

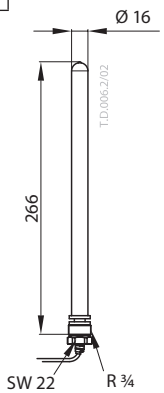


*AVT 255*

**Dimensions** *(continuous)*

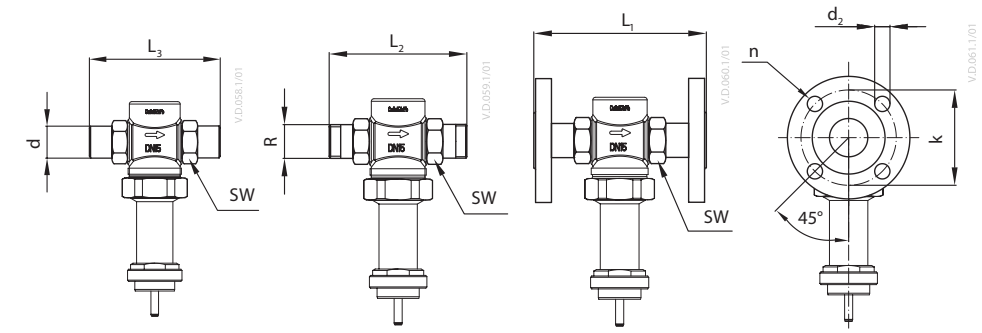


| DN | R [1] | SW | d | $L_1$ [2] | $L_2$ | $L_3$ | k | $d_2$ | n |
|---|---|---|---|---|---|---|---|---|---|
| | | mm | | | | | | | |
| 15 | ½ | 32 (G ¾A) | 21 | 130 | 120 | 139 | 65 | 14 | 4 |
| 20 | ¾ | 41 (G 1A) | 26 | 150 | 131 | 154 | 75 | 14 | 4 |
| 25 | 1 | 50 (G 1¼A) | 33 | 160 | 145 | 159 | 85 | 14 | 4 |

*[1] Conical ext. thread acc. to EN 10226-1*
*[2] Flanges PN 25, acc. to EN 1092-2*

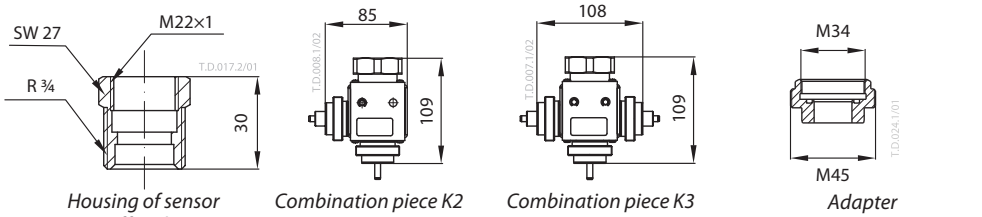


*Housing of sensor stuffing box* | *Combination piece K2* | *Combination piece K3* | *Adapter M34 × 1.5 mm/ M45 × 1.5 mm*


© Danfoss | 2017.07

ENGINEERING
**TOMORROW**

**Data sheet**

# Temperature controller (NC) (PN 25)

## **AVT / VGU** - external thread
## **AVT / VGUF** - flange

### Description

DIN Geprüft TR(TW)700

The AVT / VGU(F) is a self-acting proportional temperature controller developed primarily for cooling applications.

Controller opens on rising temperature.

The controller has a control valve VGU(F), thermostatic actuator and handle for temperature setting. Thermostatic actuator consist of bellows, capillary tube and sensor.

The temperature controller is type-tested according to EN 14597.

**Main data:**
- DN 15-50
- $k_{VS}$ 4.0 -25 $m^3/h$
- PN 25
- Setting ranges:
  –10 … 40 °C / 20 … 70 °C / 40 … 90 °C / 60 … 110 °C
- Temperature:
  - Circ. water / glycolic water up to 30%: 2 … 150 °C
- Connections:
  - Ext. thread (weld-on, thread and flange tailpieces)
  - Flange
- Flow and return mounting.

### Ordering

*Example:*
*Temperature controller for cooling, DN 15; $k_{VS}$ 4.0 ; PN 25; setting range –10 … 40 °C; $T_{max}$ 150 °C; ext. thread*

- *1× VGU DN 15 valve*
  *Code No:* ***065B0791***
- *1× AVT thermostatic actuator, –10 … 40 °C*
  *Code No:* ***065-0596***

*Option:*
- *1× Weld-on tailpieces*
  *Code No:* ***003H6908***

**VGU, VGUF** valve

| Picture | DN (mm) | $k_{VS}$ ($m^3/h$) | Connection | | Code No. |
|---|---|---|---|---|---|
| 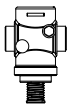 | 15 | 4.0 | Cylindrical external thread acc. to ISO 228/1 | G ¾ A | **065B0791** |
| | 20 | 6.3 | | G 1 A | **065B0792** |
| | 25 | 8.0 | | G 1¼ A | **065B0793** |
| | 32 | 12.5 | | G 1¾ A | **065B0794** |
| | 40 | 16 | | G 2 A | **065B0795** |
| | 50 | 20 | | G 2½ A | **065B0796** |
| 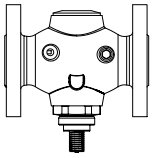 | 32 | 12.5 | Flanges PN 25, acc. to EN 1092-2 | | **065B0797** |
| | 40 | 20 | | | **065B0798** |
| | 50 | 25 | | | **065B0799** |

**Ordering** *(continuous)*

**AVT** thermostatic actuator

| Picture | For valves | Setting range (°C) | Temperature sensor with brass immersion pocket, length, connection | Code No. |
|---|---|---|---|---|
| 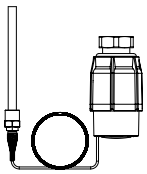 | DN 15-25 | –10 … +40 | 170 mm, R ½ [1] | **065-0596** |
| | | 20 … 70 | | **065-0597** |
| | | 40 … 90 | | **065-0598** |
| | | 60 … 110 | | **065-0599** |
| | DN 32-50 | –10 … +40 | 210 mm, R ¾ [1] | **065-0600** |
| | | 20 … 70 | | **065-0601** |
| | | 40 … 90 | | **065-0602** |
| | | 60 … 110 | | **065-0603** |
| | DN 15-50 | 10 … 45 | 255 mm, R ¾ [1] [2] [3] | **065-0604** |
| | | 35 … 70 | | **065-0605** |
| | | 60 … 100 | | **065-0606** |
| | | 85 … 125 | | **065-0607** |

*[1] conic male thread EN 10226*
*[2] without immersion pocket*
*[3] setting range is for aprox. 5-10 °C higher as stated (see Adjustment diagram section)*

**Accessories** for valves

| Picture | Type designation | DN | Connection | | Code No. |
|---|---|---|---|---|---|
| | Weld-on tailpieces | 15 | - | | **003H6908** |
| | | 20 | | | **003H6909** |
| | | 25 | | | **003H6910** |
| | | 32 | | | **003H6911** |
| | | 40 | | | **003H6912** |
| | | 50 | | | **003H6913** |
| | External thread tailpieces | 15 | Conical ext. thread acc. to EN 10226-1 | R ½ | **003H6902** |
| | | 20 | | R ¾ | **003H6903** |
| | | 25 | | R 1 | **003H6904** |
| | | 32 | | R 1¼ | **003H6905** |
| | | 40 | | R 1½ | **065F6061** |
| | | 50 | | R 2 | **065F6062** |
| 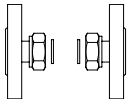 | Flange tailpieces | 15 | Flanges PN 25, acc. to EN 1092-2 | | **003H6915** |
| | | 20 | | | **003H6916** |
| | | 25 | | | **003H6917** |
| | Adapter [1] | | M45 × 1.5 mm / M30 × 1.5 mm | | **003H6928** |

*[1] Adapter for VGU(F) combinations with electrical actuators type AMV(E) 20, 23, 30, 33.*

**Accessories** for thermostats

| Picture | Type designation | PN | For valves | Material | Code No. |
|---|---|---|---|---|---|
|  | Immersion pocket | 25 | DN 15-25 | Brass | **065-4414** [1] |
| | | | | Stainless steel, mat. No. 1.4571 | **065-4415** [1] |
| | | | DN 32-50 | Brass | **065-4416** [1] |
| | | | | Stainless steel, mat. No. 1.4435 | **065-4417** [1] |

*[1] Not for AVT thermostatic actuator code number:* ***065-0604, 065-0605, 065-0606, 065-0607***

**Service kits**

| Picture | Type designation | for sensors | Code No. |
|---|---|---|---|
| | Housing of sensor stuffing box | AVT R ½ | **065-4420** |
| | | AVT R ¾ | **065-4421** |


© Danfoss | 2017.08

## Technical data

### Valves

| Nominal diameter | DN | 15 | 20 | 25 | 32 | 40 | 50 |
|---|---|---|---|---|---|---|---|
| $k_{VS}$ value | $m^3/h$ | 4.0 | 6.3 | 8.0 | 12.5 | 20 | 25 |
| Stroke | mm | 5 | | | | | |
| Control ratio | | >1:50 | | | | | |
| Control characteristic | | linear | | | | | |
| Cavitation factor z | | ≥ 0.6 | | ≥ 0.55 | | ≥ 0.5 | |
| Leakage acc. to standard IEC 534 | % of $k_{VS}$ | ≤ 0.02 | | | ≤ 0.05 | | |
| Nominal pressure | PN | 25 | | | | | |
| Max. differential pressure | bar | 20 | | | 16 | | |
| Medium | | Circulation water / glycolic water up to 30% | | | | | |
| Medium pH | | Min. 7, max. 10 | | | | | |
| Medium temperature | °C | 2 … 150 | | | | | |
| Connections – valve | | External thread | | | External thread and flange | | |
| Connections – tailpieces | | Weld-on and external thread | | | | | |
| Connections – tailpieces | | Flange | | | - | | |
| **Materials** | | | | | | | |
| Valve body | | Red bronze CuSn5ZnPb (Rg5) | | | Ductile iron EN-GJS-400-18-LT (GGG 40.3) | | |
| Valve seat | | Stainless steel, mat. No. 1.4571 | | | | | |
| Valve cone | | Dezincing free brass CuZn36Pb2As | | | | | |
| Sealing | | EPDM | | | | | |
| Pressure relieve system | | Piston | | | | | |

### Thermostatic actuator

| | | |
|---|---|---|
| Setting range $X_s$ | °C | –10 … 40/20 … 70/40 … 90/60 … 110<br>10 … 45/35 … 70/60 … 100/85 … 125 |
| Time constant T acc. to EN 14597 | s | max. 50 (170 mm, 210 mm), max. 30 (255 mm) |
| Gain $K_s$ | mm/°K | 0.2 (170 mm), 0.3 (210 mm), 0.7 (255 mm) |
| Max. adm. temperature at sensor | | 50 °C above maximum setpoint |
| Max. amb. temperature at sensor | °C | 0 … 70 |
| Nominal pressure sensor | PN | 25 |
| Nominal pressure immersion pocket | PN | 25 |
| Capillary tube length | | 5 m (170 mm, 210 mm), 4 m (255 mm) |
| **Materials** | | |
| Temperature sensor | | Cooper |
| Immersion pocket [1] – Ms design | | Brass, nickel-plated |
| Immersion pocket [1] – Stainless steel design | | Mat. No. 1.4571 (170 mm), mat. No. 1.4435 (210 mm) |
| Handle for temp. setting | | Polyamide, glass fiber-reinforced |
| Scale carrier | | Polyamide |

[1] *for sensor 170 and 210 mm*

## Application principles

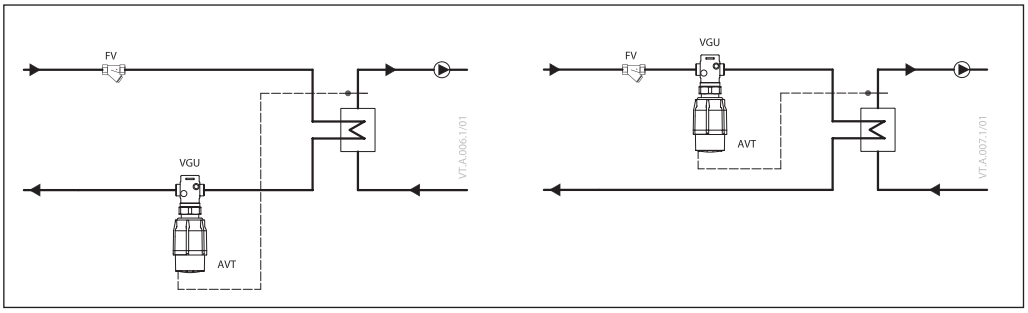

## Installation positions

*Temperature controller*
Temperature controller AVT / VGU(F) can be installed in any position.

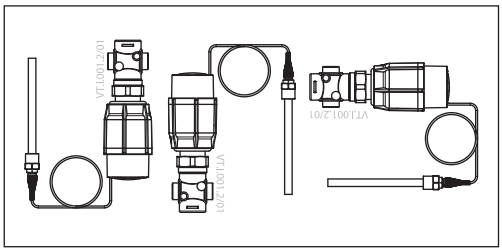

*Temperature sensor*
The place of installation must be chosen in a way that the temperature of the medium is directly taken without any delay. Avoid overheating of temperature sensor. The temperature sensor must be immersed into the medium in its full length.

*Temperature sensors 170 mm R ½ and 210 mm R ¾*
- The temperature sensor may be installed in any position.

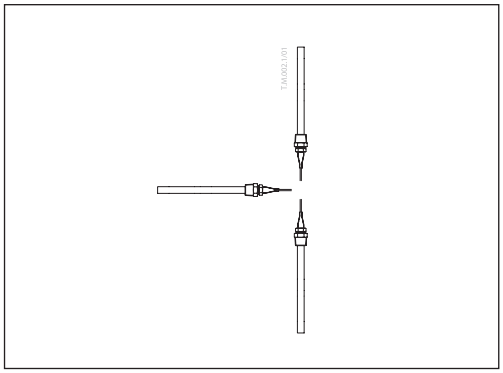

*Temperature sensor 255 mm R ¾*
- The temperature sensor must be installed as shown on the picture.

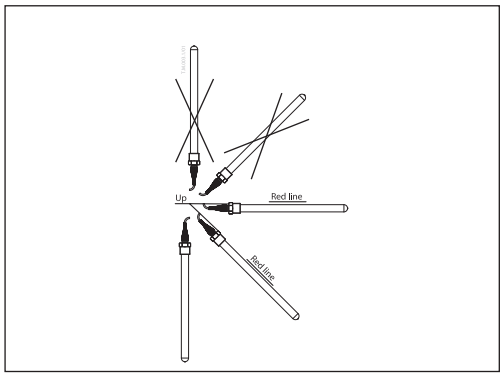


## Pressure temperature diagram

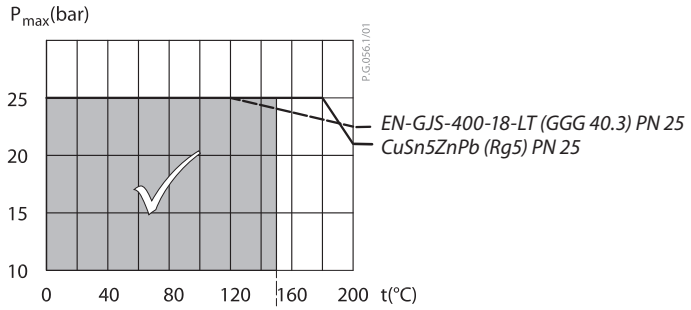


*Maximum allowed operating pressure as a function of medium temperature (according to EN 1092-2 and EN 1092-3).*


© Danfoss | 2017.08

## Valve sizing

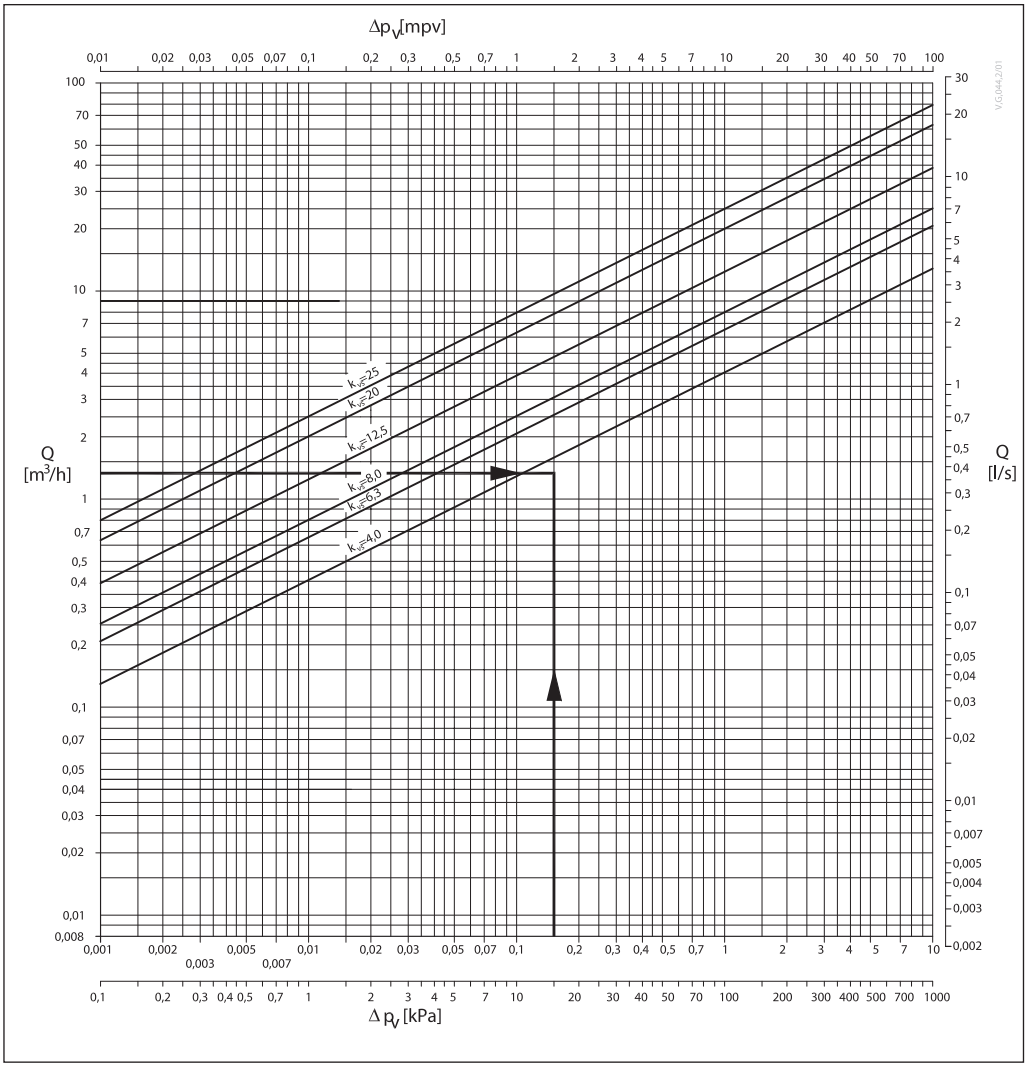


*Given data:*
$P_{max}$ = 10 kW
Δt = 6 K
Δpv = 0.15 bar

$P_{max}$ - cooling power (kW)
Δt - temperature difference (K)
$Δp_v$ - differential pressure across the valve

Maximum flow $Q_{max}$ ($m^3/h$) through the valve is calculated according to formula:

$$Q_{max} = \frac{P_{max} \times 0.86}{\Delta t} = \frac{10 \times 0.86}{6}$$

$Q_{max}$ = 1.43 $m^3/h$

$k_v$ value is calculated according to formula:

$$k_v = \frac{Q_{max}}{\sqrt{\Delta p_V}} = \frac{1.43}{\sqrt{0.15}}$$

$k_v$ = 3.7 $m^3/h$

Chosen $k_{VS}$ = 4.0 $m^3/h$
or
read from the sizing diagram by taking a line through Q scale (1.43 $m^3/h$) and $Δp_v$ scale (0.15 bar) to intersect $k_v$-scale at 3.7 $m^3/h$
Chosen $k_{VS}$ = 4.0 $m^3/h$

*Solution:*
The example selects ext. thread valve VGU DN 15, $k_{VS}$ value 4.0 .

## Design

1. Valve VGU(F)
2. Valve insert
3. Pressure relieved valve cone
4. Valve stem
5. Union nut
6. Thermostatic actuator AVT
7. Thermostat stem
8. Bellows
9. Setting spring for temperature control
10. Handle for temperature setting, prepared for sealing
11. Scale carrier
12. Capillary tube
13. Flexible protected pipe (only at AVT 255 mm)
14. Temperature sensor
15. Immersion pocket
16. Sensor stuffing box
17. Housing of sensor stuffing box

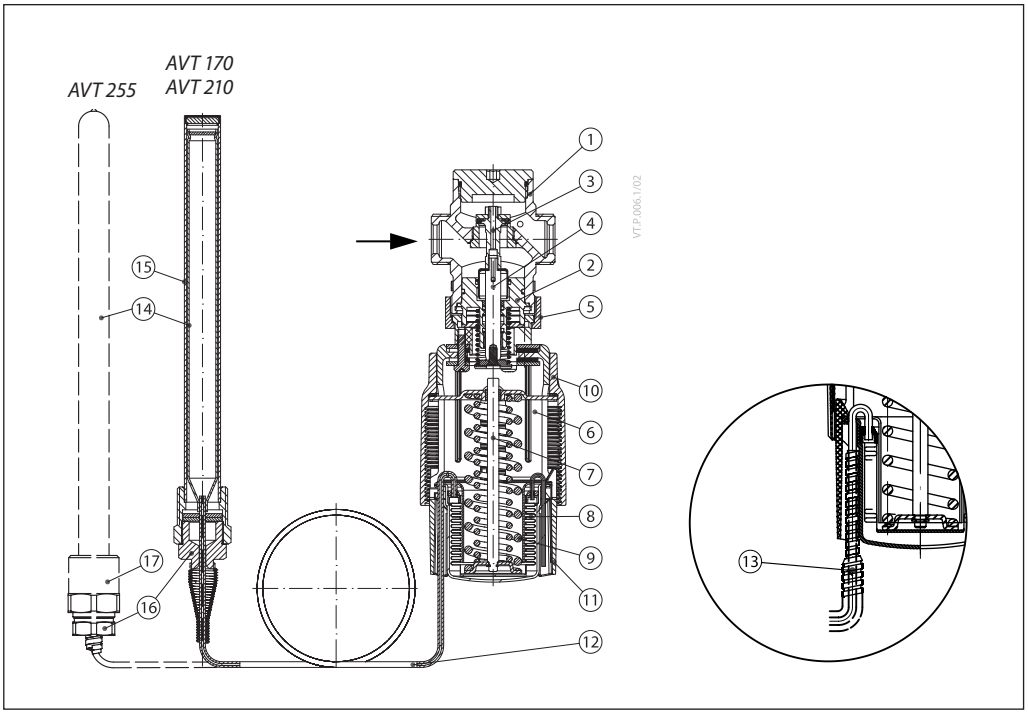


## Function

Medium temperature changes cause pressure changes in temperature sensor. Resulting pressure is being transferred through the capillary tube to the bellows. Bellows moves thermostat stem and opens or closes the valve.

By increasing of medium temperature valve cone moves away the seat (valve opens by decreasing of medium temperature valve cone moves towards from the seat (valve closes).

Handle for temperature setting can be sealed.

## Settings

*Temperature setting*
Temperature setting is being done by the adjustment of the setting spring for temperature control.

The adjustment can be done by means of handle for temperature setting and/or temperature indicators.

## Adjustment diagram

*Temperature setting*
Relation between scale numbers 1-5 and closing temperature.

***Note:*** *The values given are approximate*

*AVT Thermostat ... 170 mm, 210 mm*

| I | II | III | IIII | IIIII | |
|---|---|---|---|---|---|
| -10 | 3 | 15 | 28 | 40 | °C |
| 20 | 33 | 45 | 58 | 70 | |
| 40 | 53 | 65 | 78 | 90 | |
| 60 | 73 | 85 | 98 | 110 | |

*AVT Thermostat ... 255 mm*

| I | II | III | IIII | IIIII | |
|---|---|---|---|---|---|
| 10 | 19 | 28 | 36 | 45 | °C |
| 35 | 44 | 53 | 61 | 70 | |
| 60 | 70 | 80 | 90 | 100 | |
| 85 | 95 | 105 | 115 | 125 | |


© Danfoss | 2017.08

## Dimensions

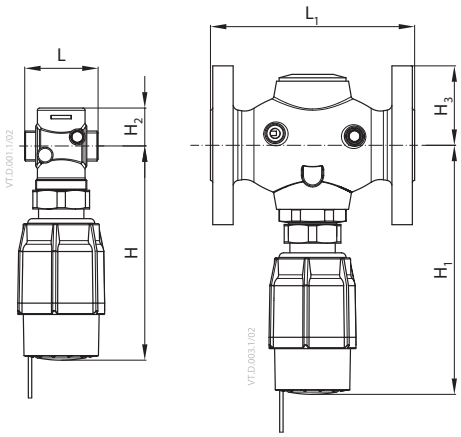


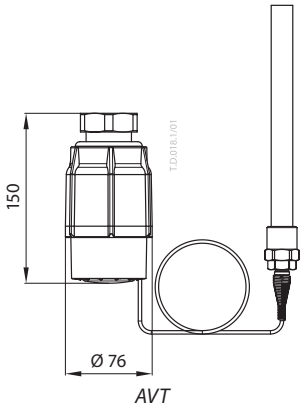


| DN | L | $L_1$ | H | $H_1$ | $H_2$ | $H_3$ |
|---|---|---|---|---|---|---|
| | mm | | | | | |
| 15 | 65 | - | 180 | - | 34 | - |
| 20 | 70 | - | 180 | - | 34 | - |
| 25 | 75 | - | 180 | - | 37 | - |
| 32 | 100 | 180 | 221 | 221 | 63 | 70 |
| 40 | 110 | 200 | 221 | 221 | 63 | 75 |
| 50 | 130 | 230 | 221 | 221 | 63 | 82 |

***Note:*** *other flange dimensions - see table for tailpieces*

| Type | | Weight |
|---|---|---|
| sensor 170 mm | kg | 1.3 |
| sensor 210 mm | | 1.5 |
| sensor 255 mm | | 1.6 |

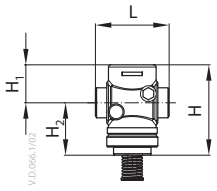


*VGU DN 15-25*

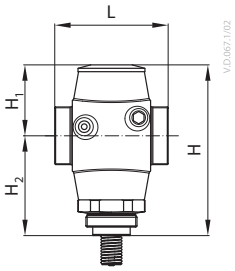


*VGU DN 32-50*

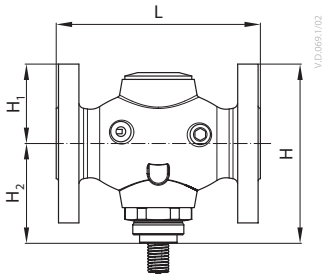


*VGUF DN 32-50*

*VGU*

| DN | L | H | $H_1$ | $H_2$ | Weight (kg) |
|---|---|---|---|---|---|
| | mm | | | | |
| 15 | 65 | 80 | 34 | 46 | 0.7 |
| 20 | 70 | 80 | 34 | 46 | 0.8 |
| 25 | 75 | 83 | 37 | 46 | 0.9 |
| 32 | 100 | 154 | 63 | 91 | 3.2 |
| 40 | 110 | 154 | 63 | 91 | 3.3 |
| 50 | 130 | 154 | 63 | 91 | 4.1 |

*VGUF*

| DN | L | H | $H_1$ | $H_2$ | Weight (kg) |
|---|---|---|---|---|---|
| | mm | | | | |
| 32 | 180 | 158 | 70 | 88 | 7.5 |
| 40 | 200 | 163 | 75 | 88 | 9.0 |
| 50 | 230 | 171 | 83 | 88 | 11.1 |

***Note****: other flange dimensions - see table for tailpieces*

## Dimensions *(continuous)*

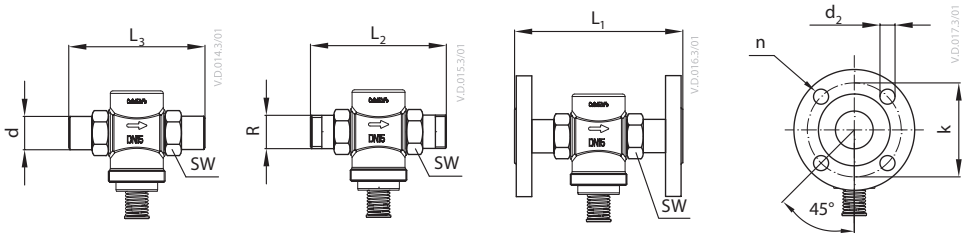


| DN | R [1] | SW | d | $L_1$ [2] | $L_2$ | $L_3$ | k | $d_2$ | n |
|---|---|---|---|---|---|---|---|---|---|
| | | mm | | | | | | | |
| 15 | ½ | 32 (G ¾A) | 21 | 130 | 131 | 139 | 65 | 14 | 4 |
| 20 | ¾ | 41 (G 1A) | 26 | 150 | 144 | 154 | 75 | 14 | 4 |
| 25 | 1 | 50 (G 1¼A) | 33 | 160 | 160 | 159 | 85 | 14 | 4 |
| 32 | - | - | - | - | - | - | 100 | 18 | 4 |
| 40 | - | - | - | - | - | - | 110 | 18 | 4 |
| 50 | - | - | - | - | - | - | 125 | 18 | 4 |

*[1] Conical ext. thread acc. to EN 10226-1*
*[2] Flanges PN 25, acc. to EN 1092-2*

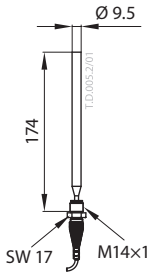


*AVT 170*

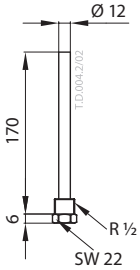


*AVT 170*
*Immersion pocket*

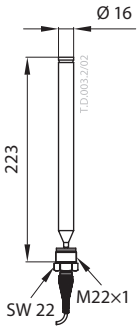


*AVT 210*

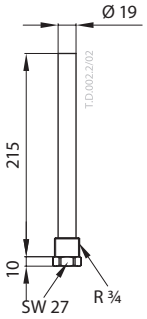


*AVT 210*
*Immersion pocket*

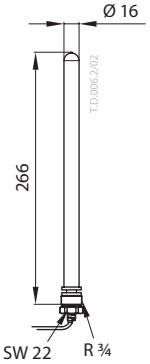


*AVT 255*

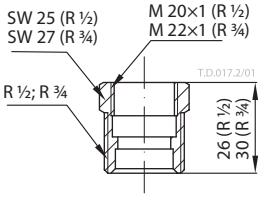


*Housing of sensor*
*stuffing box*

Danfoss can accept no responsibility for possible errors in catalogues, brochures and other printed material. Danfoss reserves the right to alter its products without notice. This also applies to products already on order provided that such alterations can be made without subsequential changes being necessary in specifications already agreed.
All trademarks in this material are property of the respective companies. Danfoss and the Danfoss logotype are trademarks of Danfoss A/S. All rights reserved.

ENGINEERING
TOMORROW

**Data sheet**

# Thermostats AFT 06, AFT 17

## Description

DIN Geprüft TR(TW)761

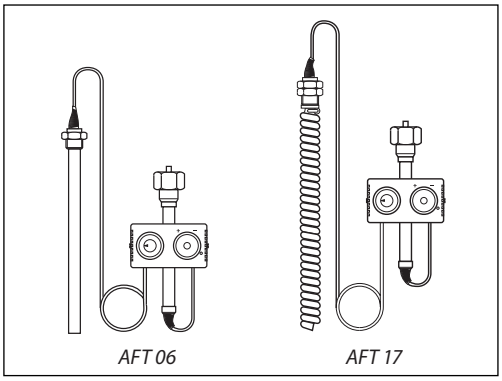


The thermostats operate according to the liquid expansion principle. The set point adjuster is directly fitted to the actuator.

There are two sensor designs with different time constants:
- AFT 06 smooth sensor ~120 sec
- AFT 17 spiral sensor ~20 sec

Temperature control of domestic hot water systems with storage tanks and restriction of the return flow temperature in district heating transfer station are the main fields of application. Combinations: temperature controller, safety temperature monitor type STFW, see page 4.

Type-tested according to EN 14597 in connection with the following valves:
VFG 2, VFG 21, VFGS 2, VFG 33 and VFU 2.

**Main data** (thermostat & valve):
- Setting ranges:
  - AFT 06: -20 ... 50 °C / 20 … 90 °C / 40 … 110 °C / 60 … 130 °C / 110 … 180 °C
  - AFT 17: -20… 50 °C / 20 … 90 °C / 40 … 110 °C / 60 … 130 °C
- Valves: VFG 2, VFG 21, VFGS 2, VFG 33 and VFU
- DN: 15-125
- PN: 16, 25 and 40
- Connection: Flange EN 1092-2

## Ordering

### AFT Thermostat

| Picture | Type | Set-point[1] (°C) | Sensor / time constant [2] | Code No. |
|---|---|---|---|---|
| 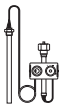 | AFT 06 | –20 … 50 | Sensor with immersion pocket bronze, Ø24×386/120 s | **065-4390** |
| | | 20 … 90 | | **065-4391** |
| | | 40 … 110 | | **065-4392** |
| | | 60 … 130 | | **065-4393** |
| | | 110 … 180 | | **065-4394** |
| 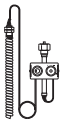 | AFT 17 | –20 … 50 | Spiral sensor, Ø30×500/20 s | **065-4400** |
| | | 20 … 90 | | **065-4401** |
| | | 40 … 110 | | **065-4402** |
| | | 60 … 130 | | **065-4403** |

[1] *Thermostats are proportional controllers, thus certain deviation from set point can be expected and varies from valve DN:*
*AFT../VFG.. closing point can deviate up to +/- 10 %*
*AFT../VFU.. opening point can deviate up to +/- 15 %*
*More details in sizing example on page 3*
[2] *acc. to EN 14597*

### Accessories

| Picture | Type designation | For thermostat | Material | Code No. |
|---|---|---|---|---|
| | Immersion pocket | AFT 06 | Stainless steel mat. No. 1.4571 | **003G1412** |
| | Combination piece KF2 | | | **003G1440** |
| | ZF4 Stem extension | | | **003G1394** |

### Spare parts

| Picture | Type designation | For thermostat | Material | Code No. |
|---|---|---|---|---|
| | Immersion pocket | AFT 06 | Bronze | **003G1399** |

## Technical data

### Thermostat

| Type | | AFT 06 | AFT 17 |
|---|---|---|---|
| Setting range $X_s$ | °C | –20 … 50, 20 … 90, 40 … 110, 60 … 130, 110 … 180 | –20 … 50, 20 … 90, 40 … 110, 60 … 130 |
| Time constant T | s | 120 (with immersion pocket) | 20 (without immersion pocket) |
| Gain $K_s$ | mm/°C | 0.8 | |
| Max. temperature at sensor | | 100 °C above the adjusted set-point | |
| Max. amb. temperature | °C | 0 … 70 | |
| Nominal pressure sensor | PN | 40 | |
| Nominal pressure immersion pocket | PN | 40 | |
| Capillary tube length | m | 5 | |
| **Materials** | | | |
| Temperature sensor | | Smooth sensor Ø24 × 386 | Spiral sensor Ø30 × 500 |
| Sensor medium | | Silicon oil | |
| Sensor material | | Brass, bronze | Cu spiral, nickel-plated |
| Immersion pocket material | | Nickel-plated | No immersion pocket |
| Immersion pocket material | | Stainless steel Mat. No. 1.4571 | No immersion pocket |
| Weight | kg | 3.0 | 3.5 |

### Valves

| Nominal diameter | DN | 15 | 20 | 25 | 32 | 40 | 50 | 65 | 80 | 100 | 125 |
|---|---|---|---|---|---|---|---|---|---|---|---|
| $k_{VS}$ value | $m^3/h$ | 4 | 6.3 | 8 | 16 | 20 | 32 | 50 | 80 | 125 | 160 |

## Application principles

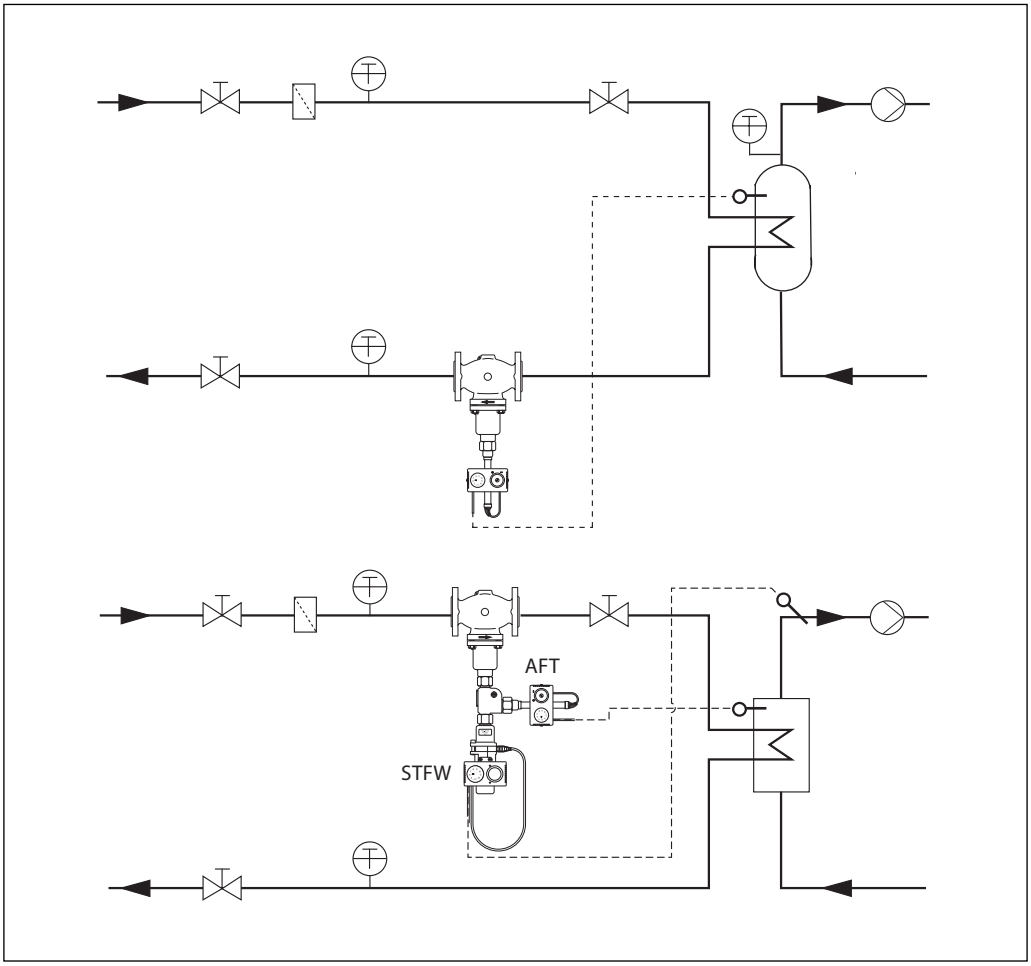



© Danfoss | 2022.01

## Sizing

To get the valve DN two parameters are needed:
1. the system $k_v$ and
2. the acceptable temperature deviation Xp.

*Given data:*

| | |
|---|---|
| Capacity: | 600 kW |
| Hot water temperature: | 50 °C |
| Primary temperature difference ΔT: | 40 °C |
| Differential pressure ΔPv: | 0.8 bar |

Flow as data or calculated:

$$\text{Flow} = \frac{\text{Capacity (kW)}}{\text{Primary temp. diff. (°C)}} 0.86 = \frac{600}{40} 0.86 = 12.9\,\text{m}^3/\text{h}$$

1. The system $k_v$ can be calculated or read from a graph.

$$k_v = \frac{\text{Flow (m}^3/\text{h)}}{\sqrt{\text{Diff. presure (bar)}}} = \frac{12.9}{\sqrt{0.8}} = 14.4\,\text{m}^3/\text{h}$$

   $k_v$ readout from a graph:
   from the Q scale ① draw a straight line through a Δp ② to a $k_v$ scale ③.
2. The acceptable temperature deviation:
   From the needed $k_v$ draw a horizontal line ④ over the graph. Choose the acceptable temperature deviation and read the valve DN below the reading ⑤.

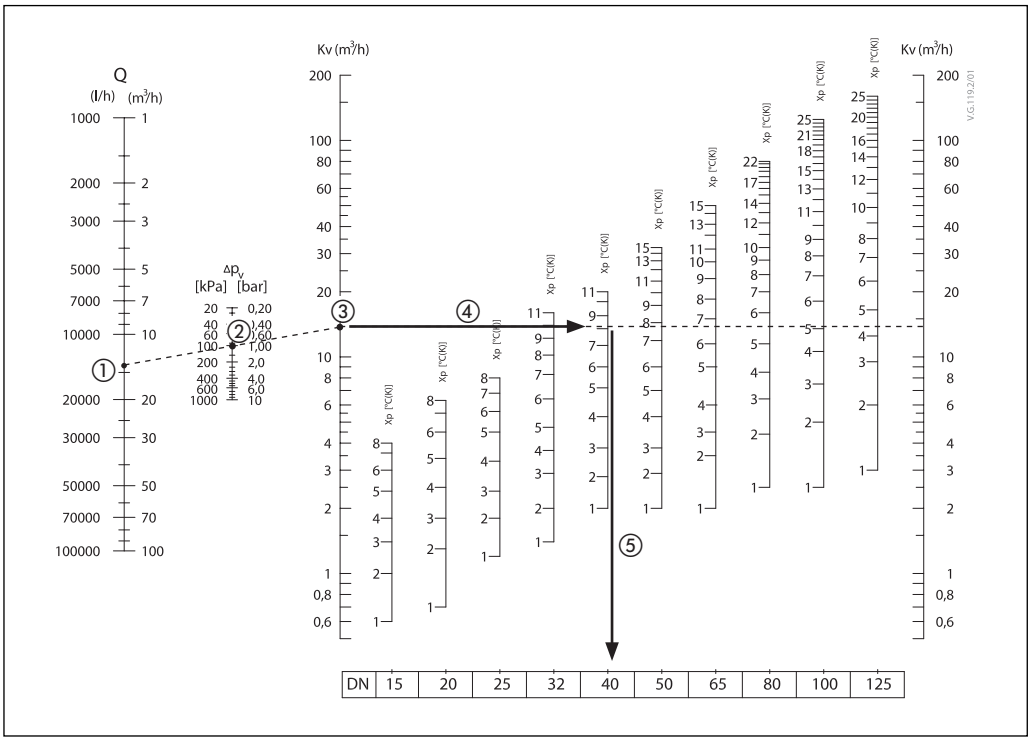


**Example:**
Xp = 8 °C –>DN 40, AFT 20 … 90 °C, setting 50 °C

**VFG:**
The sensor has:
a) 50 °C: the valve is **fully closed**
b) 50 °C–Xp=42 °C: the valve is max. opened

**VFU:**
The sensor has:
a) 50 °C: the valve **starts opening**
b) 50 °C+Xp=58 °C: the valve is max. opened

## Design

1. Valve body
2. Valve seat
3. Trim
4. Bonnet
5. Sensor
6. Set- point adjuster

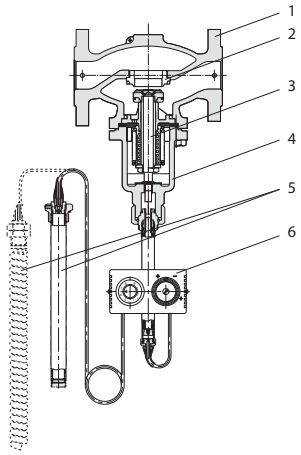


*Sensor: AFT 06, AFT 17*
*Valve: VFG2, VFG 21, VFU 2, VFGS 2, VFG 33*

## Combinations

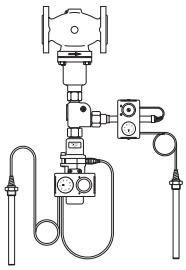

*AFT.. / STFW / VFG*

| | 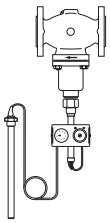 | 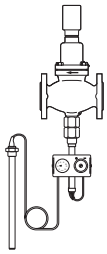 | 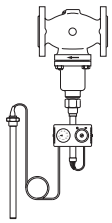 | 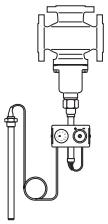 |
|---|---|---|---|---|
| **Valve type** | **VFG 2/21** | **VFU 2** | **VFGS 2** | **VFG 33** |
| DN | 15-125 | 15-125 | 15-125 | 25-125 |
| Medium | Water | | Steam | Water |
| Max. temp. (°C) | 200 (VFG 2)<br>150 (VFG 21) | 200 | 200<br>350 (with ZF4) | 200<br>350 (with ZF4) |
| PN | 16, 25, 40 | | | 25 |
| Remark | NO valve | NC valve | Steam valve | 3-way valve<br>mixing valve |

## Dimensions

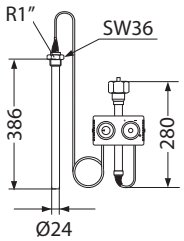


*AFT 06*

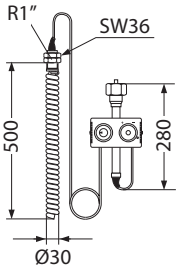


*AFT 17*

## Accessories

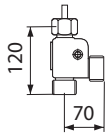


*Comb. piece KF2*

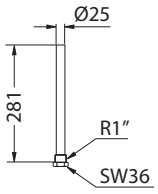


*Stainless steel*

**Danfoss A/S**
Climate Solutions • danfoss.com • +45 7488 2222

Any information, including, but not limited to information on selection of product, its application or use, product design, weight, dimensions, capacity or any other technical data in product manuals, catalogues descriptions, advertisements, etc. and whether made available in writing, orally, electronically, online or via download, shall be considered informative, and is only binding if and to the extent, explicit reference is made in a quotation or order confirmation. Danfoss cannot accept any responsibility for possible errors in catalogues, brochures, videos and other material.
Danfoss reserves the right to alter its products without notice. This also applies to products ordered but not delivered provided that such alterations can be made without changes to form, fit or function of the product.
All trademarks in this material are property of Danfoss A/S or Danfoss group companies. Danfoss and the Danfoss logo are trademarks of Danfoss A/S. All rights reserved.

ENGINEERING
**TOMORROW**

**Data sheet**

# Temperature controller AVT with safety temperature monitor STM/VG(F) (PN25)

## Description

DIN Geprüft TR(TW)700

DIN Geprüft STW871

*STM / VGF*

STM/VG(F) and STM/AVT/VG(F) are self-acting proportional temperature controllers used for temperature control and temperature monitoring of drinking water, water and water glycol mixtures for heating and district heating systems.

VG - valve with external thread
VGF - valve with flange

Controller closes on rising temperature.

The controllers are:
- Type-tested acc. to EN 14597 and protect against exceeding temperatures:
  Applications:
  - District heating systems acc. to DIN 4747
  - Heating systems acc. to EN 12828 (DIN 4751) and EN 12953-6 (DIN 4752)
  - Water heating systems for drinking and industrial waters acc. to DIN 4753

**Main data:**
- DN 15-50
- $k_{VS}$ 0.4 -25 $m^3/h$
- PN 25
- Setting ranges:
  - STM monitor:
    20 … 75 °C / 40 … 95 °C / 30 … 110 °C
  - AVT thermostatic actuator:
    –10 … 40 °C / 20 … 70 °C /
    40 … 90 °C / 60 … 110 °C
    and
    10 … 45 °C / 35 … 70 °C /
    60 … 100 °C / 85 … 125 °C
- Temperature:
  - Circ. water/glycolic water up to 30 %:
    2 … 150 °C
- Connections:
  - Ext. thread (weld-on, thread and flange tailpieces)
  - Flange
- Flow and return mounting

## Ordering

*Example 1 -* ***STM / VG(F)*** *controller:*
*Safety temperature monitor;*
*DN 15; $k_{VS}$ 1.6 , PN 25;*
*limit range 30 …110 °C;*
*$T_{max}$ 150 °C; ext. thread*

- *1× VG DN 15 valve*
  *Code No:* ***065B0772***
- *1× STM monitor, 30 … 110 °C*
  *Code No:* ***065-0608***

*Option:*
- *1× Weld-on tailpieces*
  *Code No:* ***003H6908***

*All products will be delivered separately.*

**VG, VGF** valve

| Picture | DN (mm) | $k_{VS}$ ($m^3/h$) | Connection | | Code No. |
|---|---|---|---|---|---|
| 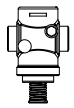 | 15 | 0.4 | Cylindrical external thread acc. to ISO 228/1 | G ¾ A | **065B0770** |
| | | 1.0 | | | **065B0771** |
| | | 1.6 | | | **065B0772** |
| | | 2.5 | | | **065B0773** |
| | | 4.0 | | | **065B0774** |
| | 20 | 6.3 | | G 1 A | **065B0775** |
| | 25 | 8.0 | | G 1 ¼ A | **065B0776** |
| | 32 | 12.5 | | G 1 ¾ A | **065B0777** |
| | 40 | 16 | | G 2 A | **065B0778** |
| | 50 | 20 | | G 2 ½ A | **065B0779** |
| 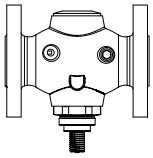 | 15 | 4.0 | Flanges PN 25, acc. to EN 1092-2 | | **065B0780** |
| | 20 | 6.3 | | | **065B0781** |
| | 25 | 8.0 | | | **065B0782** |
| | 32 | 12.5 | | | **065B0783** |
| | 40 | 20 | | | **065B0784** |
| | 50 | 25 | | | **065B0785** |

## Ordering *(continuous)*

*Example 2-* **STM/AVT/ VG(F)** *controller:*
*Temperature controller with safety temperature monitor; DN 15, $k_{VS}$ 1.6 ; PN 25; limit range 30 … 110 °C; setting range 40 … 90 °C; $T_{max}$ 150 °C; ext. thread*

- *1× VG DN 15 valve*
  *Code No:* ***065B0772***
- *1× STM monitor, 30 … 110 °C*
  *Code No:* **065-0608**
- *1x AVT thermostatic actuator, 40 … 90 °C*
  *Code No:* ***065-0598***
- *1× K2 Combination piece*
  *Code No:* **003H6855**

*Option:*
- *1× Weld-on tailpieces*
  *Code No:* **003H6908**

*All products will be delivered separately.*

### **STM** Safety temperature monitor (actuator)

| Picture | For valves | Limit range (°C) | Temperature sensor with brass immersion pocket, length, connection | Code No. |
|---|---|---|---|---|
| 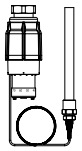 | DN 15-50 | 30 … 110 | 210 mm, R ¾ [1] | **065-0608** |
| | | 20 … 75 | | **065-0609** |
| | | 40 … 95 | | **065-0610** |

[1] *conic male thread EN 10226-1*

### **AVT** Thermostatic actuator

| Picture | For valves | Setting range (°C) | Temperature sensor with brass immersion pocket, length, connection | Code No. |
|---|---|---|---|---|
| 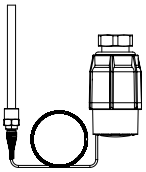 | DN 15-25 | –10 … +40 | 170 mm, R ½ [1] | **065-0596** |
| | | 20 … 70 | | **065-0597** |
| | | 40 … 90 | | **065-0598** |
| | | 60 … 110 | | **065-0599** |
| | DN 32-50 | –10 … +40 | 210 mm, R ¾ [1] | **065-0600** |
| | | 20 … 70 | | **065-0601** |
| | | 40 … 90 | | **065-0602** |
| | | 60 … 110 | | **065-0603** |
| | DN 15-50 | 10 … 45 | 255 mm, R ¾ [1] [2] | **065-0604** |
| | | 35 … 70 | | **065-0605** |
| | | 60 … 100 | | **065-0606** |
| | | 85 … 125 | | **065-0607** |

[1] *conic male thread EN 10226-1*
[2] *without immersion pocket*

### **Accessories** for valves

| Picture | Type designation | DN | Connection | | Code No. |
|---|---|---|---|---|---|
| | Weld-on tailpieces | 15 | - | | **003H6908** |
| | | 20 | | | **003H6909** |
| | | 25 | | | **003H6910** |
| | | 32 | | | **003H6911** |
| | | 40 | | | **065B2006** |
| | | 50 | | | **065B2007** |
| | External thread tailpieces | 15 | Conical ext. thread acc. to EN 10226-1 | R ½ | **003H6902** |
| | | 20 | | R ¾ | **003H6903** |
| | | 25 | | R 1 | **003H6904** |
| | | 32 | | R 1¼ | **003H6905** |
| | | 40 | | R 1½ | **065B2004** |
| | | 50 | | R 2 | **065B2005** |
| 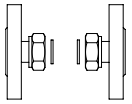 | Flange tailpieces | 15 | Flanges PN 25, acc. to EN 1092-2 | | **003H6915** |
| | | 20 | | | **003H6916** |
| | | 25 | | | **003H6917** |

### **Accessories** for thermostats

| Picture | Type designation | PN | For controllers | Material | Code No. |
|---|---|---|---|---|---|
|  | Immersion pocket | 25 | AVT/VG(F) DN 15-25 | Brass | **065-4414** [1] |
| | | | | Stainless steel, mat. No. 1.4571 | **065-4415** [1] |
| | | | AVT/VG(F) DN 32-50 STM/VG(F) DN 15-50 | Brass | **065-4416** [1] |
| | | | | Stainless steel, mat. No. 1.4435 | **065-4417** [1] |
| | Combination piece K2 | | | | **003H6855** |
| | Combination piece K3 | | | | **003H6856** |

[1] *Not for AVT thermostatic actuator code numbers:* ***065-0604, 065-0605, 065-0606, 065-0607***


© Danfoss | 2020.07

## Ordering *(continuous)*

### Service kits

| Picture | Type designation | DN (mm) | $k_{VS}$ ($m^3/h$) | Code No. |
|---|---|---|---|---|
| | Valve insert | 15 | 0.4 | **003H6869** |
| | | | 1.0 | **003H6870** |
| | | | 1.6 | **003H6871** |
| | | | 2.5 | **003H6872** |
| | | | 4.0 | **003H6873** |
| | | 20 | 6.3 | **003H6874** |
| | | 25 | 8.0 | **003H6875** |
| | | 32 / 40 / 50 | 12.5 / 16 / 20 / 25 | **003H6876** |
| | Housing of sensor stuffing box | **for sensors** | | |
| | | AVT 170 R ½ | | **065-4420** |
| | | AVT 210, 255 R ¾ | | **065-4421** |

## Technical data

### VG, VGF valves

| Nominal diameter | | DN | 15 | | | | | 20 | 25 | 32 | 40 | 50 |
|---|---|---|---|---|---|---|---|---|---|---|---|---|
| $k_{VS}$ value | | $m^3/h$ | 0.4 | 1.0 | 1.6 | 2.5 | 4.0 | 6.3 | 8 | 12.5 | 16/20 [1] | 20/25 [1] |
| Stroke | | | 3 | | 5 | | | | | 10 | | |
| Control ratio | | | > 1:50 | | | | | | | | | |
| Control characteristic | | | linear | | | | | | | | | |
| Cavitation factor z | | | ≥ 0.6 | | | | | | ≥ 0.55 | | ≥ 0.5 | |
| Leakage acc. to standard IEC 534 | | % of $k_{VS}$ | ≤ 0.02 | | | | | | | ≤ 0.05 | | |
| Nominal pressure | | PN | 25 | | | | | | | | | |
| Max. differential pressure | | bar | 20 | | | | | | | 16 | | |
| Medium | | | Circulation water / glycolic water up to 30 % | | | | | | | | | |
| Medium pH | | | Min. 7, max. 10 | | | | | | | | | |
| Medium temperature | | °C | 2 … 150 | | | | | | | | | |
| Connections | valve | | External thread | | | | | | | | | |
| | | | - | | | | Flange | | | | | |
| | tailpieces | | Weld-on and external thread | | | | | | | | | |
| | | | Flange | | | | | | | - | | |
| **Materials** | | | | | | | | | | | | |
| Valve body | thread | | Red bronze CuSn5ZnPb (Rg5) | | | | | | | Ductile iron EN-GJS-400-18-LT (GGG 40.3) | | |
| | flange | | - | | | | Ductile iron EN-GJS-400-18-LT (GGG 40.3) | | | | | |
| Valve seat | | | Stainless steel, mat. No. 1.4571 | | | | | | | | | |
| Valve cone | | | Dezincing free brass CuZn36Pb2As | | | | | | | | | |
| Sealing | | | EPDM | | | | | | | | | |
| Pressure relieve system | | | Piston | | | | | | | | | |

[1] *Flange valve body*

### STM Safety temperature monitor (actuator)

| | | | |
|---|---|---|---|
| Limit range $X_s$ | | °C | 20 … 75 / 40 … 95 / 30 … 110 |
| Time constant T acc. to EN 14597 | | s | max. 100 |
| Gain $K_s$ | | mm/°K | 0.3 |
| Max. adm. temperature at sensor | | | 80 °C above maximum setpoint |
| Max. amb. temperature at thermostat | | °C | 0 … 70 |
| Nominal pressure sensor | | PN | 25 |
| Nominal pressure immersion pocket | | | |
| Capillary tube length | | m | 5 |
| **Materials** | | | |
| Temperature sensor | | | Cooper |
| Immersion pocket | Ms design | | Brass, nickel-plated |
| | Stainless steel design | | mat. No. 1.4435 |
| Handle for temp. setting | | | Polyamide, glass fiber-reinforced |
| Scale carrier | | | Polyamide |

## Technical data *(continuous)*

**AVT** Thermostatic actuator

| | | |
|---|---|---|
| Setting range $X_s$ | °C | –10 … 40 / 20 … 70 / 40 … 90 / 60 … 110<br>10 … 45 / 35 … 70 / 60 … 100 / 85 … 125 |
| Time constant T acc. to EN 14597 | s | max. 50 (170 mm, 210 mm), max. 30 (255 mm) |
| Gain $K_s$ | mm/°K | 0.2 (170 mm); 0.3 (210 mm); 0.7 (255 mm) |
| Max. adm. temperature at sensor | | 50 °C above maximum setpoint |
| Max. amb. temperature at thermostat | °C | 0 … 70 |
| Nominal pressure sensor | PN | 25 |
| Nominal pressure immersion pocket | | |
| Capillary tube length | m | 5 (170 mm, 210 mm), 4 m (255 mm) |
| **Materials** | | |
| Temperature sensor | | Cooper |
| Immersion pocket [1] | Ms design | Brass, nickel-plated |
| | Stainless steel design | Mat. No. 1.4571 (170 mm), mat. No. 1.4435 (210 mm) |
| Handle for temp. setting | | Polyamide, glass fiber-reinforced |
| Scale carrier | | Polyamide |

[1] *for sensor 170 and 210 mm*

## Application principles

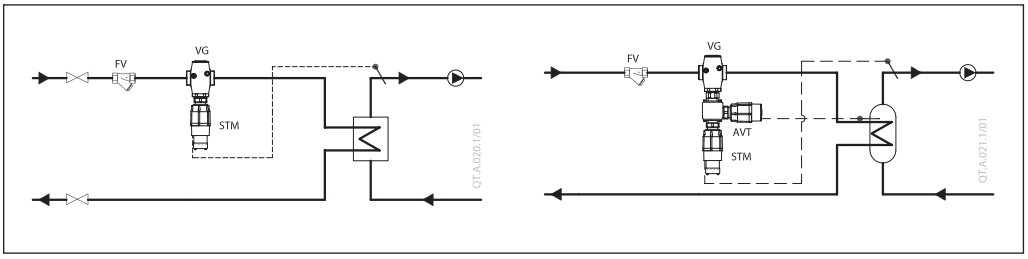


## Combinations

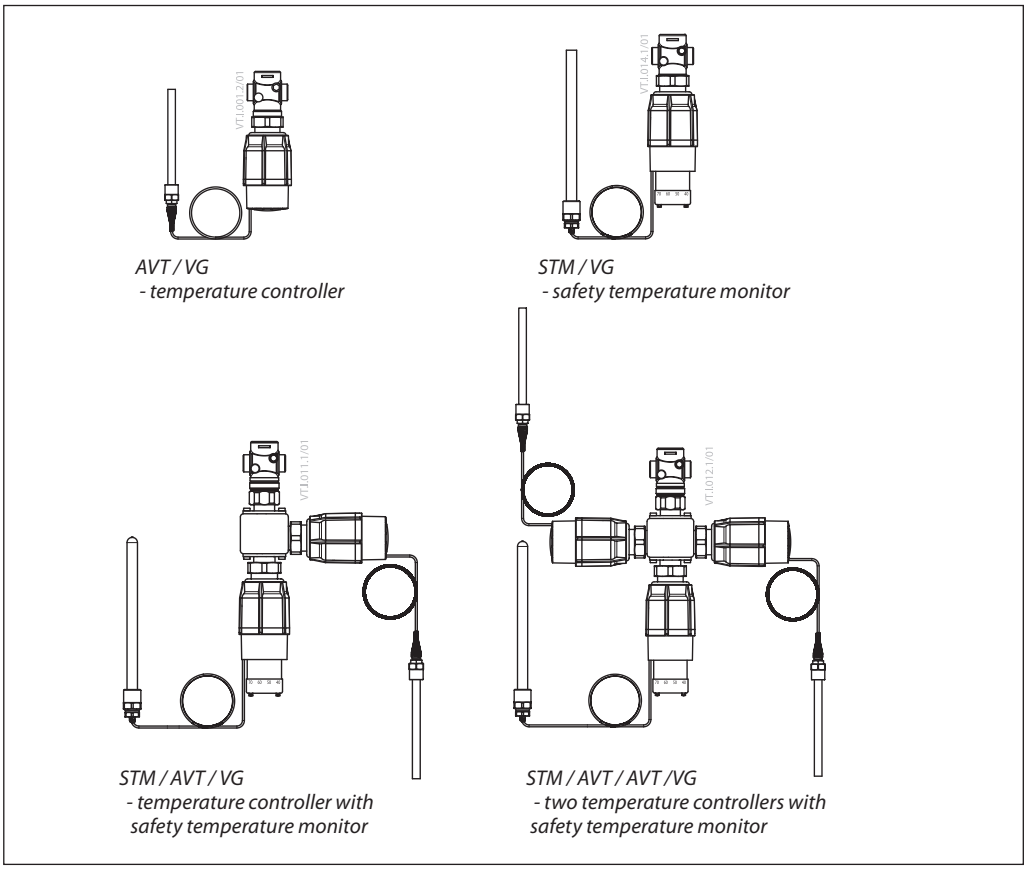



© Danfoss | 2020.07

## Installation positions

*Temperature controller and safety temperature monitor*
Temperature controller AVT / VG(F) and safety temperature monitor STM / VG(F) can be installed in any position.

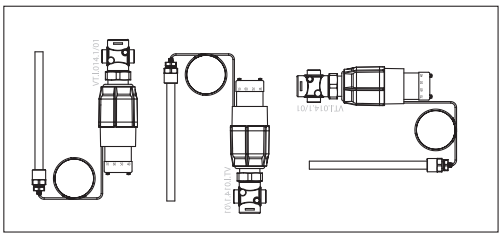

*Temperature sensor*
The place of installation must be chosen in a way that the temperature of the medium is directly taken without any delay. Avoid overheating of temperature sensor. The temperature sensor must be immersed into the medium in its full length.

Temperature sensors 170 mm R½ and 210 mm R¾
- The temperature sensor may be installed in any position.

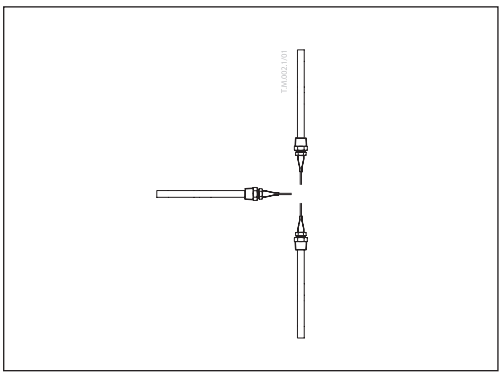

Temperature sensor 255 mm R¾
- The temperature sensor must be installed as shown on the picture.

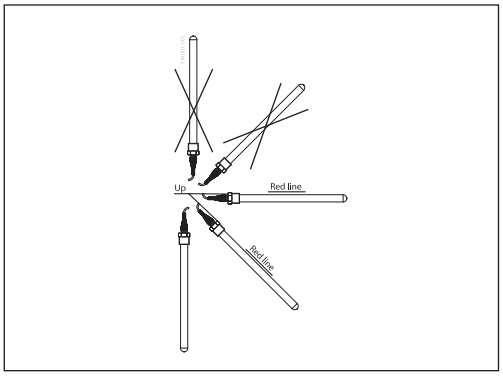


## Pressure temperature diagram

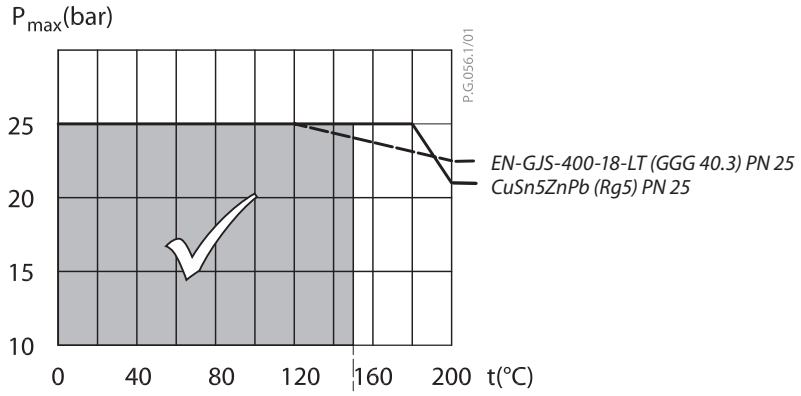


*Maximum allowed operating pressure as a function of medium temperature (according to EN 1092-2 and EN 1092-3).*

## Valve sizing

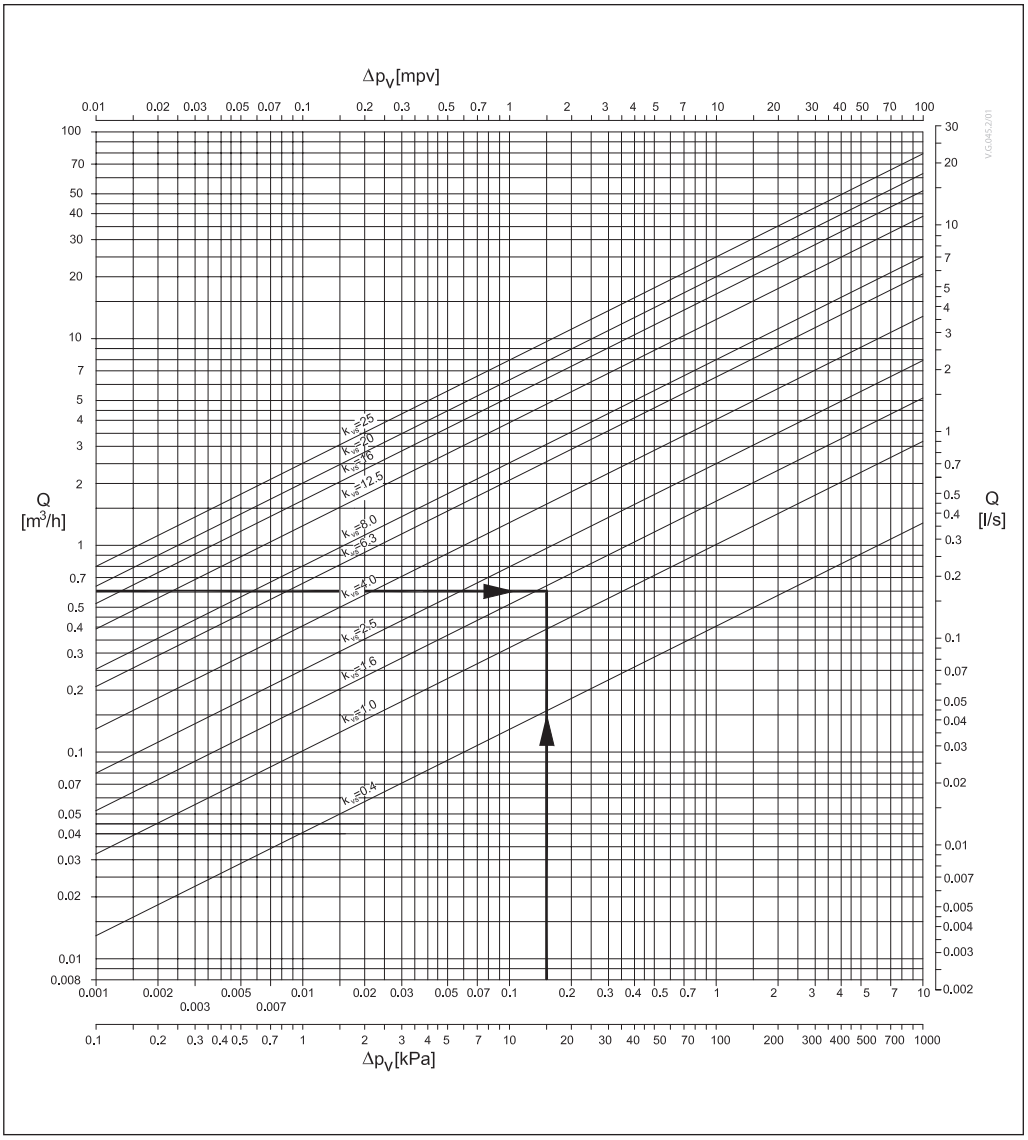


***Given data:***
$P_{max}$ = 14 kW
$\Delta t$ = 20 K
$\Delta p_v$ = 0.15 bar

$P_{max}$ - heating power (kW)
$\Delta t$ -temperature difference (K)
$\Delta p_v$ - differential pressure across the valve

Maximum flow $Q_{max}$ ($m^3/h$) through the valve is calculated according to formula:

$$Q_{max} = \frac{P_{max} \times 0.86}{\Delta t} = \frac{14 \times 0.86}{20}$$

$Q_{max}$ = 0.6 $m^3/h$

$k_v$ value is calculated according to formula:

$$k_v = \frac{Q_{max}}{\sqrt{\Delta p_V}} = \frac{0.6}{\sqrt{0.15}}$$

$k_v$ = 1.5 $m^3/h$

Chosen $k_{VS}$ = 1.6 $m^3/h$

or read from the sizing diagram by taking a line through Q scale (0.6 $m^3/h$) and $\Delta p_v$ scale (0.15 bar) to intersect $k_v$-scale at 1.5 $m^3/h$

Chosen $k_{vs}$ = 1.6 $m^3/h$

***Solution:***
The example selects:
1) ext. thread valve VG DN 15, $k_{VS}$ value 1.6 or
2) flange valve VGF DN 15, $k_{VS}$ value 1.6


© Danfoss | 2020.07

## Design

***STM / VGF***

1. Valve VG(F)
2. Valve insert
3. Pressure relieved valve cone
4. Valve stem
5. Union nut
6. Safety temp. monitor STM
7. Thermostat stem
8. Setting spring for temperature control
9. Handle for limit setting, prepared for sealing
10. Scale carrier
11. Capillary tube
12. Temperature sensor
13. Immersion pocket
14. Safety spring

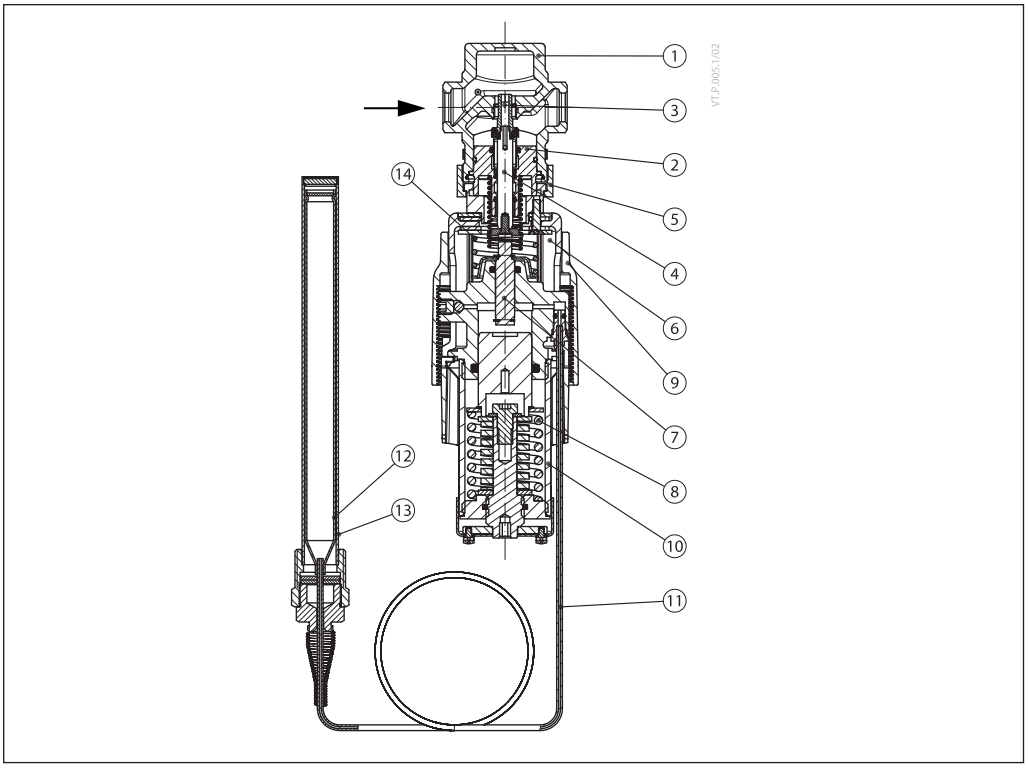


***AVT / VG(F)***

1. Valve VG(F)
2. Valve insert
3. Pressure relieved valve cone
4. Valve stem
5. Union nut
6. Thermostatic actuator AVT
7. Thermostat stem
8. Bellows
9. Setting spring for temperature control
10. Handle for temperature setting, prepared for sealing
11. Scale carrier
12. Capillary tube
13. Flexible protected pipe (only at AVT 255 mm)
14. Temperature sensor
15. Immersion pocket
16. Sensor stuffing box
17. Housing of sensor stuffing box

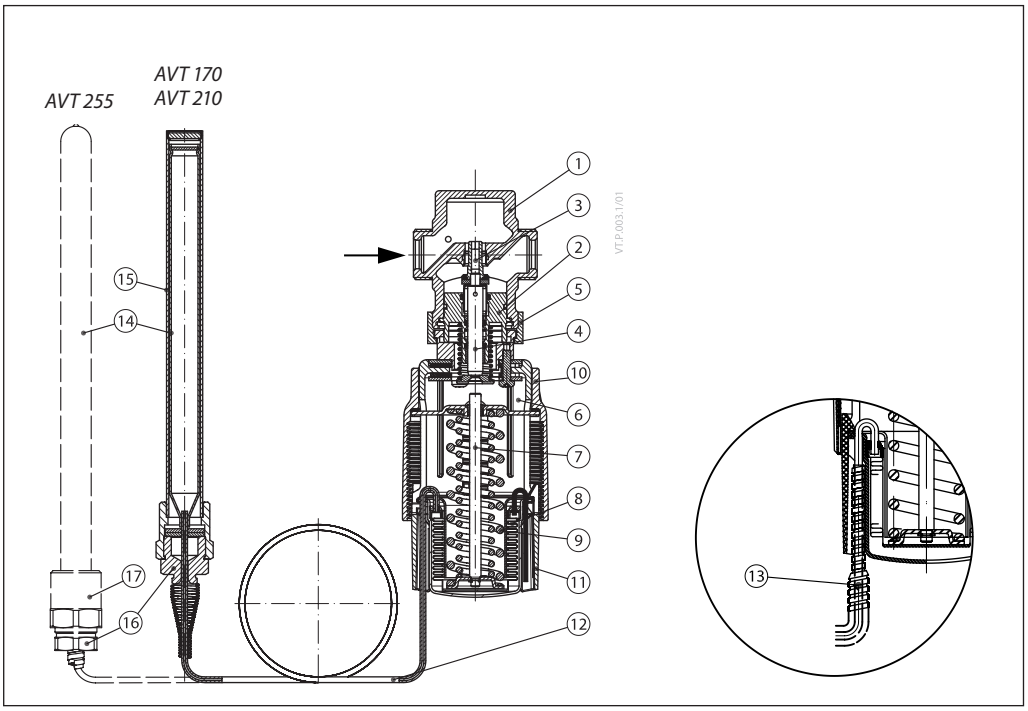

## Function

*Mode of Operation*

The safety temperature monitor is proportional temperature controller which controls temperature and protects the system against exceeding temperatures. The valve cone is soft sealed and pressure relieved.

*Safety Temperature Monitor (STM/VG(F))*

- Function
  In case the temperature at the temperature sensor exceeds the adjusted set point, safety temperature monitor interrupts energy supply by closing the valve. As soon as the temperature at the temperature sensor drops, the valve opens automatically.

  Handle for limit setting can be sealed.

- Extended safety function
  If there is a leakage in the area of the temperature sensor, the capillary tube, or the thermostat, the valve closes by a safety spring in the safety thermostat. In this case safety temperature monitor (actuator) must be replaced.
- Physical Function Principle
  The safety temperature monitor operates in accordance with the liquid expansion principle. The temperature sensor, the capillary tube and the bellows are filled with liquid. As the temperature at the temperature sensor rises, the liquid expands, the thermostat stem moves out and closes the valve.

*Temperature Controller (AVT/VG(F))*

- Function
  By increasing of medium temperature valve cone moves towards the seat (valve closes), by decreasing of medium temperature valve cone moves away from the seat (valve opens).

  Handle for temperature setting can be sealed.

- Physical Function Principle
  Medium temperature changes cause pressure changes in temperature sensor. Resulting pressure is being transferred through the capillary tube to the bellows. Bellows moves thermostat stem and opens or closes the valve.

## Settings

*Temperature setting (AVT)*

Temperature setting is being done by the adjustment of the setting spring for temperature control. The adjustment can be done by means of handle for temperature setting and/or temperature indicators.

*Limit setting (STM / VG(F)*

Limit setting is being done by the adjustment of the setting spring for temperature control. The adjustment can be done by means of handle for limit setting and/or temperature indicators.

## Adjustment diagram

*Temperature setting*

Relation between scale numbers 1-5 and closing temperature.

***Note:*** *The values given are approximate*

*AVT Thermostat ... 170 mm, 210 mm*

| I | II | III | IIII | IIIII | |
|---|---|---|---|---|---|
| -10 | 3 | 15 | 28 | 40 | °C |
| 20 | 33 | 45 | 58 | 70 | |
| 40 | 53 | 65 | 78 | 90 | |
| 60 | 73 | 85 | 98 | 110 | |

*AVT Thermostat ... 255 mm*

| I | II | III | IIII | IIIII | |
|---|---|---|---|---|---|
| 10 | 19 | 28 | 36 | 45 | °C |
| 35 | 44 | 53 | 61 | 70 | |
| 60 | 70 | 80 | 90 | 100 | |
| 85 | 95 | 105 | 115 | 125 | |

***Note:***
*STM Safety temperature monitor (actuator):*
*temperature scale is already written on the product*


© Danfoss | 2020.07

## Dimensions

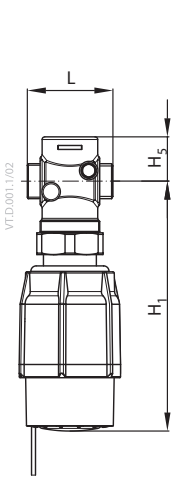


*AVT/VG DN15-50*

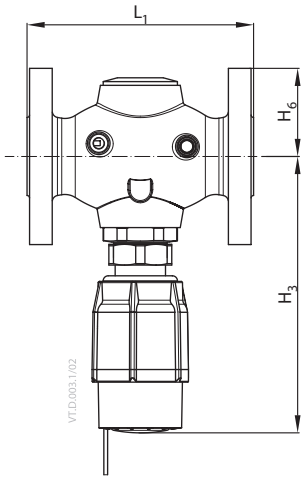


*AVT/VGF DN 15-50*

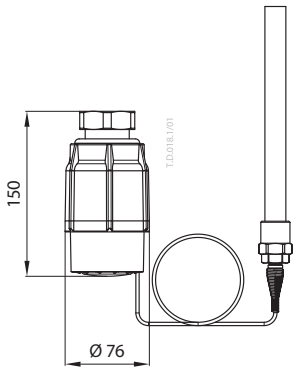


*AVT*

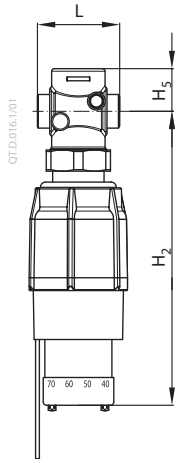


*STM/VG DN15-50*

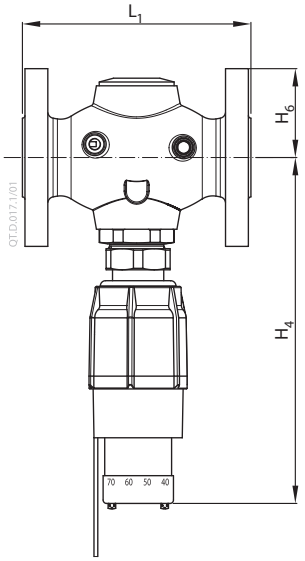


*STM/VGF DN15-50*

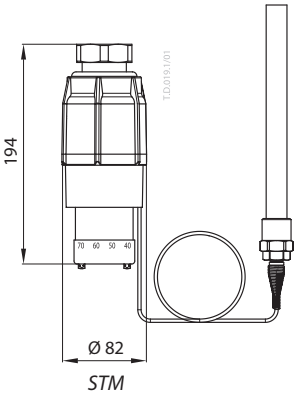


*STM*

| DN | L | $L_1$ | $H_1$ | $H_2$ | $H_3$ | $H_4$ | $H_5$ | $H_6$ |
|---|---|---|---|---|---|---|---|---|
| 15 | 65 | 130 | 180 | 224 | 229 | 274 | 34 | 47 |
| 20 | 70 | 150 | 180 | 224 | 229 | 274 | 34 | 52 |
| 25 | 75 | 160 | 180 | 224 | 229 | 274 | 37 | 57 |
| 32 | 100 | 180 | 221 | 266 | 221 | 266 | 62 | 70 |
| 40 | 110 | 200 | 221 | 266 | 221 | 266 | 62 | 75 |
| 50 | 130 | 230 | 221 | 266 | 221 | 266 | 62 | 82 |

### AVT, STM

| Type | | Weight | |
|---|---|---|---|
| | | AVT | STM |
| sensor 170 mm | kg | 1.4 | - |
| sensor 210 mm | | 1.5 | 2.6 |
| sensor 255 mm | | 1.6 | - |

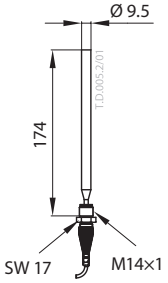


*AVT 170*

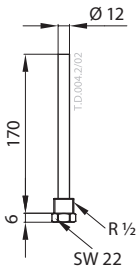


*AVT 170*
*Immersion pocket*

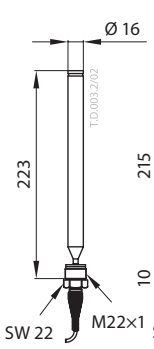


*AVT 210 / STM*

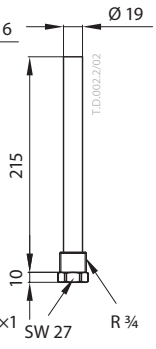


*AVT 210 / STM*
*Immersion pocket*

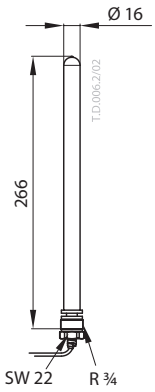


*AVT 255*

**Dimensions** *(continuous)*

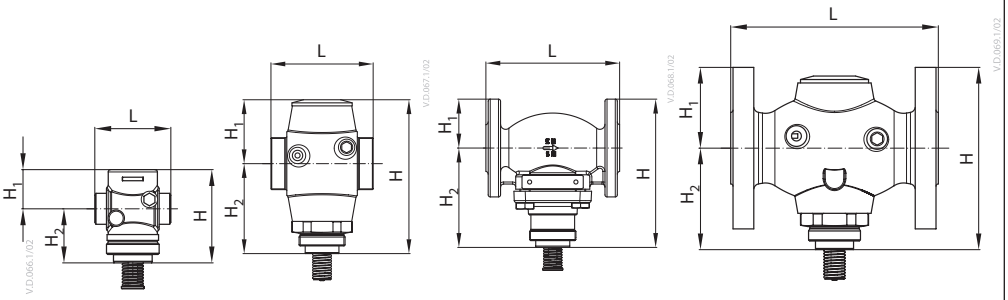


*VG DN 15-25* *VG DN 32-50* *VGF DN 15-25* *VGF DN 32-50*

**VG**

| DN | L | H | $H_1$ | $H_2$ | Weight (kg) |
|---|---|---|---|---|---|
| | mm | | | | |
| 15 | 65 | 80 | 34 | 46 | 0.7 |
| 20 | 70 | 80 | 34 | 46 | 0.8 |
| 25 | 75 | 83 | 37 | 46 | 0.9 |
| 32 | 100 | 151 | 63 | 88 | 3.0 |
| 40 | 110 | 151 | 63 | 88 | 3.1 |
| 50 | 130 | 151 | 63 | 88 | 3.8 |

**VGF**

| DN | L | H | $H_1$ | $H_2$ | Weight (kg) |
|---|---|---|---|---|---|
| | mm | | | | |
| 15 | 130 | 144 | 48 | 96 | 3.3 |
| 20 | 150 | 149 | 53 | 96 | 4.1 |
| 25 | 160 | 154 | 58 | 96 | 4.7 |
| 32 | 180 | 158 | 70 | 88 | 7.5 |
| 40 | 200 | 163 | 75 | 88 | 9.0 |
| 50 | 230 | 171 | 83 | 88 | 11.1 |

***Note**: other flange dimensions - see table for tailpieces*

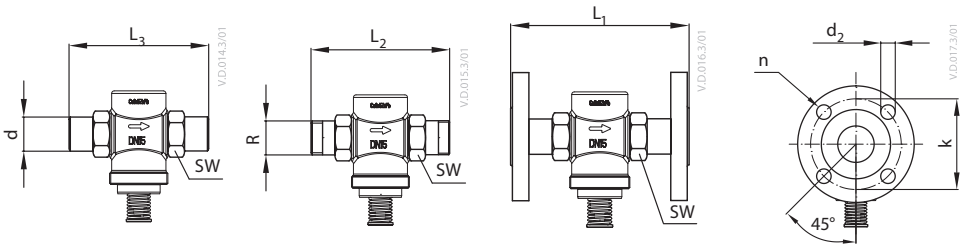


| DN | R [1] | SW | d | $L_1$ [2] | $L_2$ | $L_3$ | k | $d_2$ | n |
|---|---|---|---|---|---|---|---|---|---|
| | | mm | | | | | | | |
| 15 | ½ | 32 (G ¾A) | 21 | 130 | 131 | 139 | 65 | 14 | 4 |
| 20 | ¾ | 41 (G 1A) | 26 | 150 | 144 | 154 | 75 | 14 | 4 |
| 25 | 1 | 50 (G 1¼A) | 33 | 160 | 160 | 159 | 85 | 14 | 4 |
| 32 | 1¼ | 63 (G 1¾A) | 42 | - | 177 | 184 | 100 | 18 | 4 |
| 40 | 1 ½ | 70 (G 2A) | 47 | - | 195 | 204 | 110 | 18 | 4 |
| 50 | 2 | 82 (G 2½A) | 60 | - | 252 | 234 | 125 | 18 | 4 |

*[1] Conical ext. thread acc. to EN 10226-1*
*[2] Flanges PN 25, acc. to EN 1092-2*

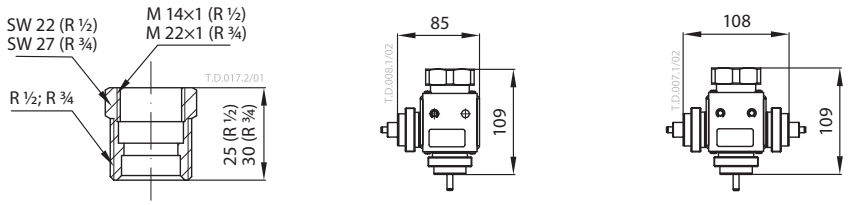


*Housing of sensor stuffing box* *Combination piece K2* *Combination piece K3*

 © Danfoss | 2020.07